WTC
DRAWING BOOK 6
AB 1–0 —AB 1–11

Cover
Stock
@ 8½ x 11

SKILLING - HELLE - CHRISTIANSEN - ROBERTSON Structural & Civil Engineers

PROJECT THE WORLD TRADE CENTER | TITLE DRAWING BOOK 6 | DATE

REVISIONS

WTCI-20-LERA

6-AB1-

Connection Details 200-399 & 700-799
(See 6-AB1-0 for index)

6-AB2-

Connection Details 100-199 & 400-599
(See 6-AB2-0 for index)

6-AB3-

Horizontal Bracing & Bridging Details
Beam Framed Floors
(See 6-AB3-0 for index)

6-AB4-

Louver Wall Struts
(See 6-AB4-0 for index)

6-AB5-

Vertical Bracing
(See 6-AB5-0 for index)

6-A6- & 6-B6-

Interior Columns to Floor 1
(See 6-AB6-1 for index)

FOR TWR A+B INTERIOR COLUMNS TO FLOOR 1 (NOT IN CORE)

6-AB7-

Anchors to Slabs
(See 6-AB7-0 for index)

6-AB8-

Perimeter Core Truss Seats & Shear Studs
(See 6-AB8-1 for index)

6-AB9-

Temporary Framing for Elevator 6 & 7
(See 6-AB9-0 for index)

Panel Schedules
Tower B
B1-300 - B1-508

Note: See 6-AB0- for latest date for each page

LESLIE E. ROBERTSON REGISTERED PROFESSIONAL ENGINEER No. 34360 UNIVERSITY OF THE STATE OF NEW YORK

SKILLING, HELLE, CHRISTIANSEN, ROBERTSON — Structural & Civil Engineers

PROJECT: THE WORLD TRADE CENTER | TITLE: DRAWING BOOK 6 - BEAM CONNECTIONS & MISC. DETAILS | DATE: 10/ 6/72

REVISIONS

PRINTED 5/18/73

6-AB0-	0	5/18/73	6-AB1-	15.1	10/ 2/67	6-AB1-	40	12/ 7/67	6-AB1-	56.5	9/18/68
6-AB0-	0.1	5/18/73	6-AB1-	15.2	4/17/68	6-AB1-	40.1	7/28/67	6-AB1-	57	10/ 2/67
6-AB0-	0.2	5/18/73	6-AB1-	15.3	4/17/68	6-AB1-	41	9/18/68	6-AB1-	58	10/ 5/67
6-AB0-	0.3	5/18/73	6-AB1-	16	10/ 5/67	6-AB1-	41.1	9/18/68	6-AB1-	59	5/ 6/68
6-AB0-	0.4	5/18/73	6-AB1-	17	9/15/67	6-AB1-	41.2	2/ 9/68	6-AB1-	59.1	7/28/67
6-AB0-	0.5	5/18/73	6-AB1-	17.1	10/ 2/67	6-AB1-	41.3	3/11/68	6-AB1-	59.2	7/17/68
6-AB1-	0	5/ 1/69	6-AB1-	17.2	10/ 2/67	6-AB1-	41.4	2/ 9/68	6-AB1-	59.3	9/17/68
6-AB1-	0.1	5/ 1/69	6-AB1-	18	12/21/67	6-AB1-	42	12/21/67	6-AB1-	60	12/
6-AB1-	0.2	5/ 1/69	6-AB1-	20	7/28/67	6-AB1-	42.1	12/21/67	6-AB1-	60.1	[illegible]
6-AB1-	0.3	5/ 1/69	6-AB1-	20.1	7/28/67	6-AB1-	43	10/ 5/67	6-AB1-	61	[illegible]
6-AB1-	1	7/28/67	6-AB1-	20.2	7/ 5/67	6-AB1-	44	8/14/67	6-AB1-	62	[illegible]
6-AB1-	2	12/21/67	6-AB1-	21	9/15/67	6-AB1-	44.1	8/14/67	6-AB1-	62.1	11/23/67
6-AB1-	2.1	12/21/67	6-AB1-	21.1	11/16/67	6-AB1-	44.2	2/ 9/68	6-AB1-	63	11/23/67
6-AB1-	2.2	10/ 5/67	6-AB1-	22	10/ 5/67	6-AB1-	44.3	10/ 2/67	6-AB1-	64	11/23/67
6-AB1-	2.3	10/ 5/67	6-AB1-	23	10/ 5/67	6-AB1-	44.4	10/ 2/67	6-AB1-	65	10/ 2/67
6-AB1-	2.4	9/25/68	6-AB1-	23.1	7/28/67	6-AB1-	44.5	2/ 9/68	6-AB1-	65.1	10/ 2/67
6-AB1-	2.5	10/31/67	6-AB1-	24	8/ 5/67	6-AB1-	44.6	2/ 9/68	6-AB1-	65.3	7/28/67
6-AB1-	2.6	7/14/69	6-AB1-	24.1	10/ 2/67	6-AB1-	44.7	9/18/68	6-AB1-	65.4	4/17/68
6-AB1-	5	12/21/67	6-AB1-	25	8/14/67	6-AB1-	44.8	9/18/68	6-AB1-	66	8/ 5/67
6-AB1-	5.1	11/10/67	6-AB1-	25.1	10/ 2/67	6-AB1-	45	10/ 2/67	6-AB1-	67	10/31/67
6-AB1-	5.2	11/23/67	6-AB1-	25.2	10/ 2/67	6-AB1-	45.1	10/ 2/67	6-AB1-	68	11/23/67
6-AB1-	5.3	11/10/67	6-AB1-	26	11/20/68	6-AB1-	46	10/ 2/67	6-AB1-	69	10/ 5/67
6-AB1-	5.4	12/21/67	6-AB1-	26.1	10/ 2/67	6-AB1-	47	10/ 5/67	6-AB1-	70	10/ 2/67
6-AB1-	6	9/15/67	6-AB1-	27	9/15/67	6-AB1-	48	10/ 5/67	6-AB1-	70.1	2/ 9/68
6-AB1-	6.1	9/15/67	6-AB1-	27.1	9/15/67	6-AB1-	49	5/ 6/68	6-AB1-	70.2	1/24/68
6-AB1-	6.2	10/ 5/67	6-AB1-	27.2	2/ 9/68	6-AB1-	49.1	5/ 6/68	6-AB1-	71	11/27/68
6-AB1-	6.3	9/30/69	6-AB1-	27.3	10/31/67	6-AB1-	50	9/25/68	6-AB1-	72	11/10/67
6-AB1-	7	10/ 5/67	6-AB1-	27.4	11/10/67	6-AB1-	50.1	10/ 2/67	6-AB1-	72.1	11/10/67
6-AB1-	7.1	12/21/67	6-AB1-	27.5	9/15/67	6-AB1-	51	11/10/67	6-AB1-	73	11/16/67
6-AB1-	9	10/ 2/67	6-AB1-	27.6	11/10/67	6-AB1-	51.1	10/ 5/67	6-AB1-	74	7/20/67
6-AB1-	9.1	7/28/67	6-AB1-	27.7	10/31/67	6-AB1-	51.2	11/23/67	6-AB1-	75	11/10/67
6-AB1-	9.2	7/28/67	6-AB1-	27.8	2/ 9/68	6-AB1-	51.3	11/23/67	6-AB1-	75.1	9/15/67
6-AB1-	9.3	10/31/67	6-AB1-	28	10/ 2/67	6-AB1-	52	11/23/67	6-AB1-	76	8/ 5/67
6-AB1-	9.4	8/ 5/67	6-AB1-	28.1	10/ 2/67	6-AB1-	52.1	11/23/67	6-AB1-	76.1	8/ 5/67
6-AB1-	9.5	10/31/67	6-AB1-	29	7/28/67	6-AB1-	52.2	1/24/68	6-AB1-	77	8/ 5/67
6-AB1-	9.6	10/31/67	6-AB1-	29.1	7/28/67	6-AB1-	53	12/21/67	6-AB1-	77.1	9/18/68
6-AB1-	9.7	10/31/67	6-AB1-	30	VOID	6-AB1-	53*	12/21/67	6-AB1-	77.2	2/ 9/68
6-AB1-	9.8	10/31/67	6-AB1-	31	12/21/67	6-AB1-	53.1	12/21/67	6-AB1-	77.3	9/18/68
6-AB1-	9.9	10/ 2/67	6-AB1-	32	11/14/67	6-AB1-	53.1*	12/21/67	6-AB1-	77.4	9/18/68
6-AB1-	9.10	2/ 9/68	6-AB1-	33	5/ 6/68	6-AB1-	53.2	8/ 5/67	6-AB1-	78	2/21/68
6-AB1-	11	11/14/67	6-AB1-	33.1	11/21/67	6-AB1-	53.3	9/29/67	6-AB1-	78.1	10/ 2/67
6-AB1-	11.1	7/28/67	6-AB1-	34	10/ 5/67	6-AB1-	53.4	1/24/68	6-AB1-	81	11/14/67
6-AB1-	12	1/24/68	6-AB1-	35	11/23/67	6-AB1-	54	10/ 5/67	6-AB1-	81*	10/11/67
6-AB1-	13	9/15/67	6-AB1-	36	11/10/67	6-AB1-	55	12/ 7/67	6-AB1-	81*	12/ 7/67
6-AB1-	13.1	9/15/67	6-AB1-	36.1	11/10/67	6-AB1-	55.1	11/10/67	6-AB1-	81*	2/26/68
6-AB1-	13.2	9/15/67	6-AB1-	36.2	11/10/67	6-AB1-	56	9/15/67	6-AB1-	81.1	12/ 7/67
6-AB1-	13.3	9/15/67	6-AB1-	37	7/20/67	6-AB1-	56.1	8/14/67	6-AB1-	81.1*	10/11/67
6-AB1-	13.4	10/ 5/67	6-AB1-	38	11/23/67	6-AB1-	56.2	10/ 2/67	6-AB1-	81.1*	2/26/68
6-AB1-	13.5	10/ 5/67	6-AB1-	39	12/ 7/67	6-AB1-	56.3	9/18/68	6-AB1-	81.2	10/ 5/67
6-AB1-	15	10/ 2/67	6-AB1-	39.1	9/15/67	6-AB1-	56.4	10/ 2/67	6-AB1-	82	1/24/68
6-AB1-	15.1	10/ 2/67	6-AB1-	40	12/ 7/67	6-AB1-	56.5	9/18/68	6-AB1-	83	11/10/67
6-AB1-	15.2	4/17/68	6-AB1-	40.1	7/28/67	6-AB1-	57	10/ 2/67	6-AB1-	83*	2/26/68
6-AB1-	15.3	4/17/68	6-AB1-	41	9/18/68	6-AB1-	58	10/ 5/67	6-AB1-	83.1	11/10/67
6-AB1-	16	10/ 5/67	6-AB1-	41.1	9/18/68	6-AB1-	59	5/ 6/68	6-AB1-	83.1*	2/26/68
6-AB1-	17	9/15/67	6-AB1-	41.2	2/ 9/68	6-AB1-	59.1	7/28/67	6-AB1-	83.2	2/ 9/68
6-AB1-	17.1	10/ 2/67	6-AB1-	41.3	3/11/68	6-AB1-	59.2	7/17/68	6-AB1-	84	10/ 5/67
6-AB1-	17.2	10/ 2/67	6-AB1-	41.4	2/ 9/68	6-AB1-	59.3	9/17/68	6-AB1-	85	7/28/67
6-AB1-	18	12/21/67	6-AB1-	42	12/21/67	6-AB1-	60	12/	6-AB1-	85.1	7/28/67
6-AB1-	20	7/28/67	6-AB1-	42.1	12/21/67	6-AB1-	60.1	[illegible]	6-AB1-	86	8/14/67
6-AB1-	20.1	7/28/67	6-AB1-	43	10/ 5/67	6-AB1-	61	[illegible]	6-AB1-	86.1	8/14/67
6-AB1-	20.2	7/ 5/67	6-AB1-	44	8/14/67	6-AB1-	62	[illegible]	6-AB1-	87	8/14/67
6-AB1-	21	9/15/67	6-AB1-	44.1	8/14/67	6-AB1-	62.1	11/23/67	6-AB1-	88	2/21/68
6-AB1-	21.1	11/16/67	6-AB1-	44.2	2/ 9/68	6-AB1-	63	11/23/67	6-AB1-	89	12/ 7/67
6-AB1-	22	10/ 5/67	6-AB1-	44.3	10/ 2/67	6-AB1-	64	11/23/67	6-AB1-	89.1	8/ 5/67
6-AB1-	23	10/ 5/67	6-AB1-	44.4	10/ 2/67	6-AB1-	65	10/ 2/67	6-AB1-	90	2/ 9/68
6-AB1-	23.1	7/28/67	6-AB1-	44.5	2/ 9/68	6-AB1-	65.1	10/ 2/67	6-AB1-	90.1	7/28/67
6-AB1-	24	8/ 5/67	6-AB1-	44.6	2/ 9/68	6-AB1-	65.3	7/28/67	6-AB1-	90.2	7/ 5/67
6-AB1-	24.1	10/ 2/67	6-AB1-	44.7	9/18/68	6-AB1-	65.4	4/17/68	6-AB1-	90.3	7/28/67
6-AB1-	25	8/14/67	6-AB1-	44.8	9/18/68	6-AB1-	66	8/ 5/67	6-AB1-	90.4	9/15/67
6-AB1-	25.1	10/ 2/67	6-AB1-	45	10/ 2/67	6-AB1-	67	10/31/67	6-AB1-	90.5	7/28/67
6-AB1-	25.2	10/ 2/67	6-AB1-	45.1	10/ 2/67	6-AB1-	68	11/23/67	6-AB1-	90.6	5/ 6/68
6-AB1-	26	11/20/68	6-AB1-	46	10/ 2/67	6-AB1-	69	10/ 5/67	6-AB1-	90.7	10/ 2/67
6-AB1-	26.1	10/ 2/67	6-AB1-	47	10/ 5/67	6-AB1-	70	10/ 2/67	6-AB1-	90.8	10/ 2/67
6-AB1-	27	9/15/67	6-AB1-	48	10/ 5/67	6-AB1-	70.1	2/ 9/68	6-AB1-	90.9	2/ 9/68
6-AB1-	27.1	9/15/67	6-AB1-	49	5/ 6/68	6-AB1-	70.2	1/24/68	6-AB1-	90.10	12/21/67
6-AB1-	27.2	2/ 9/68	6-AB1-	49.1	5/ 6/68	6-AB1-	71	11/27/68	6-AB1-	90.11	2/ 9/68
6-AB1-	27.3	10/31/67	6-AB1-	50	9/25/68	6-AB1-	72	11/10/67	6-AB1-	91	11/10/67
6-AB1-	27.4	11/10/67	6-AB1-	50.1	10/ 2/67	6-AB1-	72.1	11/10/67	6-AB1-	91.1	11/10/67
6-AB1-	27.5	9/15/67	6-AB1-	51	11/10/67	6-AB1-	73	11/16/67	6-AB1-	92	11/14/67
6-AB1-	27.6	11/10/67	6-AB1-	51.1	10/ 5/67	6-AB1-	74	7/20/67	6-AB1-	92.1	12/21/67
6-AB1-	27.7	10/31/67	6-AB1-	51.2	11/23/67	6-AB1-	75	11/10/67	6-AB1-	93	11/10/67
6-AB1-	27.8	2/ 9/68	6-AB1-	51.3	11/23/67	6-AB1-	75.1	9/15/67	6-AB1-	93.1	11/10/67
6-AB1-	28	10/ 2/67	6-AB1-	52	11/23/67	6-AB1-	76	8/ 5/67	6-AB1-	93.2	12/21/67
6-AB1-	28.1	10/ 2/67	6-AB1-	52.1	11/23/67	6-AB1-	76.1	8/ 5/67	6-AB1-	94	7/28/67
6-AB1-	29	7/28/67	6-AB1-	52.2	1/24/68	6-AB1-	77	8/ 5/67	6-AB1-	94.1	7/28/67
6-AB1-	29.1	7/28/67	6-AB1-	53	12/21/67	6-AB1-	77.1	9/18/68	6-AB1-	94.2	8/ 5/67
6-AB1-	30	VOID	6-AB1-	53*	12/21/67	6-AB1-	77.2	2/ 9/68	6-AB1-	94.3	1/24/68
6-AB1-	31	12/21/67	6-AB1-	53.1	12/21/67	6-AB1-	77.3	9/18/68	6-AB1-	95	10/ 2/67
6-AB1-	32	11/14/67	6-AB1-	53.1*	12/21/67	6-AB1-	77.4	9/18/68	6-AB1-	96	7/20/67
6-AB1-	33	5/ 6/68	6-AB1-	53.2	8/ 5/67	6-AB1-	78	2/21/68	6-AB1-	97	10/ 5/67
6-AB1-	33.1	11/21/67	6-AB1-	53.3	9/29/67	6-AB1-	78.1	10/ 2/67	6-AB1-	98	10/ 2/67
6-AB1-	34	10/ 5/67	6-AB1-	53.4	1/24/68	6-AB1-	81	11/14/67	6-AB1-	99	11/10/67
6-AB1-	35	11/23/67	6-AB1-	54	10/ 5/67	6-AB1-	81*	10/11/67	6-AB1-	99.1	11/10/67
6-AB1-	36	11/10/67	6-AB1-	55	12/ 7/67	6-AB1-	81*	12/ 7/67	6-AB1-	99.2	11/17/67
6-AB1-	36.1	11/10/67	6-AB1-	55.1	11/10/67	6-AB1-	81*	2/26/68	6-AB1-	99.3	10/ 5/67
6-AB1-	36.2	11/10/67	6-AB1-	56	9/15/67	6-AB1-	81.1	12/ 7/67			
6-AB1-	37	7/20/67	6-AB1-	56.1	8/14/67	6-AB1-	81.1*	10/11/67			
6-AB1-	38	11/23/67	6-AB1-	56.2	10/ 2/67	6-AB1-	81.1*	2/26/68			
6-AB1-	39	12/ 7/67	6-AB1-	56.3	9/18/68	6-AB1-	81.2	10/ 5/67			
6-AB1-	39.1	9/15/67	6-AB1-	56.4	10/ 2/67	6-AB1-	82	1/24/68			

LICENSED PROFESSIONAL ENGINEER — LESLIE E. ROBERTSON — No. 34360 — STATE OF NEW YORK

6-AB0-0

REVISIONS

PRINTED 5/18/73

6-AB1-100	10/ 5/67	6-AB1-120.3	12/21/67	6-AB1-145	2/ 9/68	6-AB1-170	3/11/68	6-AB1-193	8/ 5/67
6-AB1-101	7/28/67	6-AB1-121	10/ 5/67	6-AB1-145.1	2/ 9/68	6-AB1-171	8/ 5/67	6-AB1-194	8/ 5/67
6-AB1-101.1	7/28/67	6-AB1-121.1	10/ 5/67	6-AB1-145.2	7/28/67	6-AB1-171.1	11/10/67	6-AB1-195	7/17/68
6-AB1-101.2	11/14/67	6-AB1-122	7/28/67	6-AB1-145.4	7/28/67	6-AB1-171.2	8/ 5/67	6-AB1-196	8/ 5/67
6-AB1-101.3	11/14/67	6-AB1-122.1	7/28/67	6-AB1-146	6/30/67	6-AB1-171.3	11/10/67	6-AB1-197	8/ 5/67
6-AB1-102	10/ 2/67	6-AB1-123	11/10/67	6-AB1-147	7/20/67	6-AB1-171.4	2/ 9/68	6-AB1-198	7/17/68
6-AB1-102.1	12/21/67	6-AB1-123.1	9/15/67	6-AB1-148	7/20/67	6-AB1-171.5	2/ 9/68	6-AB1-198.1	7/17/68
6-AB1-103	12/21/67	6-AB1-124	10/ 2/67	6-AB1-149	10/ 5/67	6-AB1-171.6	2/ 9/68	6-AB1-198.2	7/17/68
6-AB1-103.1	10/ 5/67	6-AB1-124.1	11/10/67	6-AB1-150	7/28/67	6-AB1-171.7	2/ 9/68	6-AB1-198.3	2/ 9/68
6-AB1-103.2	12/21/67	6-AB1-125	10/ 2/67	6-AB1-151	11/10/67	6-AB1-172	7/28/67	6-AB1-198.4	2/ 9/68
6-AB1-104	7/20/67	6-AB1-127	10/ 2/67	6-AB1-151.1	11/10/67	6-AB1-173	12/ 7/67	6-AB1-199	9/15/67
6-AB1-105	VOID	6-AB1-127.1	3/29/68	6-AB1-152	1/24/68	6-AB1-173.1	11/10/67		
6-AB1-106	7/20/67	6-AB1-128	11/10/67	6-AB1-152.1	12/21/67	6-AB1-174	VOID		
6-AB1-107	7/20/67	6-AB1-128.1	11/10/67	6-AB1-153	10/ 5/67	6-AB1-174.1	VOID		
6-AB1-108	9/15/67	6-AB1-129	11/10/67	6-AB1-154	11/14/67	6-AB1-175	11/10/67		
6-AB1-108.1	9/15/67	6-AB1-129.1	11/10/67	6-AB1-154.1	7/28/67	6-AB1-175.1	11/10/67		
6-AB1-108.2	1/24/68	6-AB1-129.2	1/24/68	6-AB1-154.2	10/ 5/67	6-AB1-176	10/ 2/67		
6-AB1-109	10/ 5/67	6-AB1-130	7/28/67	6-AB1-155	7/28/67	6-AB1-177	2/ 9/68		
6-AB1-110	11/10/67	6-AB1-131	11/10/67	6-AB1-155.1	7/28/67	6-AB1-177.1	8/ 5/67		
6-AB1-110*	12/ 8/67	6-AB1-131.1	11/10/67	6-AB1-155.2	2/ 9/68	6-AB1-177.2	2/ 9/68		
6-AB1-110.1	9/15/67	6-AB1-131.2	10/ 5/67	6-AB1-156	7/28/67	6-AB1-177.3	10/ 5/67		
6-AB1-110.2	1/24/68	6-AB1-132	7/28/67	6-AB1-156.1	7/28/67	6-AB1-177.4	2/ 9/68		
6-AB1-111	11/14/67	6-AB1-133	7/28/67	6-AB1-156.2	2/ 9/68	6-AB1-178	11/10/67		
6-AB1-111.1	11/10/67	6-AB1-134	7/20/67	6-AB1-156.3	3/11/68	6-AB1-178.1	11/10/67		
6-AB1-112	7/20/67	6-AB1-135	12/21/67	6-AB1-157	7/28/67	6-AB1-179	11/14/67		
6-AB1-113	11/10/67	6-AB1-136	6/30/67	6-AB1-157.1	7/ 5/67	6-AB1-179.1	11/14/67		
6-AB1-113.1	11/10/67	6-AB1-136.1	7/28/67	6-AB1-157.2	7/17/68	6-AB1-180	11/10/67		
6-AB1-113.2	11/10/67	6-AB1-137	10/ 2/67	6-AB1-157.3	7/28/67	6-AB1-180.1	11/10/67		
6-AB1-114	7/28/67	6-AB1-137.1	10/ 2/67	6-AB1-157.4	7/17/68	6-AB1-181	10/ 5/67		
6-AB1-114.1	8/ 5/67	6-AB1-138	7/28/67	6-AB1-158	11/10/67	6-AB1-181.1	10/ 5/67		
6-AB1-114.2	11/10/67	6-AB1-139	11/16/67	6-AB1-159	7/28/67	6-AB1-182	12/21/67		
6-AB1-114.3	11/10/67	6-AB1-140	VOID	6-AB1-159.1	7/28/67	6-AB1-183	8/14/67		
6-AB1-114.4	12/21/67	6-AB1-141	5/ 6/68	6-AB1-160	7/28/67	6-AB1-184	8/14/67		
6-AB1-115	11/10/67	6-AB1-141.1	11/10/67	6-AB1-160.1	7/28/67	6-AB1-184.1	9/29/67		
6-AB1-115.1	9/15/67	6-AB1-141.2	2/ 9/68	6-AB1-161	7/28/67	6-AB1-185	8/14/67		
6-AB1-116	9/15/67	6-AB1-142	10/ 2/67	6-AB1-161.1	7/28/67	6-AB1-186	8/14/67		
6-AB1-116.1	9/15/67	6-AB1-142.1	10/ 2/67	6-AB1-161.2	10/31/67	6-AB1-187	9/29/67		
6-AB1-117	7/28/67	6-AB1-142.2	11/17/67	6-AB1-162	8/ 5/67	6-AB1-188	11/23/67		
6-AB1-117.1	12/21/67	6-AB1-142.3	8/14/67	6-AB1-162.1	8/ 5/67	6-AB1-188.1	11/23/67		
6-AB1-117.2	2/ 9/68	6-AB1-142.4	9/15/67	6-AB1-164	10/ 5/67	6-AB1-188.2	10/ 5/67		
6-AB1-117.2*	12/ 8/67	6-AB1-142.5	11/10/67	6-AB1-164.1	10/ 2/67	6-AB1-189	8/14/67		
6-AB1-117.3	2/ 9/68	6-AB1-142.6	9/15/67	6-AB1-164.2	11/23/67	6-AB1-189.1	11/14/67		
6-AB1-117.4	4/17/68	6-AB1-142.7	11/10/67	6-AB1-165	10/ 2/67	6-AB1-189.2	8/14/67		
6-AB1-118	11/10/67	6-AB1-142.8	10/ 2/67	6-AB1-166	7/28/67	6-AB1-189.3	11/14/67		
6-AB1-118.1	11/10/67	6-AB1-142.9	7/17/68	6-AB1-165.1	10/31/67	6-AB1-189.4	11/14/67		
6-AB1-119	7/28/67	6-AB1-142.10	4/17/68	6-AB1-167	11/10/67	6-AB1-189.5	7/17/68		
6-AB1-119.1	7/28/67	6-AB1-143	7/20/67	6-AB1-167.1	11/10/67	6-AB1-189.6	7/17/68		
6-AB1-120	10/ 5/67	6-AB1-144	7/28/67	6-AB1-168	10/ 2/67	6-AB1-190	11/14/67		
6-AB1-120.1	10/ 5/67	6-AB1-144.1	8/ 5/67	6-AB1-169	10/31/67	6-AB1-191	8/ 5/67		
6-AB1-120.2	11/23/67	6-AB1-144.2	8/ 5/67	6-AB1-169.1	10/ 2/67	6-AB1-192	8/14/67		

LICENSED PROFESSIONAL ENGINEER — LESLIE E. ROBERTSON — No. 24360 — OF THE STATE OF NEW YORK

SKILLING, HELLE, CHRISTIANSEN, ROBERTSON — Structural & Civil Engineers

PROJECT	TITLE	DATE
THE WORLD TRADE CENTER	DRAWING BOOK 6 - BEAM CONNECTIONS & MISC. DETAILS	10/ 6/72

REVISIONS

PRINTER 5/18/73

6-AB1-200	11/10/67	6-AB1-232	6/30/67	6-AB1-307	8/14/67
6-AB1-200.1	11/10/67	6-AB1-233	6/30/67	6-AB1-307.1	8/14/67
6-AB1-200.2	11/10/67	6-AB1-234	6/30/67	6-AB1-308	8/14/67
6-AB1-202	11/10/67	6-AB1-235	2/ 9/68	6-AB1-308.1	8/14/67
6-AB1-202.1	11/10/67	6-AB1-235.1	2/ 9/68	6-AB1-309	8/14/67
6-AB1-202.2	2/ 9/68	6-AB1-236	2/ 9/68	6-AB1-309.1	8/14/67
6-AB1-202.3	1/24/68	6-AB1-237	8/14/67	6-AB1-309.2	8/14/67
6-AB1-203	9/29/67	6-AB1-238	2/ 9/68	6-AB1-309.3	8/14/67
6-AB1-204	9/29/67	6-AB1-239	8/14/67	6-AB1-310	8/14/67
6-AB1-205	10/ 2/67	6-AB1-240	7/17/68	6-AB1-310.1	8/14/67
6-AB1-205.1	10/ 5/67	6-AB1-241	7/17/68	6-AB1-310.2	8/14/67
6-AB1-205.2	9/27/68	6-AB1-242	2/ 9/68	6-AB1-310.3	8/14/67
6-AB1-206	10/ 5/67	6-AB1-243	2/ 9/68	6-AB1-311	8/14/67
6-AB1-206.1	2/ 9/68	6-AB1-244	7/17/68	6-AB1-311.1	8/14/67
6-AB1-206.2	2/ 9/68	6-AB1-245	8/14/67	6-AB1-312	9/29/67
6-AB1-207	6/30/67	6-AB1-246	8/14/67	6-AB1-312.1	9/29/67
6-AB1-208	6/30/67	6-AB1-247	8/14/67	6-AB1-313	8/14/67
6-AB1-208.1	2/ 9/68	6-AB1-248	8/14/67	6-AB1-314	1/10/69
6-AB1-209	6/30/67	6-AB1-249	2/ 9/68	6-AB1-315	1/10/69
6-AB1-209.1	3/11/68	6-AB1-249.1	2/ 9/68	6-AB1-500*	12/ 8/67
6-AB1-209.2	2/ 9/68	6-AB1-250	2/ 9/68		
6-AB1-210	6/30/67	6-AB1-251	8/14/67		
6-AB1-211	6/30/67	6-AB1-252	8/14/67		
6-AB1-211*	11/17/67	6-AB1-253	8/14/67		
6-AB1-211.1	2/ 9/68	6-AB1-254	8/14/67		
6-AB1-212	6/30/67	6-AB1-255	8/14/67		
6-AB1-213	6/30/67	6-AB1-256	8/14/67		
6-AB1-213*	11/17/67	6-AB1-257	8/14/67		
6-AB1-214	6/30/67	6-AB1-258	8/14/67		
6-AB1-215	2/ 9/68	6-AB1-259	3/11/68		
6-AB1-215.1	2/ 9/68	6-AB1-259.1	3/11/68		
6-AB1-216	6/30/67	6-AB1-260	2/ 9/68		
6-AB1-216.1	2/ 9/68	6-AB1-261	2/ 9/68		
6-AB1-217	6/30/67	6-AB1-262	2/ 9/68		
6-AB1-217.1	2/ 9/68	6-AB1-263	2/ 9/68		
6-AB1-218	7/17/68	6-AB1-264	2/ 9/68		
6-AB1-219	10/ 7/68	6-AB1-266	2/ 9/68		
6-AB1-220	6/30/67	6-AB1-267	2/ 9/68		
6-AB1-220.1	6/30/67	6-AB1-268	2/ 9/68		
6-AB1-221	6/30/67	6-AB1-269	2/ 9/68		
6-AB1-222	6/30/67	6-AB1-270	2/ 9/68		
6-AB1-223	6/30/67	6-AB1-271	2/ 9/68		
6-AB1-224	6/30/67	6-AB1-272	2/ 9/68		
6-AB1-225	10/ 7/68	6-AB1-301	7/17/68		
6-AB1-226	6/30/67	6-AB1-302	11/16/67		
6-AB1-227	6/30/67	6-AB1-303	7/17/68		
6-AB1-228	6/30/67	6-AB1-304	11/16/67		
6-AB1-229	2/ 9/68	6-AB1-305	8/ 5/67		
6-AB1-230	2/ 9/68	6-AB1-306	8/14/67		
6-AB1-231	6/30/67	6-AB1-306.1	8/14/67		

LICENSED PROFESSIONAL ENGINEER — LESLIE E. ROBERTSON — No. 34360 — THE STATE OF NEW YORK

SKILLING, HELLE, CHRISTIANSEN, ROBERTSON — Structural & Civil Engineers

PROJECT	THE WORLD TRADE CENTER	TITLE	DRAWING BOOK 6- BEAM CONNECTIONS &MISC. DETAILS	DATE	10/ 6/72

REVISIONS

PRINTED 5/16/73

6-AB2- 1	5/ 1/69	6-AB2- 37	3/29/68	6-AB2- 90.1	10/ 5/67	6-AB2-140	7/20/67	6-AB3- 4	8/29/68
6-AB2- 1.1	5/ 1/69	6-AB2- 38	1/24/68	6-AB2- 90.2	12/21/67	6-AB2-142	7/20/67	6-AB3- 5	8/29/68
6-AB2- 2	2/ 9/68	6-AB2- 39	3/29/68	6-AB2- 91	11/17/67	6-AB2-142.1	7/20/67	6-AB3- 6	8/29/68
6-AB2- 2.1	8/14/67	6-AB2- 40	1/24/68	6-AB2- 91.1	11/17/67	6-AB2-143	7/20/67	6-AB3- 7	12/20/67
6-AB2- 2.2	2/ 9/68	6-AB2- 40.1	3/29/68	6-AB2- 92	8/ 5/67	6-AB2-144	11/10/67	6-AB3- 8	8/29/68
6-AB2- 3	8/14/67	6-AB2- 41	3/11/68	6-AB2-101	8/ 5/67	6-AB2-145	9/29/67	6-AB3- 9	8/29/68
6-AB2- 3.1	2/ 9/68	6-AB2- 42	3/29/68	6-AB2-102	1/10/69	6-AB2-147	8/ 5/67	6-AB3- 10	8/29/68
6-AB2- 3.2	8/14/67	6-AB2- 43	3/29/68	6-AB2-103	5/ 7/68	6-AB2-148	8/ 5/67	6-AB3- 11	12/20/67
6-AB2- 4	8/14/67	6-AB2- 44	2/21/68	6-AB2-104	10/ 2/67	6-AB2-150	8/ 5/67	6-AB3- 11.1	8/29/68
6-AB2- 5	2/ 9/68	6-AB2- 45	2/21/68	6-AB2-105	1/24/68	6-AB2-151	10/ 5/67	6-AB3- 12	8/29/68
6-AB2- 7	10/ 2/67	6-AB2- 46	2/21/68	6-AB2-106	1/24/68	6-AB2-152	10/ 2/67	6-AB3- 13	8/29/68
6-AB2- 7.1	9/18/67	6-AB2- 47	2/21/68	6-AB2-107	2/21/68	6-AB2-152.1	8/ 5/67	6-AB3- 14	8/29/68
6-AB2- 7.2	9/15/67	6-AB2- 52	11/21/67	6-AB2-107.1	10/ 9/68	6-AB2-153	8/14/67	6-AB3- 15	8/29/68
6-AB2- 7.2*	12/21/67	6-AB2- 53	11/21/67	6-AB2-107.2	9/25/68	6-AB2-153.1	8/14/67	6-AB3- 16	8/29/68
6-AB2- 7.3	9/18/67	6-AB2- 54	11/21/67	6-AB2-107.3	9/25/68	6-AB2-154	10/ 2/67	6-AB3- 17	8/29/68
6-AB2- 7.4	11/10/67	6-AB2- 55	8/29/68	6-AB2-107.4	9/25/68	6-AB2-155	8/ 5/67	6-AB3- 18	8/29/68
6-AB2- 7.4*	12/13/67	6-AB2- 56	8/29/68	6-AB2-108	8/14/67	6-AB2-156	8/ 5/67	6-AB3- 19	8/29/68
6-AB2- 7.5	11/10/67	6-AB2- 57	11/21/67	6-AB2-109	12/21/67	6-AB2-156*	11/17/67	6-AB3- 20	8/29/68
6-AB2- 7.5*	12/21/67	6-AB2- 58	12/21/67	6-AB2-110	VOID	6-AB2-157	2/ 9/68	6-AB3- 20.1	8/29/68
6-AB2- 7.6	10/ 5/67	6-AB2- 59	8/17/68	6-AB2-111	11/10/67	6-AB2-158	5/ 7/68	6-AB3- 21	8/29/68
6-AB2- 8	10/31/67	6-AB2- 60	11/21/67	6-AB2-111.1	11/10/67	6-AB2-160	8/14/67	6-AB3- 22	8/29/68
6-AB2- 8.1	11/10/67	6-AB2- 61	11/21/67	6-AB2-111.2	11/10/67	6-AB2-162	2/ 9/68	6-AB3- 23	8/29/68
6-AB2- 8.2	10/ 2/67	6-AB2- 62	11/21/67	6-AB2-112	VOID	6-AB2-163	8/14/67	6-AB3- 24	8/29/68
6-AB2- 8.3	10/31/67	6-AB2- 73	8/14/67	6-AB2-113	1/24/68	6-AB2-164	10/ 5/67	6-AB3- 25	8/29/68
6-AB2- 8.4	10/ 2/67	6-AB2- 73.1	8/ 5/67	6-AB2-114	8/14/67	6-AB2-165	8/ 5/67	6-AB3- 30	12/20/67
6-AB2- 9	2/ 9/68	6-AB2- 73.2	8/14/67	6-AB2-114.1	2/ 9/68	6-AB2-166	8/ 5/67	6-AB3- 31	12/20/67
6-AB2- 10	2/ 9/68	6-AB2- 73.5	10/ 5/67	6-AB2-116	11/22/68	6-AB2-167	8/ 5/67	6-AB3- 32	12/20/67
6-AB2- 11	2/ 9/68	6-AB2- 74	11/17/67	6-AB2-117	2/21/68	6-AB2-168	9/29/67	6-AB3- 33	1/24/68
6-AB2- 11.1	2/ 9/68	6-AB2- 75	1/24/68	6-AB2-118	12/21/67	6-AB2-169	8/14/67	6-AB3- 34	8/17/68
6-AB2- 12	2/ 9/68	6-AB2- 75.1	1/24/68	6-AB2-119	VOID	6-AB2-170	8/14/67	6-AB3- 35	8/17/68
6-AB2- 13	7/28/67	6-AB2- 76	9/15/67	6-AB2-120	10/ 5/67	6-AB2-171	8/14/67	6-AB3- 36	8/17/68
6-AB2- 13.1	1/24/68	6-AB2- 77	8/ 5/67	6-AB2-121	11/10/67	6-AB2-172	8/14/67	6-AB3- 37	1/10/69
6-AB2- 13.2	9/15/67	6-AB2- 77.1	8/14/67	6-AB2-122	2/21/68	6-AB2-173	8/14/67	6-AB3- 38	1/10/69
6-AB2- 13.3	11/16/67	6-AB2- 78	10/ 2/67	6-AB2-123	10/31/67	6-AB2-174	8/14/67		
6-AB2- 13.3*	12/13/67	6-AB2- 80	10/ 2/67	6-AB2-123.1	7/17/68	6-AB2-175	7/17/68		
6-AB2- 13.4	11/10/67	6-AB2- 80.5	10/ 5/67	6-AB2-124	10/ 2/67	6-AB2-176	2/21/69	6-AB4- 1	5/ 1/69
6-AB2- 13.4*	12/13/67	6-AB2- 81	9/18/68	6-AB2-125	8/ 5/67	6-AB2-177	2/ 9/68	6-AB4- 2	12/20/67
6-AB2- 13.5	10/ 5/67	6-AB2- 82	10/ 2/67	6-AB2-126	11/23/67	6-AB2-178	4/17/68	6-AB4- 3	11/29/68
6-AB2- 13.6	10/31/67	6-AB2- 83	8/ 5/67	6-AB2-128	11/23/67	6-AB2-179	4/17/68	6-AB4- 4	12/20/67
6-AB2- 13.7	11/16/67	6-AB2- 83.1	7/17/68	6-AB2-130	9/15/67	6-AB2-180	7/17/68	6-AB4- 5	11/29/68
6-AB2- 14	VOID	6-AB2- 84	10/ 2/67	6-AB2-131	8/ 5/67	6-AB2-181	1/10/69	6-AB4- 6	11/29/68
6-AB2- 15	1/10/69	6-AB2- 85	10/ 2/67	6-AB2-132	10/ 5/67	6-AB2-183	7/17/68	6-AB4- 7	12/20/67
6-AB2- 25	11/ 7/67	6-AB2- 85.1	9/25/68	6-AB2-133	1/24/68	6-AB2-184	11/22/68	6-AB4- 8	11/29/68
6-AB2- 30	12/18/67	6-AB2- 85.2	9/25/68	6-AB2-134	9/29/67	6-AB2-197	8/29/68	6-AB4- 9	8/29/68
6-AB2- 31	12/18/67	6-AB2- 86	9/15/67	6-AB2-135	6/30/67	6-AB2-198	10/ 2/67	6-AB4- 10	11/29/68
6-AB2- 32	1/24/68	6-AB2- 86.1	2/12/68	6-AB2-136	10/ 5/67			6-AB4- 11	12/20/67
6-AB2- 33	1/24/68	6-AB2- 87	10/ 2/67	6-AB2-137	10/ 5/67			6-AB4- 12	11/29/68
6-AB2- 34	1/24/68	6-AB2- 88	10/ 2/67	6-AB2-138	9/15/67	6-AB3- 1	5/ 1/69	6-AB4- 13	11/29/68
6-AB2- 35	1/24/68	6-AB2- 89	10/ 2/67	6-AB2-139	7/20/67	6-AB3- 2	8/29/68	6-AB4- 14	VOID
6-AB2- 36	1/24/68	6-AB2- 90	10/ 5/67	6-AB2-139.1	7/20/67	6-AB3- 3	8/29/68	6-AB4- 15	VOID

LICENSED PROFESSIONAL ENGINEER — LESLIE E. ROBERTSON — No. 34500 — THE STATE OF NEW YORK

6-A50-0.3

SKILLING, HELLE, CHRISTIANSEN, ROBERTSON — Structural & Civil Engineers

PROJECT: THE WORLD TRADE CENTER | TITLE: DRAWING BOOK 6- BEAM CONNECTIONS & MISC. DETAILS | DATE: 11/26/71

REVISIONS

PRINTED 5/18/73

6-AB4-	16	VOID	6-AB5-	30.1	12/14/67	6-AB5-	67	9/29/67	6- B5-110		2/ 9/68
6-AB4-	17	VOID	6-AB5-	31	12/14/67	6-AB5-	68	9/15/67	6- B5-111		2/ 9/68
6-AB4-	18	12/20/67	6-AB5-	31.1	12/14/67	6-AB5-	69	10/ 4/67	6- B5-112		3/11/68
6-AB4-	19	12/20/67	6-AB5-	32	12/14/67	6-AB5-	70	9/15/67	6- B5-113		3/11/68
6-AB4-	20	8/29/68	6-AB5-	32.1	12/14/67	6-AB5-	71	10/31/67			
6-AB4-	21	8/29/68	6-AB5-	33	12/14/67	6-AB5-	72	10/ 4/67	6-AB6-	1	5/ 1/69
6-AB4-	22	12/20/67	6-AB5-	34	10/31/67	6-AB5-	73	10/ 4/67	6-A6 -	2	6/12/67
6-AB4-	23	12/20/67	6-AB5-	35	9/29/67	6-AB5-	74	9/29/67	6-A6 -	3	6/12/67
6-AB4-	24	12/20/67	6-AB5-	36	9/29/67	6-AB5-	75	9/29/67	6-A6 -	4	6/12/67
			6-AB5-	37	9/15/67	6-AB5-	76	10/31/67	6-B6 -	5	2/12/68
			6-AB5-	38	12/14/67	6-AB5-	77	10/31/67	6-B6 -	6	2/12/68
6-AB5-	1	5/ 1/69	6-AB5-	39	12/14/67	6-AB5-	77.1	10/31/67	6-B6 -	7	2/12/68
6-AB5-	2	9/29/67	6-AB5-	40	12/14/67	6-AB5-	78	10/31/67	6-B6 -	8	3/11/68
6-AB5-	3	3/13/68	6-AB5-	40.1	9/15/67	6-AB5-	79	10/31/67			
6-AB5-	3.1	3/13/68	6-AB5-	41	9/15/67	6-AB5-	79.1	10/31/67			
6-AB5-	4	3/13/68	6-AB5-	42	9/15/67	6-AB5-	79.2	10/31/67	6-AB7-	1	5/ 1/69
6-AB5-	5	3/13/68	6-AB5-	43	9/29/67	6-AB5-	80	10/31/67	6-AB7-	2	8/ 5/67
6-AB5-	6	8/14/67	6-AB5-	44	10/31/67	6-AB5-	81	9/29/67	6-AB7-	2.1	8/ 5/67
6-AB5-	6.1	3/13/68	6-AB5-	45	9/29/67	6-AB5-	82	10/31/67	6-AB7-	2.2	9/15/67
6-AB5-	7	8/14/67	6-AB5-	46	9/15/67	6-AB5-	83	10/31/67	6-AB7-	2.3	9/15/67
6-AB5-	7.1	3/13/68	6-AB5-	47	9/29/67	6-AB5-	83.1	10/31/67	6-AB7-	2.4	9/27/68
6-AB5-	7.2	3/13/68	6-AB5-	48	9/15/67	6-AB5-	83.2	10/31/67	6-AB7-	2.5	11/24/67
6-AB5-	7.3	3/13/68	6-AB5-	49	9/15/67	6-AB5-	84	10/31/67	6-AB7-	2.6	1/24/68
6-AB5-	8	8/14/67	6-AB5-	49.1	9/15/67	6-AB5-	85	12/21/67	6-AB7-	2.7	1/24/68
6-AB5-	9	8/14/67	6-AB5-	50	9/15/67	6-AB5-	86	10/31/67	6-AB7-	2.8	2/21/68
6-AB5-	10	3/13/68	6-AB5-	50.1	9/15/67	6-AB5-	86.1	10/31/67	6-AB7-	2.9	2/21/68
6-AB5-	10.2	8/14/67	6-AB5-	50.2	9/15/67	6-AB5-	87	9/29/67	6-AB7-	2.10	7/17/68
6-AB5-	10.3	8/14/67	6-AB5-	51	10/31/67	6-AB5-	88	9/29/67	6-AB7-	2.11	9/27/68
6-AB5-	10.4	8/14/67	6-AB5-	51.1	9/29/67	6-AB5-	89	9/29/67	6-AB7-	3	2/ 9/68
6-AB5-	10.5	8/14/67	6-AB5-	52	9/15/67	6-AB5-	90	9/29/67	6-AB7-	4	2/ 9/68
6-AB5-	10.6	2/ 9/68	6-AB5-	53	9/15/67	6-AB5-	91	9/29/67	6-AB7-	5	5/ 7/68
6-AB5-	10.7	2/ 9/68	6-AB5-	53.1	9/15/67	6-AB5-	92	9/29/67	6-AB7	5.1	2/ 9/68
6-AB5-	10.8	2/ 9/68	6-AB5-	54	10/31/67	6-AB5-	93	9/29/67	6-AB7	5.2	2/ 9/68
6-AB5-	10.9	3/13/68	6-AB5-	55	9/29/67	6-AB5-	94	9/29/67	6-AB7-	6	5/ 7/68
6-AB5-	10.10	3/13/68	6-AB5-	55.1	10/31/67	6-AB5-	95	8/14/67	6-AB7-	7	12/21/67
6-AB5-	11	8/14/67	6-AB5-	55.2	9/29/67	6-AB5-	96	1/24/68	6-AB7-	8	12/21/67
6-AB5-	11.1	3/13/68	6-AB5-	56	9/15/67	6-AB5-	97	1/24/68	6-AB7-	9	12/21/67
6-AB5-	11.2	3/13/68	6-AB5-	57	10/31/67	6-AB5-	97.1	1/24/68			
6-AB5-	11.3	3/13/68	6-AB5-	57.1	10/31/67	6-AB5-	98	2/21/68			
6-AB5-	11.4	3/13/68	6-AB5-	58	10/31/67	6-AB5-	99	2/21/68			
6-AB5-	12	8/14/67	6-AB5-	59	9/15/67	6-AB5-100		2/21/68			
6-AB5-	13	9/29/67	6-AB5-	59.1	9/15/67	6-AB5-101		2/21/68			
6-AB5-	13.1	8/14/67	6-AB5-	60	10/31/67	6-AB5-102		11/17/67			
6-AB5-	14	8/14/67	6-AB5-	61	9/29/67	6- B5-103		3/11/68			
6-AB5-	14.1	8/14/67	6-AB5-	62	9/29/67	6- B5-103.1		3/11/68			
6-AB5-	15	8/14/67	6-AB5-	63	10/31/67	6- B5-104		3/11/68			
6-AB5-	16	9/29/67	6-AB5-	64	9/29/67	6- B5-105		3/11/68			
6-AB5-	28	12/14/67	6-AB5-	65	9/15/67	6- B5-105.1		3/11/68			
6-AB5-	29	12/14/67	6-AB5-	65.1	9/15/67	6- B5-106		2/ 9/68			
6-AB5-	30	12/14/67	6-AB5-	66	9/29/67	6- B5-109		2/ 9/68			

LICENSED PROFESSIONAL ENGINEER — LESLIE E. ROBERTSON — No 34960 — THE STATE OF NEW YORK

6-AB0-0.4

SKILLING, HELLE, CHRISTIANSEN, ROBERTSON — Structural & Civil Engineers

PROJECT	TITLE	DATE
THE WORLD TRADE CENTER	DRAWING BOOK 6- BEAM CONNECTIONS & MISC. DETAILS	10/ 6/72

REVISIONS

PRINTED 5/18/73

6-AB8- 1	5/ 1/69	6-AB8-46	11/22/67
6-AB8- 1.1	5/ 1/69	6-AB8-47	11/22/67
6-AB8- 2	9/18/68	6-AB8-48	11/22/67
6-AB8- 2.1	9/18/68	6-AB8-49	11/22/67
6-AB8- 3	9/18/68	6-AB8-50	11/22/67
6-AB8- 4	11/22/67	6-AB8-50.1	11/22/67
6-AB8- 5	9/18/68	6-AB8-51	11/22/67
6-AB8- 5.1	9/18/68	6-AB8- 52	9/18/68
6-AB8- 6	9/18/68		
6-AB8- 7	11/22/67		
6-AB8- 8	11/22/67	6-AB9- 1	5/ 1/69
6-AB8- 9	11/22/67	6-AB9- 2	1/12/68
6-AB8-10	11/22/67	6-AB9- 3	1/12/68
6-AB8-11	11/22/67	6-AB9- 4	1/12/68
6-AB8-12	11/22/67	6-AB9- 5	1/12/68
6-AB8-13	11/22/67	6-AB9- 6	1/12/68
6-AB8-14	11/22/67	6-AB9- 7	1/12/68
6-AB8-15	3/ 5/68	6-AB9- 8	3/29/68
6-AB8-15.1	11/22/67	6-AB9- 9	3/29/68
6-AB8-16	3/ 5/68		
6-AB8-16.1	11/22/67		
6-AB8-17	11/22/67		
6-AB8-18	11/22/67		
6-AB8-19	11/22/67		
6-AB8-20	11/22/67		
6-AB8-21	11/22/67		
6-AB8-22	11/22/67		
6-AB8-23	11/22/67		
6-AB8-24	11/22/67		
6-AB8-25	11/22/67		
6-AB8-26	11/22/67		
6-AB8-27	11/22/67		
6-AB8-28	11/22/67		
6-AB8-29	11/22/67		
6-AB8-30	11/22/67		
6-AB8-31	11/22/67		
6-AB8-32	11/22/67		
6-AB8-33	11/22/67		
6-AB8-34	11/22/67		
6-AB8-35	11/22/67		
6-AB8-36	11/22/67		
6-AB8-37	11/22/67		
6-AB8-38	11/22/67		
6-AB8-39	11/22/67		
6-AB8-40	11/22/67		
6-AB8-41	11/22/67		
6-AB8-42	11/22/67		
6-AB8-43	11/22/67		
6-AB8-44	11/22/67		
6-AB8-45	11/22/67		

LICENSED PROFESSIONAL ENGINEER — LESLIE E. ROBERTSON — No. 34360 — OF THE STATE OF NEW YORK

6-AB0-0.5

SKILLING, HELLE, CHRISTIANSEN, ROBERTSON — *Structural & Civil Engineers*

PROJECT	TITLE	DATE
THE WORLD TRADE CENTER	CONNECTION DETAILS - INDEX	4/ 1/69

REVISIONS

Printed 5-1-69

6-AB1-	0	INDEX	6-AB1-	20.2	DETAIL 213	6-AB1-	44	DETAIL 237
6-AB1-	1	GENERAL NOTES	6-AB1-	21	DETAIL 214	6-AB1-	44.1	DETAIL 237
6-AB1-	2	DETAIL 201	6-AB1-	21.1	DETAIL 214	6-AB1-	44.2	DETAIL 237
6-AB1-	2.1	DETAIL 201	6-AB1-	22	DETAIL 215	6-AB1-	44.3	DETAIL 237
6-AB1-	2.2	DETAIL 201	6-AB1-	23	DETAIL 216	6-AB1-	44.4	DETAIL 237
6-AB1-	2.3	DETAIL 201	6-AB1-	23.1	DETAIL 216	6-AB1-	44.5	DETAIL 237
6-AB1-	2.4	DETAIL 201	6-AB1-	24	DETAIL 217	6-AB1-	44.6	DETAIL 237
6-AB1-	2.5	DETAIL 201	6-AB1-	24.1	DETAIL 217	6-AB1-	44.7	DETAIL 237
6-AB1-	2.6	DETAIL 201	6-AB1-	25	DETAIL 218	6-AB1-	44.8	DETAIL 237
6-AB1-	5	DETAIL 202	6-AB1-	25.1	DETAIL 218	6-AB1-	45	DETAIL 238
6-AB1-	5.1	DETAIL 202	6-AB1-	25.2	DETAIL 218	6-AB1-	45.1	DETAIL 238
6-AB1-	5.2	DETAIL 202	6-AB1-	26	DETAIL 219	6-AB1-	46	DETAIL 240
6-AB1-	5.3	DETAIL 202	6-AB1-	26.1	DETAIL 219	6-AB1-	47	DETAIL 241
6-AB1-	5.4	DETAIL 202	6-AB1-	27	DETAIL 220	6-AB1-	48	DETAIL 242
6-AB1-	6	DETAIL 203	6-AB1-	27.1	DETAIL 220	6-AB1-	49	DETAIL 243
6-AB1-	6.1	DETAIL 203	6-AB1	27.2	DETAIL 220	6-AB1-	49.1	DETAIL 243
6-AB1-	6.2	DETAIL 203	6-AB1	27.3	DETAIL 220	6-AB1-	50	DETAIL 244
6-AB1-	7	DETAIL 204	6-AB1	27.4	DETAIL 220	6-AB1-	50.1	DETAIL 244
6-AB1-	7.1	DETAIL 204	6-AB1	27.5	DETAIL 220	6-AB1-	51	DETAIL 245
6-AB1-	9	DETAIL 205	6-AB1-	27.6	DETAIL 220	6-AB1-	51.1	DETAIL 245
6-AB1-	9.1	DETAIL 205	6-AB1-	27.7	DETAIL 220	6-AB1-	51.2	DETAIL 245
6-AB1-	9.2	DETAIL 205	6-AB1-	27.8	DETAIL 220	6-AB1-	51.3	DETAIL 245
6-AB1-	9.3	DETAIL 205	6-AB1-	28	DETAIL 221	6-AB1-	52	DETAIL 246
6-AB1-	9.4	DETAIL 205	6-AB1-	28.1	DETAIL 221	6-AB1-	52.1	DETAIL 246
6-AB1-	9.5	DETAIL 205	6-AB1-	29	DETAIL 222	6-AB1-	52.2	DETAIL 246
6-AB1-	9.6	DETAIL 205	6-AB1-	29.1	DETAIL 222	6-AB1-	53	DETAIL 247
6-AB1-	9.7	DETAIL 205	6-AB1-	30	DETAIL 223	6-AB1-	53*	ALTERNATE
6-AB1-	9.8	DETAIL 205	6-AB1-	31	DETAIL 224	6-AB1-	53.1	DETAIL 247
6-AB1-	9.9	DETAIL 205	6-AB1-	32	DETAIL 225	6-AB1-	53.1*	ALTERNATE
6-AB1-	9.10	DETAIL 205	6-AB1-	33	DETAIL 226	6-AB1-	53.2	DETAIL 247
6-AB1-	11	DETAIL 206	6-AB1-	33.1	DETAIL 226	6-AB1-	53.3	DETAIL 247
6-AB1-	11.1	DETAIL 206	6-AB1-	34	DETAIL 227	6-AB1-	53.4	DETAIL 247
6-AB1-	12	DETAIL 207	6-AB1-	35	DETAIL 228	6-AB1-	54	DETAIL 248
6-AB1-	13	DETAIL 208	6-AB1-	36	DETAIL 229	6-AB1-	55	DETAIL 249
6-AB1-	13.1	DETAIL 208	6-AB1-	36.1	DETAIL 229	6-AB1-	55.1	DETAIL 249
6-AB1-	13.2	DETAIL 208	6-AB1-	36.2	DETAIL 229	6-AB1-	56	DETAIL 251
6-AB1-	13.3	DETAIL 208	6-AB1-	37	DETAIL 230	6-AB1-	56.1	DETAIL 251
6-AB1-	13.4	DETAIL 208	6-AB1-	38	DETAIL 231	6-AB1-	56.2	DETAIL 251
6-AB1-	13.5	DETAIL 208	6-AB1-	39	DETAIL 232	6-AB1-	56.3	DETAIL 251
6-AB1-	15	DETAIL 209	6-AB1-	39.1	DETAIL 232	6-AB1-	56.4	DETAIL 251
6-AB1-	15.1	DETAIL 209	6-AB1-	40	DETAIL 233	6-AB1-	56.5	DETAIL 251
6-AB1-	15.2	DETAIL 209	6-AB1-	40.1	DETAIL 233	6-AB1-	57	DETAIL 252
6-AB1-	15.3	DETAIL 209	6-AB1-	41	DETAIL 234	6-AB1-	58	DETAIL 253
6-AB1-	16	DETAIL 210	6-AB1-	41.1	DETAIL 234			
6-AB1-	17	DETAIL 211	6-AB1-	41.2	DETAIL 234			
6-AB1-	17.1	DETAIL 211	6-AB1-	41.3	DETAIL 234			
6-AB1-	17.2	DETAIL 211	6-AB1-	41.4	DETAIL 234			
6-AB1-	18	DETAIL 212	6-AB1-	42	DETAIL 235			
6-AB1-	20	DETAIL 213	6-AB1-	42.1	DETAIL 235			
6-AB1-	20.1	DETAIL 213	6-AB1-	43	DETAIL 236			

79

REVISIONS

Printed 5-1-69

6-AB1- 59	DETAIL	254	6-AB1- 83.1*	ALTERNATE 1		6-AB1-102.1	DETAIL	295
6-AB1- 59.1	DETAIL	254	6-AB1- 83.2	DETAIL	276	6-AB1-103	DETAIL	296
6-AB1- 59.2	DETAIL	254	6-AB1- 84	DETAIL	277	6-AB1-103.1	DETAIL	296
6-AB1- 59.3	DETAIL	254	6-AB1- 85	DETAIL	278	6-AB1-103.2	DETAIL	296
6-AB1- 60	DETAIL	255	6-AB1- 85*	ALTERNATE		6-AB1-104	DETAIL	297
6-AB1- 60.1	DETAIL	255	6-AB1- 85.1	DETAIL	278	6-AB1-105	DETAIL	298
6-AB1- 61	DETAIL	256	6-AB1- 86	DETAIL	279	6-AB1-106	DETAIL	299
6-AB1- 62	DETAIL	257	6-AB1- 86.1	DETAIL	279	6-AB1-107	DETAIL	300
6-AB1- 62.1	DETAIL	257	6-AB1- 87	DETAIL	280	6-AB1-108	DETAIL	301
6-AB1- 63	DETAIL	258	6-AB1- 88	DETAIL	281	6-AB1-108.1	DETAIL	301
6-AB1- 64	DETAIL	259	6-AB1- 89	DETAIL	282	6-AB1-108.2	DETAIL	301
6-AB1- 65	DETAIL	260	6-AB1- 89.1	DETAIL	282	6-AB1-109	DETAIL	302
6-AB1- 65.1	DETAIL	260	6-AB1- 90	DETAIL	283	6-AB1-110	DETAIL	303
6-AB1- 65.3	DETAIL	260	6-AB1- 90.1	DETAIL	283	6-AB1-110*	ALTERNATE	
6-AB1- 65.4	DETAIL	260	6-AB1- 90.2	DETAIL	283	6-AB1-110.1	DETAIL	303
6-AB1- 66	DETAIL	261	6-AB1- 90.3	DETAIL	283	6-AB1-110.2	DETAIL	303
6-AB1- 67	DETAIL	262	6-AB1- 90.4	DETAIL	283	6-AB1-111	DETAIL	304
6-AB1- 68	DETAIL	263	6-AB1- 90.5	DETAIL	283	6-AB1-111.1	DETAIL	304
6-AB1- 69	DETAIL	264	6-AB1- 90.6	DETAIL	283	6-AB1-112	DETAIL	305
6-AB1- 70	DETAIL	265	6-AB1- 90.7	DETAIL	287	6-AB1-113	DETAIL	306
6-AB1- 70.1	DETAIL	265	6-AB1- 90.8	DETAIL	283	6-AB1-113.1	DETAIL	306
6-AB1- 70.2	DETAIL	265	6-AB1- 90.9	DETAIL	283	6-AB1-113.2	DETAIL	306
6-AB1- 71	DETAIL	266	6-AB1- 90.10	DETAIL	283	6-AB1-114	DETAIL	307
6-AB1- 72	DETAIL	267	6-AB1- 90.11	DETAIL	283	6-AB1-114.1	DETAIL	307
6-AB1- 72.1	DETAIL	267	6-AB1- 91	DETAIL	284	6-AB1-114.2	DETAIL	307
6-AB1- 73	DETAIL	268	6-AB1- 91.1	DETAIL	285	6-AB1-114.3	DETAIL	307
6-AB1- 74	DETAIL	269	6-AB1- 92	DETAIL	285	6-AB1-114.4	DETAIL	307
6-AB1- 75	DETAIL	270	6-AB1- 92.1	DETAIL	286	6-AB1-115	DETAIL	308
6-AB1- 75.1	DETAIL	270	6-AB1- 93	DETAIL	286	6-AB1-115.1	DETAIL	308
6-AB1- 76	DETAIL	271	6-AB1- 93.1	DETAIL	286	6-AB1-116	DETAIL	309
6-AB1- 76.1	DETAIL	271	6-AB1- 93.2	DETAIL	286	6-AB1-116.1	DETAIL	309
6-AB1- 77	DETAIL	272	6-AB1- 94	DETAIL	287	6-AB1-117	DETAIL	310
6-AB1- 77.1	DETAIL	272	6-AB1- 94.1	DETAIL	287	6-AB1-117.1	DETAIL	310
6-AB1- 77.2	DETAIL	272	6-AB1- 94.2	DETAIL	287	6-AB1-117.2	DETAIL	310
6-AB1- 77.3	DETAIL	272	6-AB1- 94.3	DETAIL	287	6-AB1-117.2*	ALTERNATE	
6-AB1- 77.4	DETAIL	272	6-AB1- 95	DETAIL	288	6-AB1-117.3	DETAIL	310
6-AB1- 78	DETAIL	273	6-AB1- 96	DETAIL	289	6-AB1-117.4	DETAIL	310
6-AB1- 78.1	DETAIL	273	6-AB1- 97	DETAIL	290			
6-AB1- 81	DETAIL	274	6-AB1- 98	DETAIL	291			
6-AB1- 81*	ALTERNATE		6-AB1- 99	DETAIL	292			
6-AB1- 81*	ALTERNATE		6-AB1- 99.1	DETAIL	292			
6-AB1- 81*	ALTERNATE	5	6-AB1- 99.2	DETAIL	292			
6-AB1- 81.1	DETAIL	274	6-AB1- 99.3	DETAIL	292			
6-AB1- 81.1*	ALTERNATE		6-AB1-100	DETAIL	293			
6-AB1- 81.1*	ALTERNATE	5	6-AB1-101	DETAIL	294			
6-AB1- 81.2	DETAIL	274	6-AB1-101.1	DETAIL	294			
6-AB1- 82	DETAIL	275	6-AB1-101.2	DETAIL	294			
6-AB1- 83	DETAIL	276	6-AB1-101.3	DETAIL	294			
6-AB1- 83*	ALTERNATE	1	6-AB1-101.4	DETAIL	294			
6-AB1- 83.1	DETAIL	276	6-AB1-102	DETAIL	295			

SKILLING, HELLE, CHRISTIANSEN, ROBERTSON — Structural & Civil Engineers

PROJECT	TITLE	DATE
THE WORLD TRADE CENTER	CONNECTION DETAILS - INDEX	4/ 1/69

REVISIONS

Printed 5-1-69

6-AB1-118	DETAIL	311	6-AB1-142.8	DETAIL	335	6-AB1-166	DETAIL	359
6-AB1-118.1	DETAIL	311	6-AB1-142.9	DETAIL	335	6-AB1-166.1	DETAIL	359
6-AB1-119	DETAIL	312	6-AB1-142.10	DETAIL	335	6-AB1-167	DETAIL	360
6-AB1-119.1	DETAIL	312	6-AB1-143	DETAIL	336	6-AB1-167.1	DETAIL	360
6-AB1-120	DETAIL	313	6-AB1-144	DETAIL	337	6-AB1-168	DETAIL	361
6-AB1-120.1	DETAIL	313	6-AB1-144.1	DETAIL	337	6-AB1-169	DETAIL	362
6-AB1-120.2	DETAIL	313	6-AB1-144.2	DETAIL	337	6-AB1-169.1	DETAIL	362
6-AB1-120.3	DETAIL	313	6-AB1-145	DETAIL	338	6-AB1-170	DETAIL	363
6-AB1-121	DETAIL	314	6-AB1-145.1	DETAIL	338	6-AB1-171	DETAIL	364
6-AB1-121.1	DETAIL	314	6-AB1-145.2	DETAIL	338	6-AB1-171.1	DETAIL	364
6-AB1-122	DETAIL	315	6-AB1-145.4	DETAIL	338	6-AB1-171.2	DETAIL	364
6-AB1-122.1	DETAIL	315	6-AB1-146	DETAIL	339	6-AB1-171.3	DETAIL	364
6-AB1-123	DETAIL	316	6-AB1-147	DETAIL	340	6-AB1-171.4	DETAIL	364
6-AB1-123.1	DETAIL	316	6-AB1-148	DETAIL	341	6-AB1-171.5	DETAIL	364
6-AB1-124	DETAIL	317	6-AB1-149	DETAIL	342	6-AB1-171.6	DETAIL	364
6-AB1-124.1	DETAIL	317	6-AB1-150	DETAIL	343	6-AB1-171.7	DETAIL	364
6-AB1-125	DETAIL	318	6-AB1-151	DETAIL	344	6-AB1-172	DETAIL	365
6-AB1-127	DETAIL	320	6-AB1-151.1	DETAIL	344	6-AB1-173	DETAIL	366
6-AB1-127.1	DETAIL	320	6-AB1-152	DETAIL	345	6-AB1-173.1	DETAIL	366
6-AB1-128	DETAIL	321	6-AB1-152.1	DETAIL	345	6-AB1-174	DETAIL	367
6-AB1-128.1	DETAIL	321	6-AB1-153	DETAIL	346	6-AB1-174.1	DETAIL	367
6-AB1-129	DETAIL	322	6-AB1-154	DETAIL	347	6-AB1-175	DETAIL	368
6-AB1-129.1	DETAIL	322	6-AB1-154.1	DETAIL	347	6-AB1-175.1	DETAIL	368
6-AB1-129.2	DETAIL	322	6-AB1-154.2	DETAIL	347	6-AB1-176	DETAIL	369
6-AB1-130	DETAIL	323	6-AB1-155	DETAIL	348	6-AB1-177	DETAIL	370
6-AB1-131	DETAIL	324	6-AB1-155.1	DETAIL	348	6-AB1-177.1	DETAIL	370
6-AB1-131.1	DETAIL	324	6-AB1-155.2	DETAIL	348	6-AB1-177.2	DETAIL	370
6-AB1-131.2	DETAIL	324	6-AB1-156	DETAIL	349	6-AB1-177.3	DETAIL	370
6-AB1-132	DETAIL	325	6-AB1-156.1	DETAIL	349	6-AB1-177.4	DETAIL	370
6-AB1-133	DETAIL	326	6-AB1-156.2	DETAIL	349	6-AB1-178	DETAIL	371
6-AB1-134	DETAIL	327	6-AB1-156.3	DETAIL	349	6-AB1-178.1	DETAIL	371
6-AB1-135	DETAIL	328	6-AB1-157	DETAIL	350	6-AB1-179	DETAIL	372
6-AB1-136	DETAIL	329	6-AB1-157.1	DETAIL	350	6-AB1-179.1	DETAIL	372
6-AB1-136.1	DETAIL	329	6-AB1-157.2	DETAIL	350	6-AB1-180	DETAIL	373
6-AB1-137	DETAIL	330	6-AB1-157.3	DETAIL	350	6-AB1-180.1	DETAIL	373
6-AB1-137.1	DETAIL	330	6-AB1-157.4	DETAIL	350	6-AB1-181	DETAIL	374
6-AB1-138	DETAIL	331	6-AB1-158	DETAIL	351	6-AB1-181.1	DETAIL	374
6-AB1-139	DETAIL	332	6-AB1-159	DETAIL	352	6-AB1-182	DETAIL	375
6-AB1-140	DETAIL	333	6-AB1-159.1	DETAIL	352	6-AB1-183	DETAIL	376
6-AB1-141	DETAIL	334	6-AB1-160	DETAIL	353	6-AB1-184	DETAIL	377
6-AB1-141.1	DETAIL	334	6-AB1-160.1	DETAIL	353	6-AB1-184.1	DETAIL	377
6-AB1-141.2	DETAIL	334	6-AB1-161	DETAIL	354	6-AB1-185	DETAIL	378
6-AB1-142	DETAIL	335	6-AB1-161.1	DETAIL	354	6-AB1-186	DETAIL	379
6-AB1-142.1	DETAIL	335	6-AB1-161.2	DETAIL	354			
6-AB1-142.2	DETAIL	335	6-AB1-162	DETAIL	355			
6-AB1-142.3	DETAIL	335	6-AB1-162.1	DETAIL	355			
6-AB1-142.4	DETAIL	335	6-AB1-164	DETAIL	357			
6-AB1-142.5	DETAIL	335	6-AB1-164.1	DETAIL	357			
6-AB1-142.6	DETAIL	335	6-AB1-164.2	DETAIL	357			
6-AB1-142.7	DETAIL	335	6-AB1-165	DETAIL	358			

LICENSED PROFESSIONAL ENGINEER — LESLIE E. ROBERTSON — No. 34360 — UNIVERSITY OF THE STATE OF NEW YORK

SKILLING, HELLE, CHRISTIANSEN, ROBERTSON — Structural & Civil Engineers

PROJECT: THE WORLD TRADE CENTER | TITLE: CONNECTION DETAILS - INDEX | DATE: 4/ 1/69

REVISIONS

Printed 5-1-69

6-AB1-187	DETAIL	380	6-AB1-212	DETAIL	706	6-AB1-255	DETAIL	758
6-AB1-188	DETAIL	381	6-AB1-213	DETAIL	707	6-AB1-256	DETAIL	759
6-AB1-188.1	DETAIL	381	6-AB1-213*	ALTERNATE		6-AB1-257	DETAIL	761
6-AB1-188.2	DETAIL	381	6-AB1-214	DETAIL	708	6-AB1-258	DETAIL	766
6-AB1-189	DETAIL	382	6-AB1-215	DETAIL	709	6-AB1-259	DETAIL	767
6-AB1-189.1	DETAIL	382	6-AB1-215.1	DETAIL	709	6-AB1-259.1	DETAIL	767
6-AB1-189.2	DETAIL	382	6-AB1-216	DETAIL	710	6-AB1-260	DETAIL	771
6-AB1-189.3	DETAIL	382	6-AB1-216.1	DETAIL	710	6-AB1-261	DETAIL	772
6-AB1-189.4	DETAIL	382	6-AB1-217	DETAIL	711	6-AB1-262	DETAIL	773
6-AB1-189.5	DETAIL	382	6-AB1-217.1	DETAIL	711	6-AB1-263	DETAIL	774
6-AB1-189.6	DETAIL	382	6-AB1-218	DETAIL	712	6-AB1-264	DETAIL	775
6-AB1-190	DETAIL	383	6-AB1-219	DETAIL	713	6-AB1-266	DETAIL	777
6-AB1-191	DETAIL	384	6-AB1-220	DETAIL	714	6-AB1-267	DETAIL	778
6-AB1-192	DETAIL	385	6-AB1-220.1	DETAIL	714	6-AB1-268	DETAIL	779
6-AB1-193	DETAIL	386	6-AB1-221	DETAIL	715	6-AB1-269	DETAIL	780
6-AB1-194	DETAIL	387	6-AB1-222	DETAIL	716	6-AB1-270	DETAIL	781
6-AB1-195	DETAIL	388	6-AB1-223	DETAIL	717	6-AB1-271	DETAIL	782
6-AB1-196	DETAIL	389	6-AB1-224	DETAIL	718	6-AB1-272	DETAIL	783
6-AB1-197	DETAIL	390	6-AB1-225	DETAIL	719	6-AB1-301	DETAIL	788
6-AB1-198	DETAIL	391	6-AB1-226	DETAIL	720	6-AB1-302	DETAIL	789
6-AB1-198.1	DETAIL	391	6-AB1-227	DETAIL	721	6-AB1-303	DETAIL	792
6-AB1-198.2	DETAIL	391	6-AB1-228	DETAIL	722	6-AB1-304	DETAIL	795
6-AB1-198.3	DETAIL	391	6-AB1-229	DETAIL	723	6-AB1-305	DETAIL	798
6-AB1-198.4	DETAIL	391	6-AB1-230	DETAIL	724	6-AB1-306	DETAIL	800
6-AB1-199	DETAIL	392	6-AB1-231	DETAIL	725	6-AB1-306.1	DETAIL	800
6-AB1-200	DETAIL	393	6-AB1-232	DETAIL	726	6-AB1-307	DETAIL	801
6-AB1-200.1	DETAIL	393	6-AB1-233	DETAIL	727	6-AB1-307.1	DETAIL	801
6-AB1-200.2	DETAIL	393	6-AB1-234	SECTIONS		6-AB1-308	DETAIL	802
6-AB1-202	DETAIL	395	6-AB1-235	DETAIL	728	6-AB1-308.1	DETAIL	802
6-AB1-202.1	DETAIL	395	6-AB1-235.1	DETAIL	728	6-AB1-309	DETAIL	803
6-AB1-202.2	DETAIL	395	6-AB1-236	DETAIL	729	6-AB1-309.1	DETAIL	803
6-AB1-202.3	DETAIL	395	6-AB1-237	DETAIL	730	6-AB1-309.2	DETAIL	803
6-AB1-203	DETAIL	396	6-AB1-238	DETAIL	731	6-AB1-309.3	DETAIL	803
6-AB1-204	DETAIL	397	6-AB1-239	DETAIL	732	6-AB1-310	DETAIL	804
6-AB1-205	DETAIL	398	6-AB1-240	DETAIL	733	6-AB1-310.1	DETAIL	804
6-AB1-205.1	DETAIL	398	6-AB1-241	DETAIL	734	6-AB1-310.2	DETAIL	804
6-AB1-205.2	DETAIL	398	6-AB1-242	DETAIL	735	6-AB1-310.3	DETAIL	804
6-AB1-206	DETAIL	399	6-AB1-243	DETAIL	736	6-AB1-311	DETAIL	805
6-AB1-206.1	DETAIL	399	6-AB1-244	DETAIL	737	6-AB1-311.1	DETAIL	805
6-AB1-206.2	DETAIL	400	6-AB1-245	DETAIL	738	6-AB1-312	DETAIL	806
6-AB1-207	DETAIL	701	6-AB1-246	DETAIL	739	6-AB1-312.1	DETAIL	806
6-AB1-208	DETAIL	702	6-AB1-247	DETAIL	740	6-AB1-313	DETAIL	807
6-AB1-208.1	DETAIL	702	6-AB1-248	DETAIL	750	6-AB1-314	DETAIL	808
6-AB1-209	DETAIL	703	6-AB1-249	DETAIL	751	6-AB1-315	DETAIL	809
6-AB1-209.1	DETAIL	703	6-AB1-249.1	DETAIL	751	6-AB1-500*	ALTERNATE	
6-AB1-209.2	DETAIL	703	6-AB1-250	DETAIL	752			
6-AB1-210	DETAIL	704	6-AB1-251	DETAIL	753			
6-AB1-211	DETAIL	705	6-AB1-252	DETAIL	754			
6-AB1-211*	ALTERNATE		6-AB1-253	DETAIL	755			
6-AB1-211.1	DETAIL	705	6-AB1-254	DETAIL	756			

LICENSED PROFESSIONAL ENGINEER — LESLIE E. ROBERTSON JR — No. 34360 — UNIVERSITY OF THE STATE OF NEW YORK

SKILLING - HELLE - CHRISTIANSEN - ROBERTSON — Structural & Civil Engineers

PROJECT THE WORLD TRADE CENTER | TITLE DRAWING BOOK 6 | DATE

ISIONS

6-AB1-

Connection Details 200-399 & 700-799
(See 6-AB1-0 for index)

6-AB2-

Connection Details 100-199 & 400-599
(See 6-AB2-0 for index)

6-AB3-

Horizontal Bracing & Bridging Details
Beam Framed Floors
(See 6-AB3-0 for index)

6-AB4-

Louver Wall Struts
(See 6-AB4-0 for index)

6-AB5-

Vertical Bracing
(See 6-AB5-0 for index)

6-A6- & 6-B6-

Interior Columns to Floor 1
(See 6-AB6-1 for index)

6-AB7-

Anchors to Slabs
(See 6-AB7-0 for index)

6-AB8-

Perimeter Core Truss Seats & Shear Studs
(See 6-AB8-1 for index)

6-AB9-

Temporary Framing for Elevator 6 & 7
(See 6-AB9-0 for index)

Note: See 6-AB0- for latest date for each page

LICENSED PROFESSIONAL ENGINEER
LESLIE E. ROBERTSON
No. 34360
STATE OF NEW YORK

WORTHINGTON, SKILLING, HELLE & JACKSON — CIVIL & STRUCTURAL ENGINEERS

PROJECT THE WORLD TRADE CENTER | TITLE CONNECTION DETAILS - GENERAL NOTES | DATE 7-5-67

REVISIONS
7-28-67

1. DIMENSIONS

a. All beam reference centerlines and column reference face or center lines are located in the plans.

b. Elevation of top of steel is shown in the plans. See Beam Types (5AB2-) for location on beam of reference top of steel.

c. Where a dimension is shown in the drawings from the centerline of a beam or column it shall be considered to be from the reference centerline of the beam or column. Where a dimension is shown from the face of a column, it shall be considered to be from the theoretical face of the column. The theoretical face of the column is located from the reference centerline of the column by a distance equal to one half of the scheduled column width or depth.

2. CONNECTION PLATES

a. Where connection plate dimensions are not shown in the drawings, plate dimensions shall be determined by providing standard AISC edge distances with the indicated bolt spacing.

b. Use standard gauge for all bolts in beams unless otherwise shown in the drawings, or approved by the Engineer.

c. The bolt patterns is the same for the top and bottom ℄'s of a connection unless otherwise shown in the drawings.

3. BOLTED CONNECTIONS

a. All bolted connections shall be friction type connections except where specifically noted in the drawings.

b. All bolts shall be ASTM A325 bolts, except in locations where ASTM A490 or A307 bolts are specifically called for in the drawings.

c. Bolted connections shall have a minimum of 2-¾" bolts except where specifically noted in the drawings.

4. STIFFENED SEATS

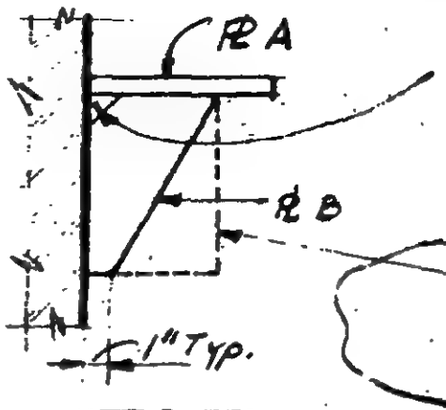

Where ℄ A is welded to the column with complete penetration weld, snipe corner of ℄ B to clear weld.

Where ℄ B is shown in the drawings with a square cut, sloped cut as shown may be supplied.

5. MATERIALS

a. All connection plates, angles and other detail material shall conform to ASTM A36 unless another type of steel is specifically noted in the drawings.

b. All manual welding electrodes shall be E70 xx low hydrogen electrodes unless otherwise shown in the drawings.

6. TOP CLIP ANGLES

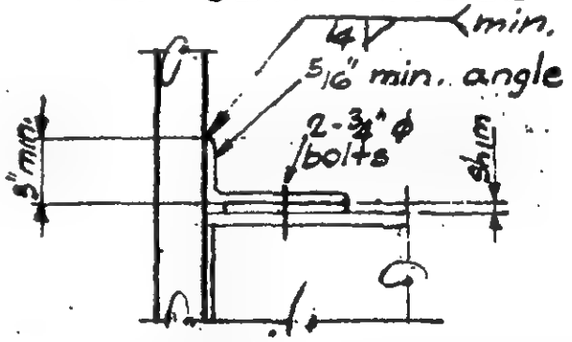

This detail shall be used where top clip angles are indicated in the drawings but not sized.

LICENSED PROFESSIONAL ENGINEER — LESLIE E. ROBERTSON — No. 34360 — STATE OF NEW YORK

G-AB1-1

WORTHINGTON, SKILLING, HELLE & JACKSON — Civil & Structural Engineers

PROJECT: THE WORLD TRADE CENTER | TITLE: CONNECTION DETAIL 201 A,B,C,D | DATE: 5-1-67

REVISIONS

6-19-67
7-28-67
12-21-67

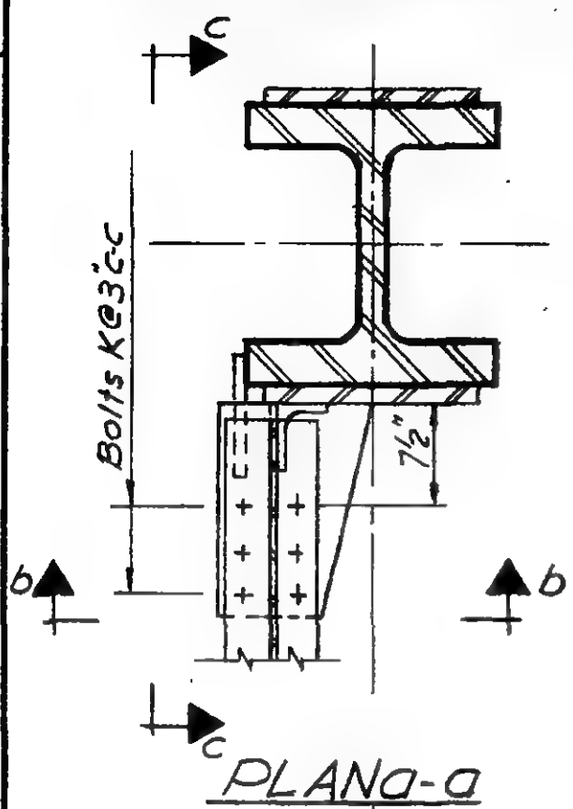

PLAN a-a

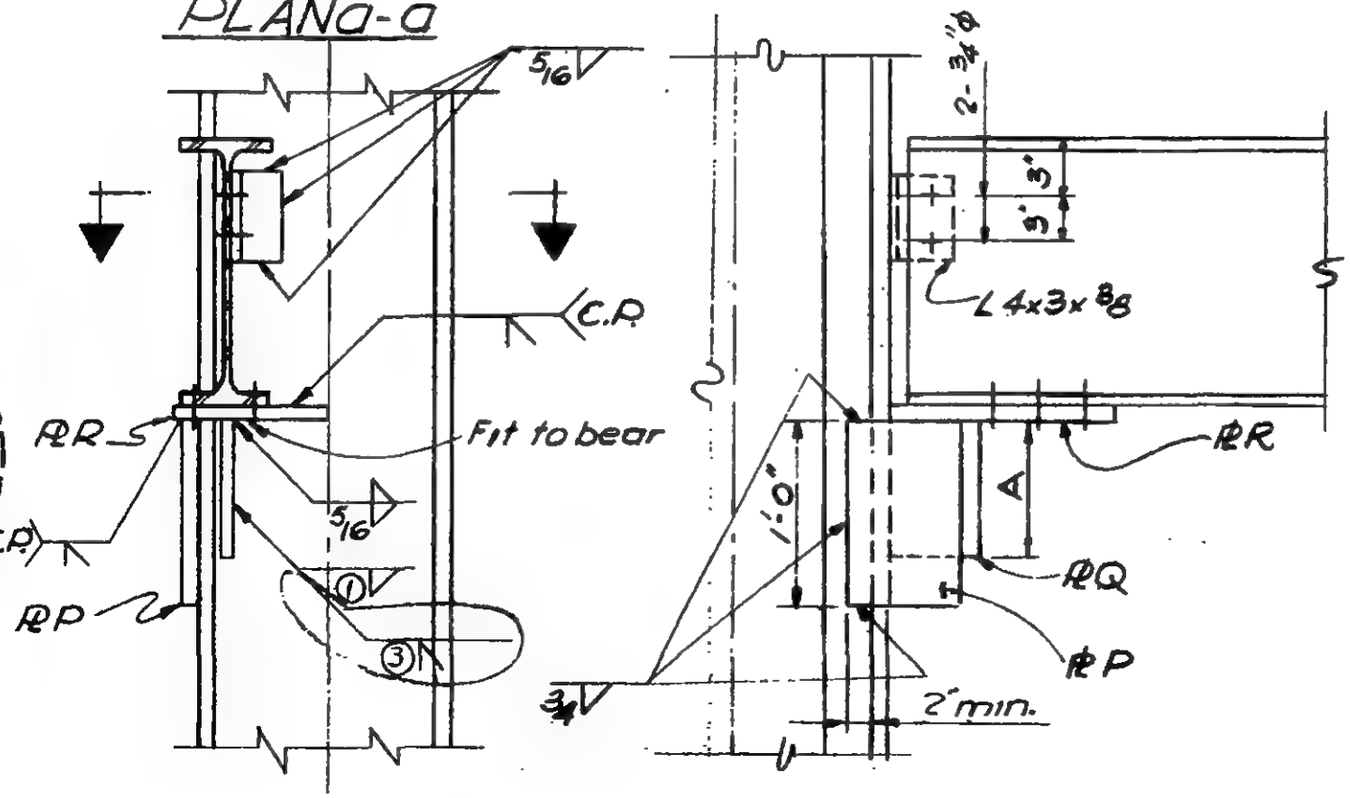

SECTION b-b

SECTION c-c

LESLIE E. ROBERTSON — LICENSED PROFESSIONAL ENGINEER — No. 34360 — UNIVERSITY OF THE STATE OF NEW YORK

6-AB1-2

SKILLING - HELLE - CHRISTIANSEN - ROBERTSON Structural & Civil Engineers

PROJECT: THE WORLD TRADE CENTER | TITLE: SCHEDULE FOR DETAIL 201 A-F | DATE: 7-28-67

REVISIONS
8-5-67
9-15-67
12-21-67

REF. DWG	G-AB1-2	G-AB1-2	G-AB1-2	G-AB1-2	G-AB1-2.2	G-AB1-2.2
	201 A	201 B	201 C	201 D	201 E	201 F
PLATES						
P	8" x 7/8"	8" x 7/8"	8" x 7/8"	8" x 7/8"	1/2"	5/8"
Q	5" x 3/8"	5" x 3/8"	5" x 3/8"	6" x 3/8"	1/2"	—
R	10 1/2" x 1/2"	10 1/2" x 1/2"	10 1/2" x 1/2"	10 1/2" x 1/2"	—	—
DIMENSIONS						
A	0'-6"	0'-9"	0'-10"	1'-2"	0'-10"	—
B	—	—	—	—	0'-5"	—
BOLTS						
K	6 - 7/8" ϕ	6 - 7/8" ϕ	6 - 7/8" ϕ	6 - 7/8" ϕ	4 - 3/4" ϕ	4 - 7/8" ϕ
L	—	—	—	—	2 - 3/4" ϕ	—
WELDS						
①	—	—	—	—	1/4	—
②	—	—	—	—	5/16	—
③	C.P.	C.P.	C.P.	C.P.	—	—
ANGLES						
R	—	—	—	—	3 1/2 x 3 1/2 x 5/16	—

STEPHEN F. E. ROBERTSON LICENSED PROFESSIONAL ENGINEER No. 34360 STATE OF NEW YORK

G-AB1-2.1

WORTHINGTON, SKILLING, HELLE & JACKSON — Civil & Structural Engineers

PROJECT THE WORLD TRADE CENTER | TITLE CONNECTION DETAIL 201 E,F,G,H,I | DATE 4-5-67

REVISIONS
9-13-67
10-2-67
10-5-67

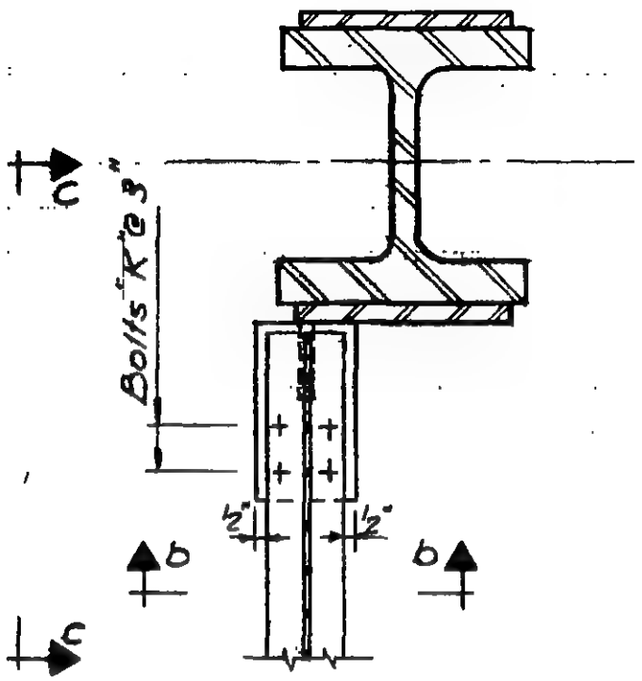

Plan a-a

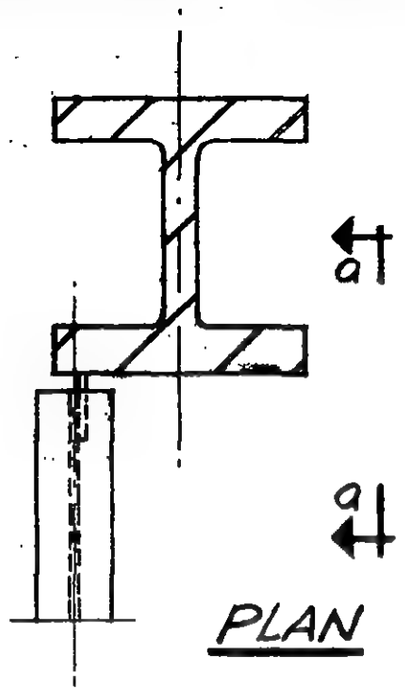

PLAN

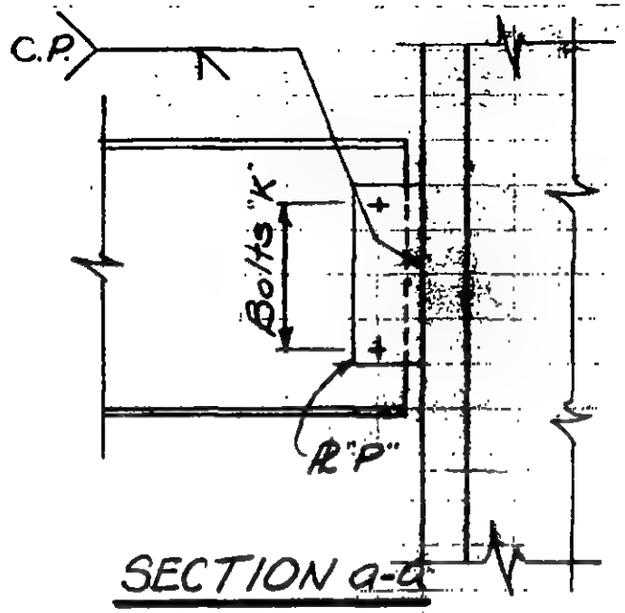

SECTION a-a

DETAIL 201 F,G,H,I,P,Q

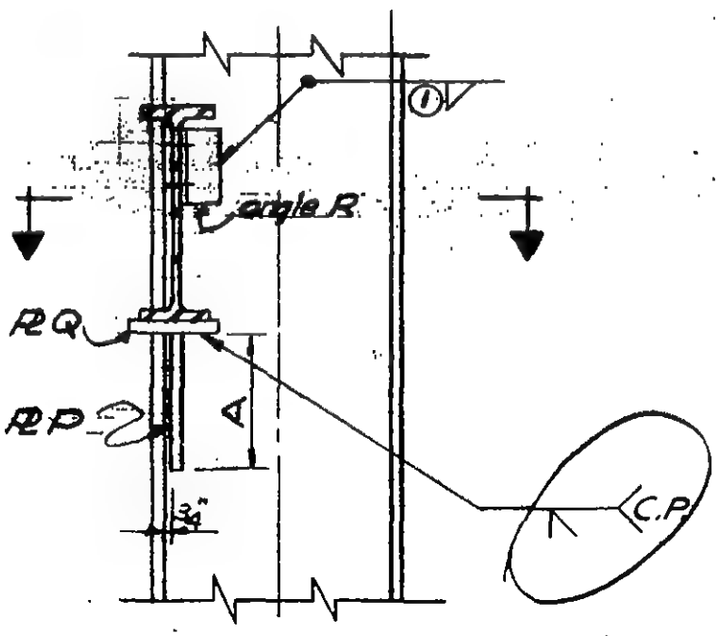

Section b-b

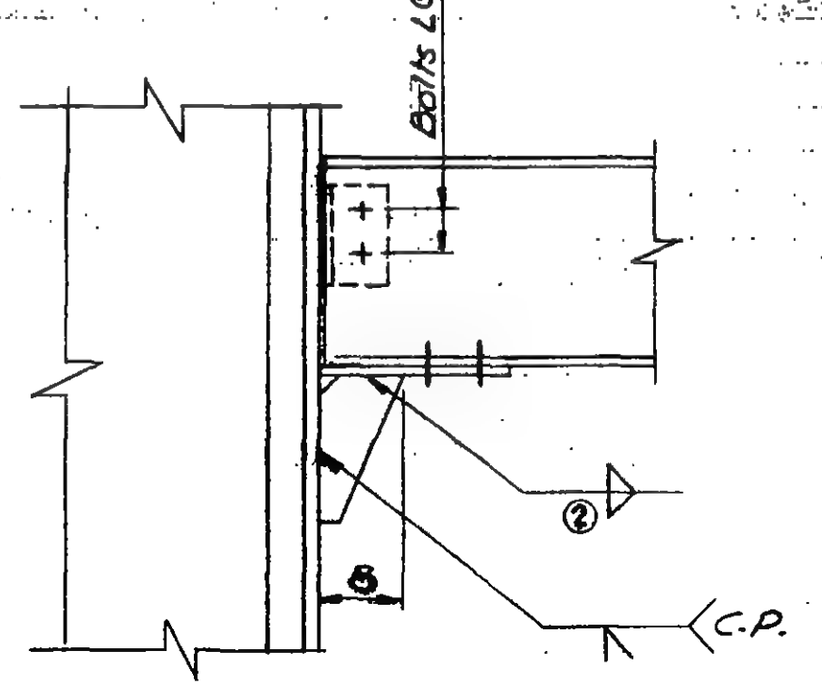

Section c-c

DETAIL 201 E

LICENSED PROFESSIONAL ENGINEER
LESLIE E. ROBERTSON
No. 34360
UNIVERSITY OF THE STATE OF NEW YORK

6-AB1-2.2

SKILLING - HELLE - CHRISTIANSEN - ROBERTSON Structural & Civil Engineers

PROJECT THE WORLD TRADE CENTER | TITLE SCHEDULE FOR DETAIL 201 G, H, J, K, L | DATE 9-15-67

REVISIONS
10-2-67
10-5-67

REF. DWG.	G-AB1-2.2	G-AB1-2.2	G-AB1-2.2	G-AB1-2.4	G-AB1-2.4	G-AB1-2.5
	201G	201H	201I	201-J	201K	201L
PLATES					See ref dwg.	
P	1/2"	5/8"	1"	—		7/8
BOLTS						
K	5-1"ϕ	2-7/8"ϕ	2-1" ϕ (A490)	10-3/4" ϕ		8-7/8" ϕ
ANGLES						
P	—	—	—	6×6×½×1'-3"		—
WELDS						
①	—	—	—	3/8		—

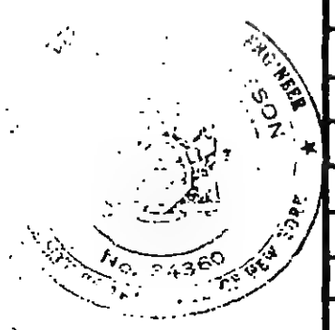

6-AB1-2.3

SKILLING - HELLE - CHRISTIANSEN - ROBERTSON — Structural & Civil Engineers

PROJECT THE WORLD TRADE CENTER | TITLE CONNECTION DETAIL 201 J, K, S, T | DATE

REVISIONS

10-5-67
9-25-68

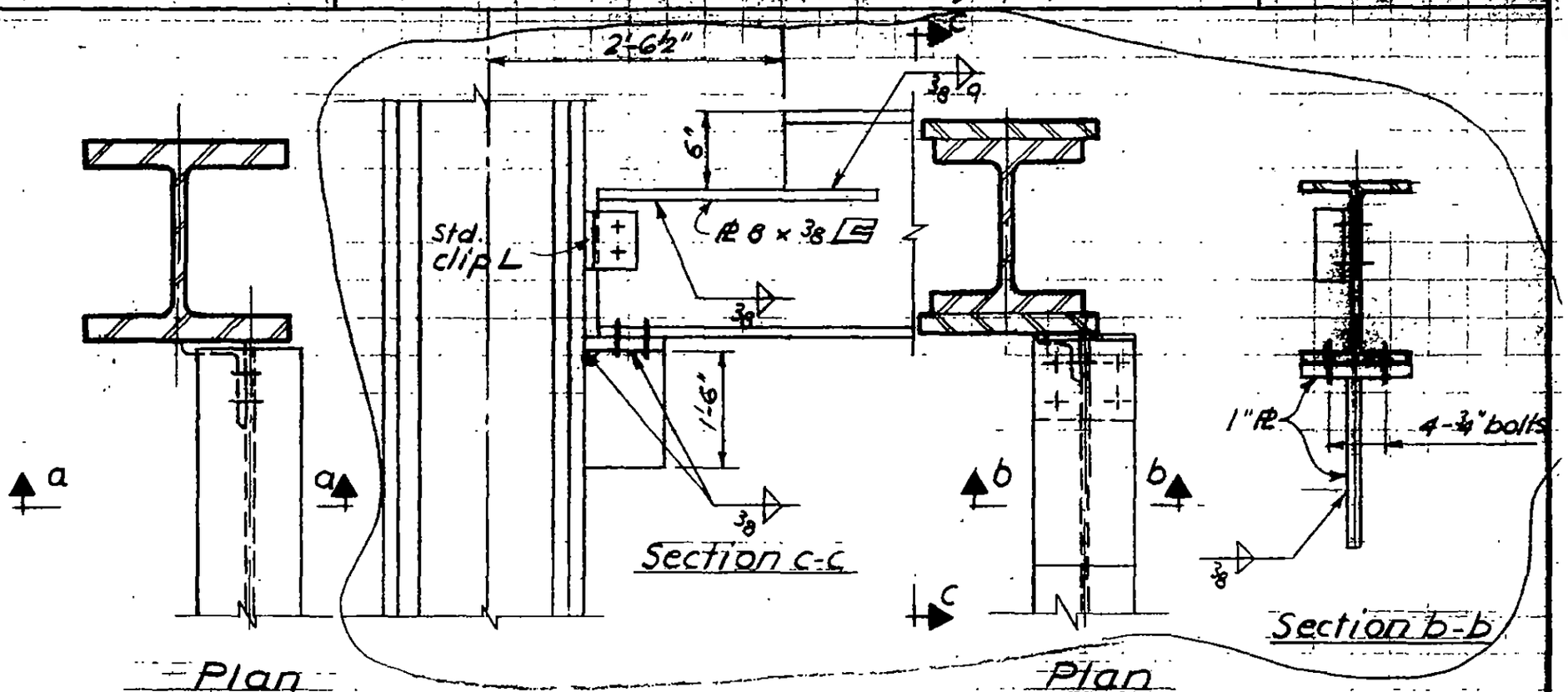

Plan
Detail 201 J

Plan
Detail 201 K (col. w/ COVER PL's)

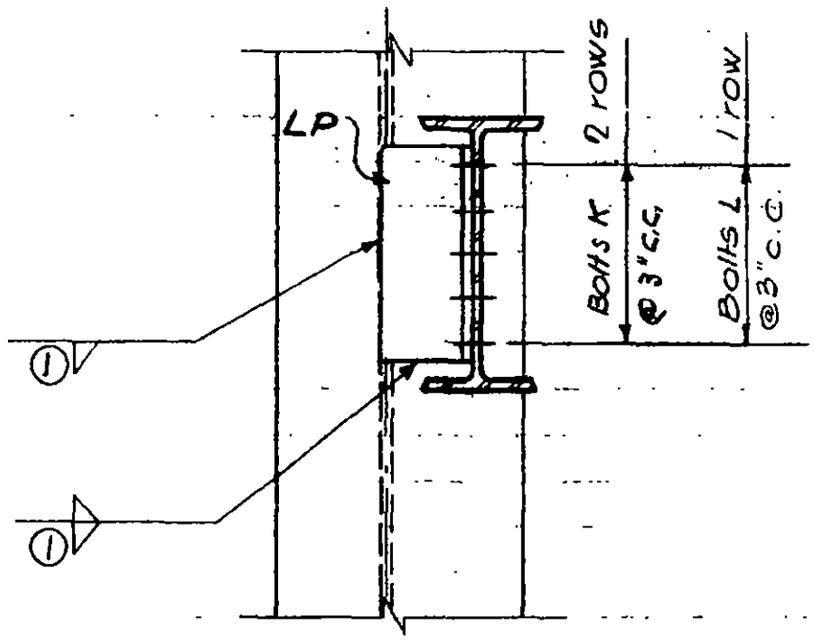

Section a-a

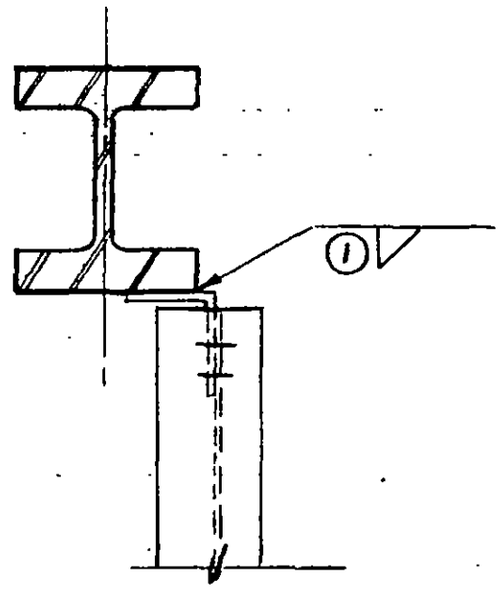

Plan
Detail 201 S, T

LICENSED PROFESSIONAL ENGINEER
LESLIE E. ROBERTSON
No. 34360
UNIVERSITY OF THE STATE OF NEW YORK

6-AB1-2.4

SKILLING - HELLE - CHRISTIANSEN - ROBERTSON — Structural & Civil Engineers

PROJECT THE WORLD TRADE CENTER | TITLE CONNECTION DETAIL 201 L, M & R | DATE 10-5-67

REVISIONS

10-31-67

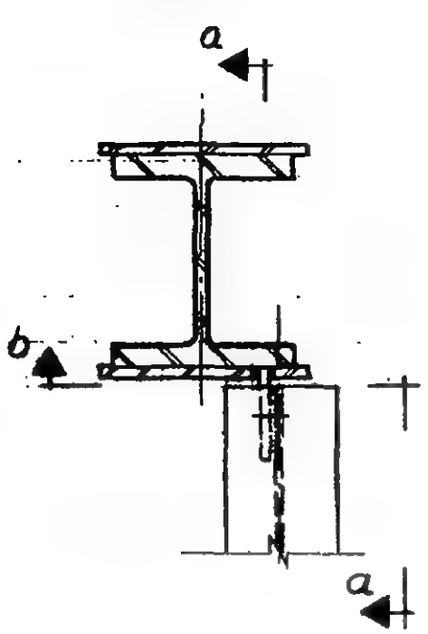

Plan

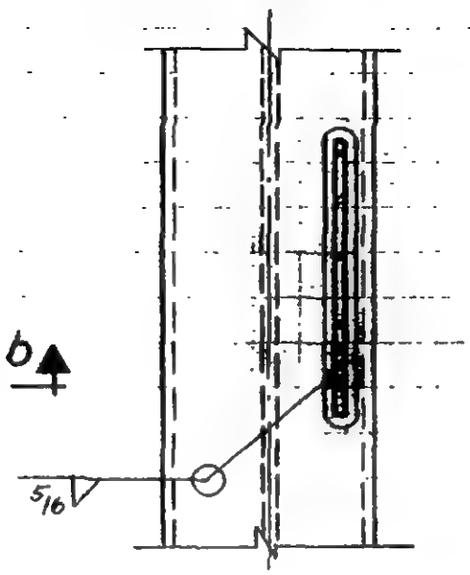

Section b-b

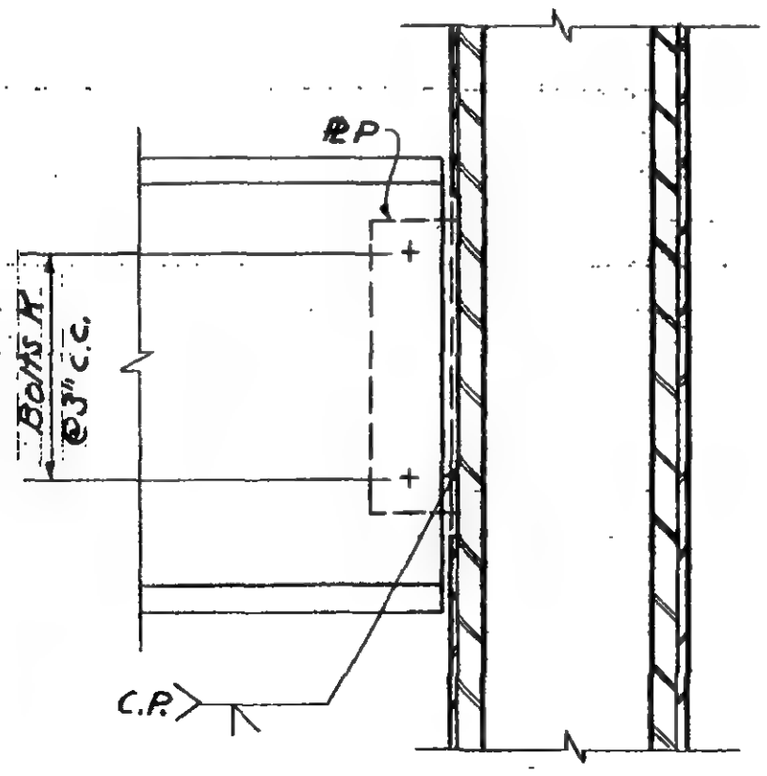

Section a-a

Detail 201L

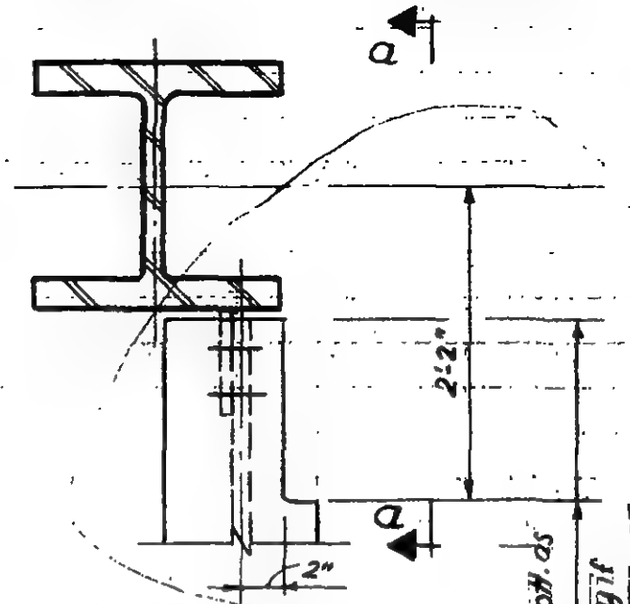

Plan

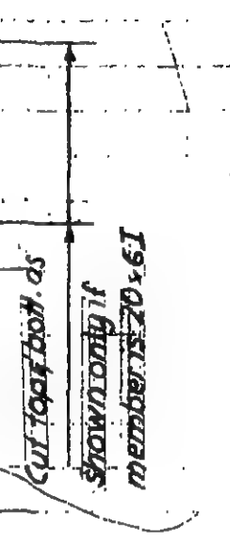

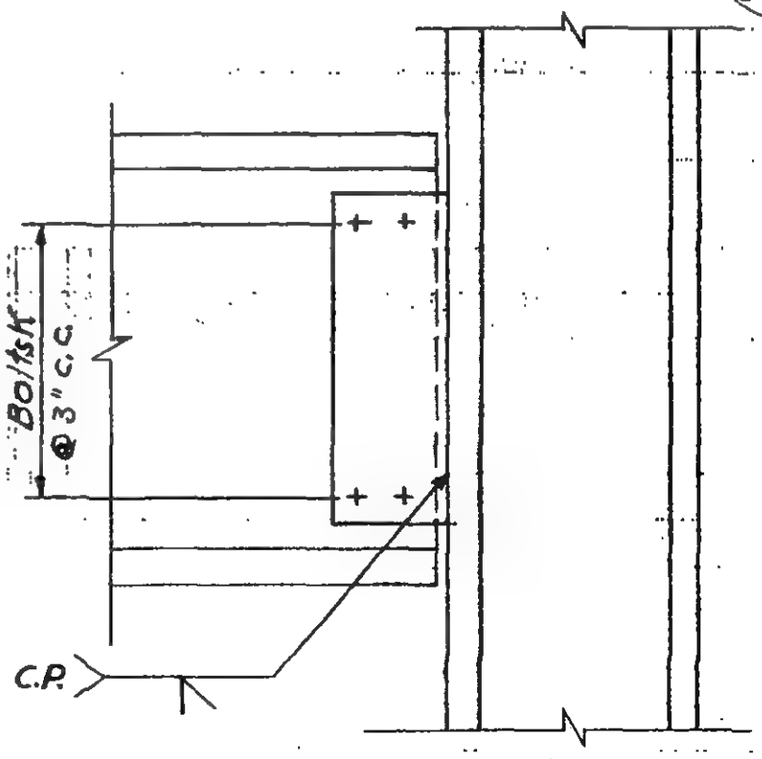

Section a-a

Details 201 M & R

6-ABI-2.5

SKILLING - HELLE - CHRISTIANSEN - ROBERTSON Structural & Civil Engineers

PROJECT THE WORLD TRADE CENTER | TITLE SCHEDULE FOR DETAIL 201 M,P,Q,R,S,T | DATE 10-5-67

REVISIONS

7/14/69

REF. DWG.	G-AB1-2.5	G-AB1-2.2	G-AB1-2.2	G-AB1-2.5	G-AB1-2.4		G-AB1-2.4
	M	P	Q	R	S	T	X
PLATES							
P	7/8"	1/2"	3/8"	7/8	—	—	—
BOLTS							
K	14-1"ϕ	4-7/8"ϕ	4-3/4"ϕ	12-7/8"ϕ	—	4-7/8"ϕ	—
L	—	—	—	—	4-7/8"ϕ	—	4-7/8"ϕ A490
ANGLES							
P	—	—	—	—	6x4x5/8x1'0"	6x6x5/8x1'6"	6x4x5/8x1'0"
WELDS							
①	—	—	—	—	1/4	1/4	3/8

LICENSED PROFESSIONAL ENGINEER LESLIE E. ROBERTSON No. 34360 UNIVERSITY OF THE STATE OF NEW YORK

G-AB1-2.6

WORTHINGTON, SKILLING, HELLE & JACKSON — Civil & Structural Engineers

PROJECT: THE WORLD TRADE CENTER | TITLE: ~~CONNECTION DETAIL~~ 202 A, B, C, D, E, F, G | DATE: 5-22-67

REVISIONS
7-28-67
8-5-67
8-14-67
9-15-67
10-2-67
12-21-67

NOTE
For sections see
6-ABI-5.2 & 5.3

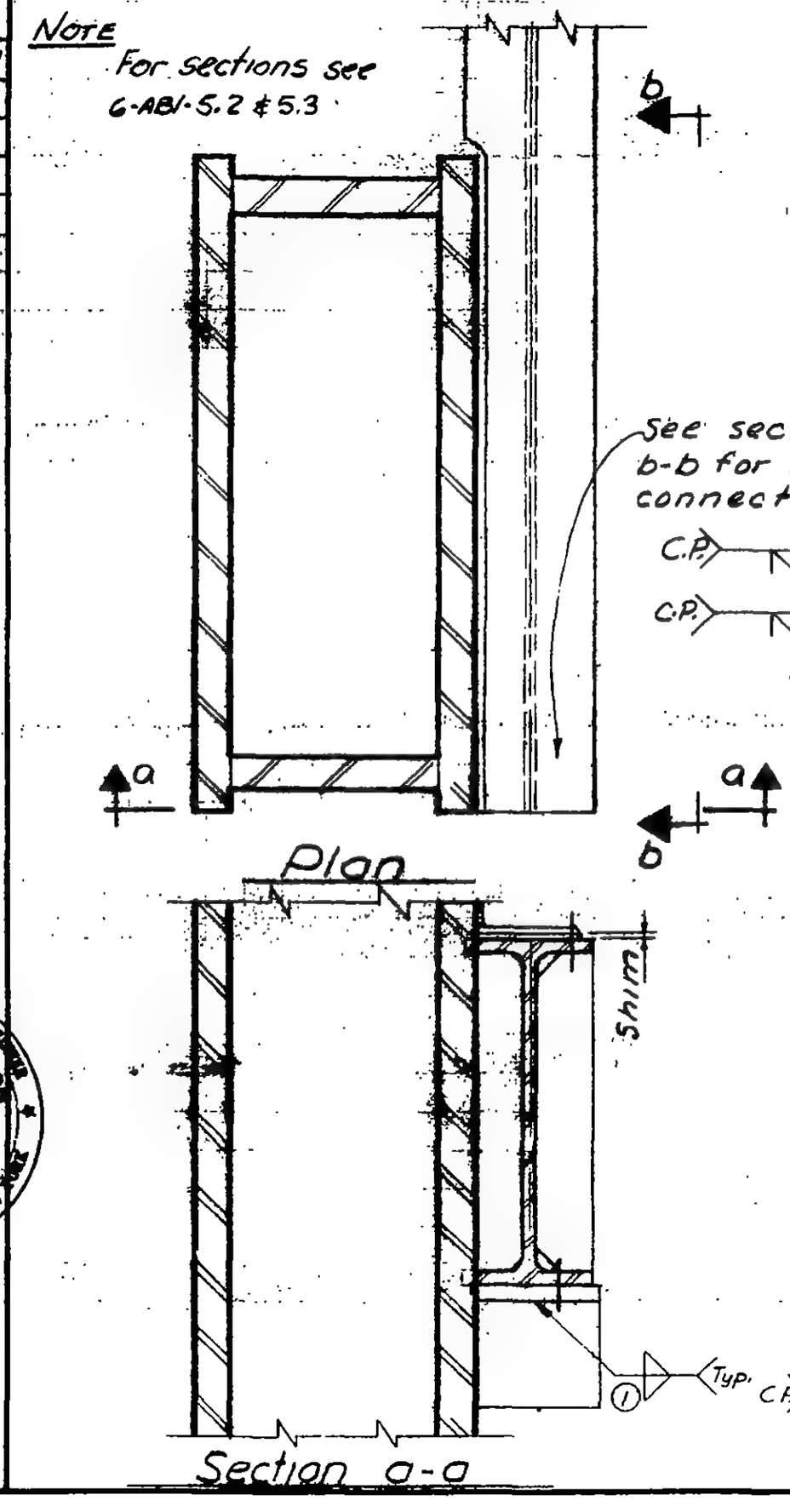

Section a-a

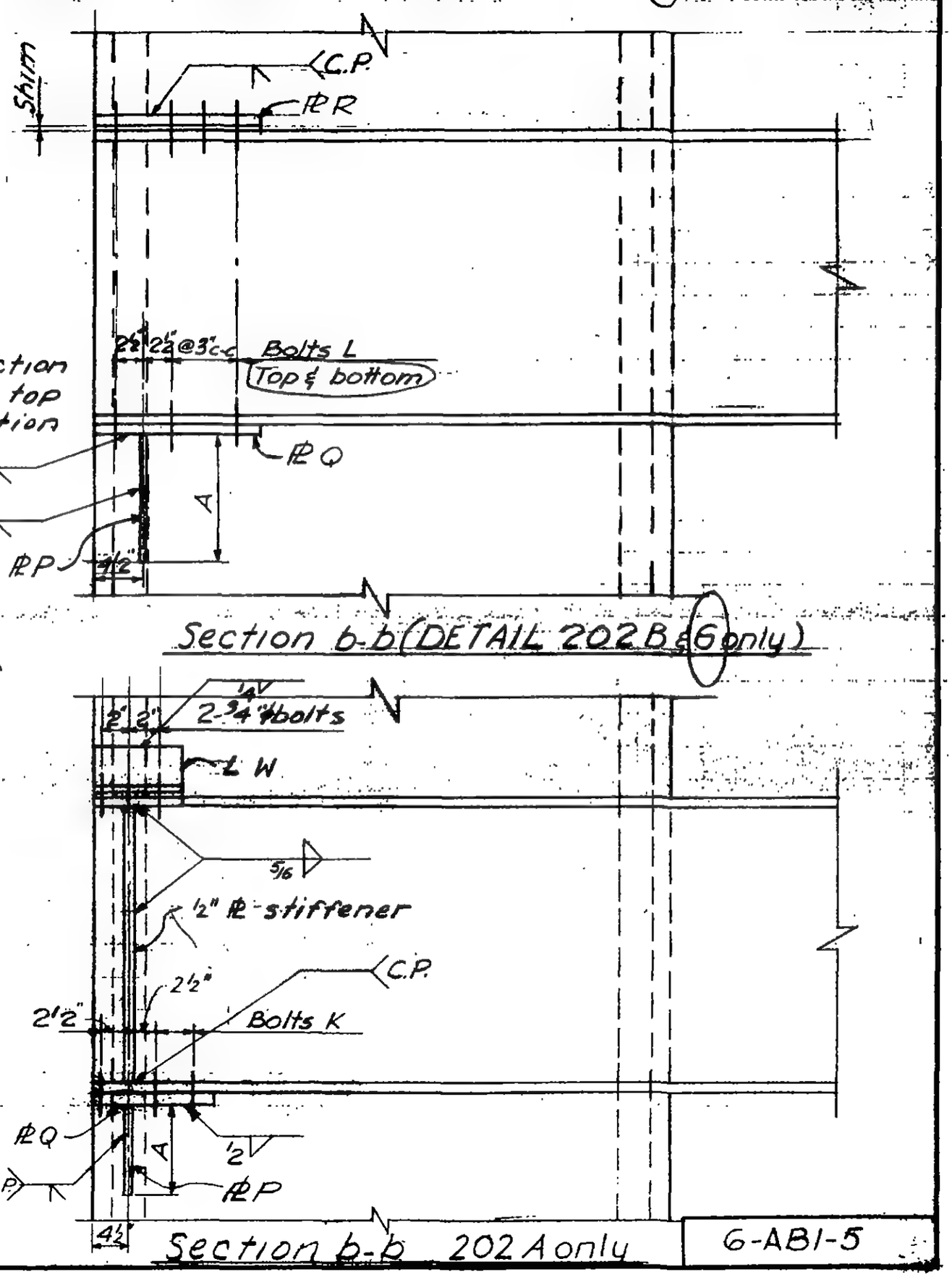

Section b-b (DETAIL 202 B & G only)

Section b-b 202 A only

6-ABI-5

LICENSED PROFESSIONAL ENGINEER — LESLIE E. ROBERTSON — No. 34968 — UNIVERSITY OF THE STATE OF NEW YORK

SKILLING - HELLE - CHRISTIANSEN - ROBERTSON Structural & Civil Engineers

PROJECT THE WORLD TRADE CENTER | TITLE SCHEDULE FOR DETAIL 202 A, B, C, D, E, F | DATE 8-5-67

REVISIONS
8-14-67
9-15-67
10-2-67
11-10-67

REF. DWG.	6-ABI-5	6-ABI-5	6-ABI-5.2	6-ABI-5.2	6-ABI-5.3	6-ABI-5.3
	202A	202B	202C	202D	202E	202F
PLATES						
P	5/8"	5/8"	3/4"	—	—	—
Q	5/8"	3/4"	3/4"	—	—	—
R	—	3/4"	—	—	—	—
S	—	—	1"	1"	3/4"	1"
T	—	—	1"	1"	3/4"	1"
U	—	—	1/2"	3/8"	3/8"	3/8"
V	—	—	—	—	1/2"	3/4"
DIMENSIONS						
A	1'-4"	1'-4"	0'-9"	—	—	—
B	—	—	1'-3"	1'-6"	1'-3"	1'-8"
C	—	—	2'-0"	2'-0"	2'-9"	3'-0"
BOLTS						
K	3-3/4"ϕ	—	2-3/4"ϕ	—	—	—
L	—	4-3/4"ϕ	—	16-1 1/8"ϕ	—	—
M	—	—	7-1"ϕ	7-1"ϕ	9-1 1/8"ϕ (A490)	11-1 1/8" (A490)
ANGLES						
N	5x3x5/16x0'-5 1/2"	—	—	—	—	—
WELDS						
(1)	5/16	5/16	1/2"	1/2"	—	—
(2)	—	—	1/2"	—	—	—

LICENSED PROFESSIONAL ENGINEER LESLIE E. ROBERTSON No. 34360 UNIVERSITY OF THE STATE OF NEW YORK

6-ABI-5.1

SKILLING - HELLE - CHRISTIANSEN - ROBERTSON Structural & Civil Engineers

PROJECT: THE WORLD TRADE CENTER | TITLE: CONNECTION DETAIL 202C, D | DATE: 8-14-67

REVISIONS
11-23-67

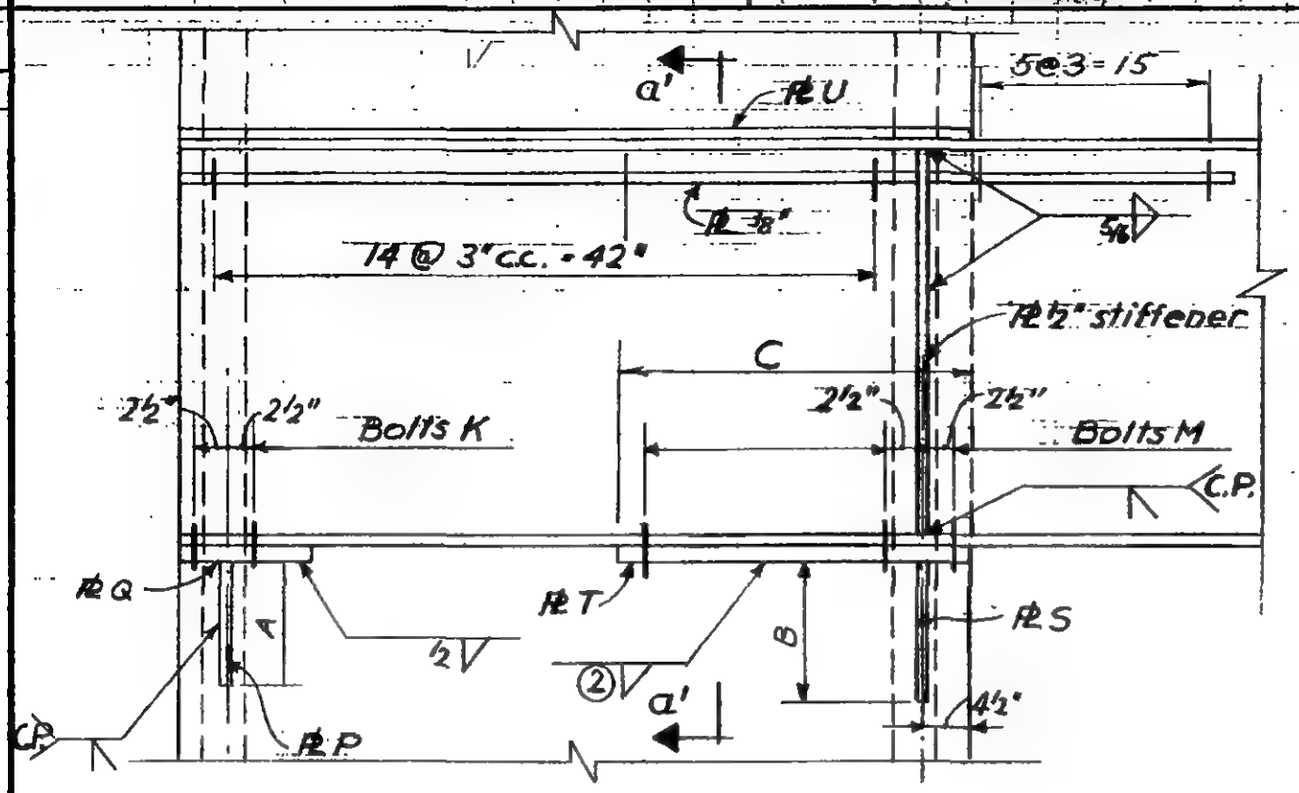

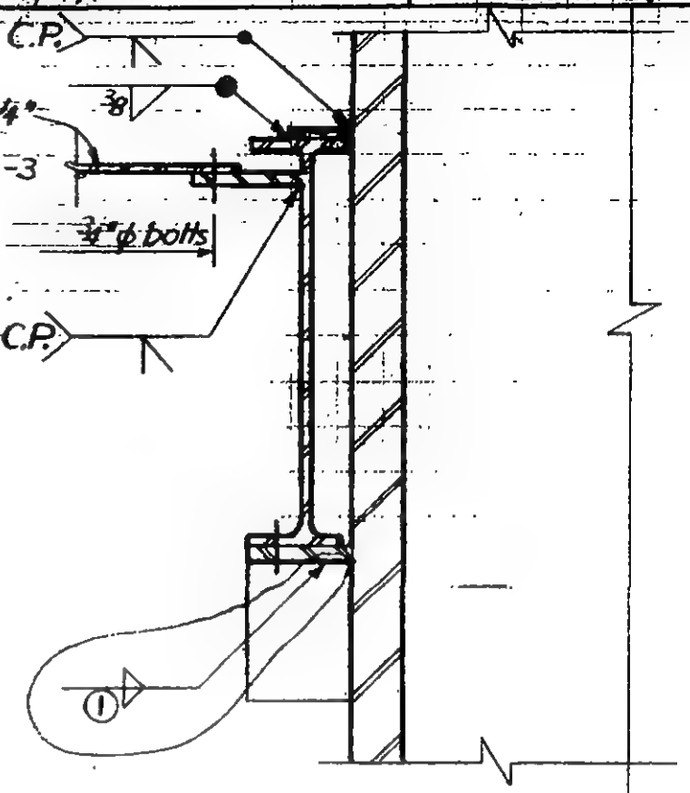

Section b-b, 202 C only

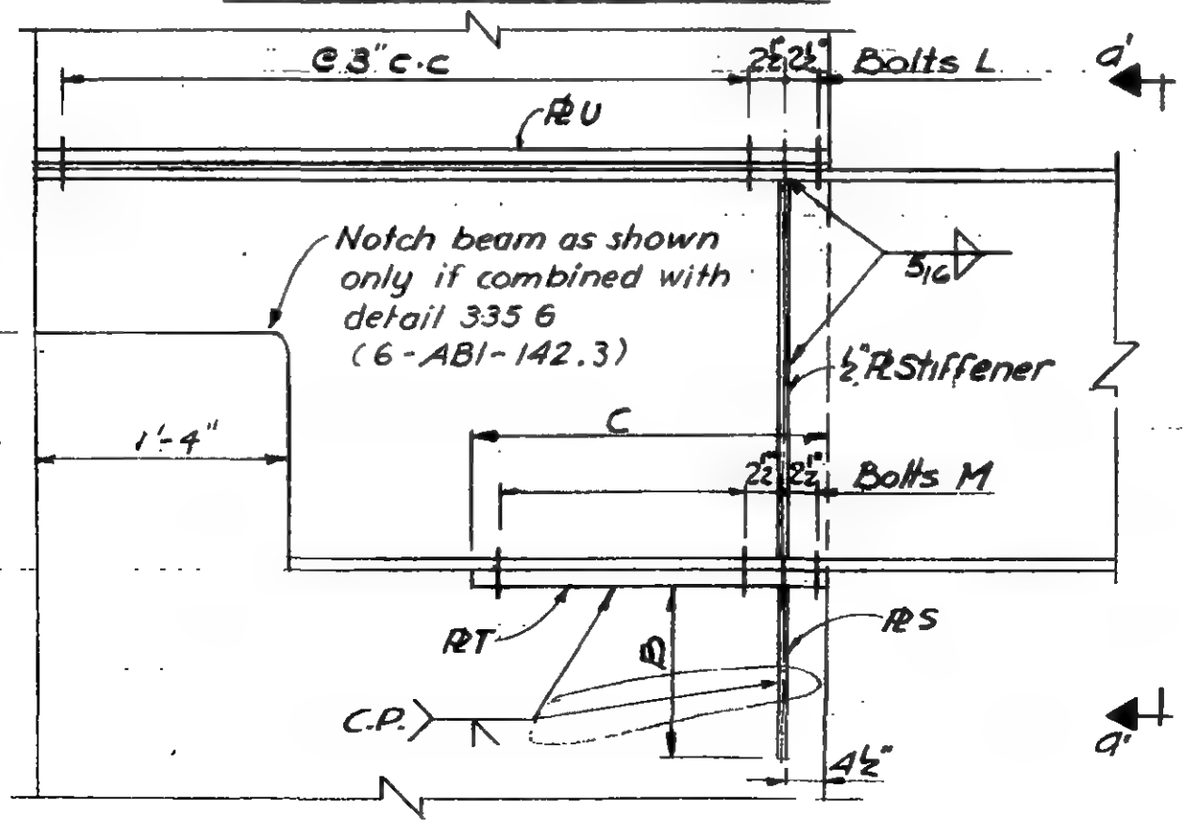

Section b-b, 202 D

Section a'-a'

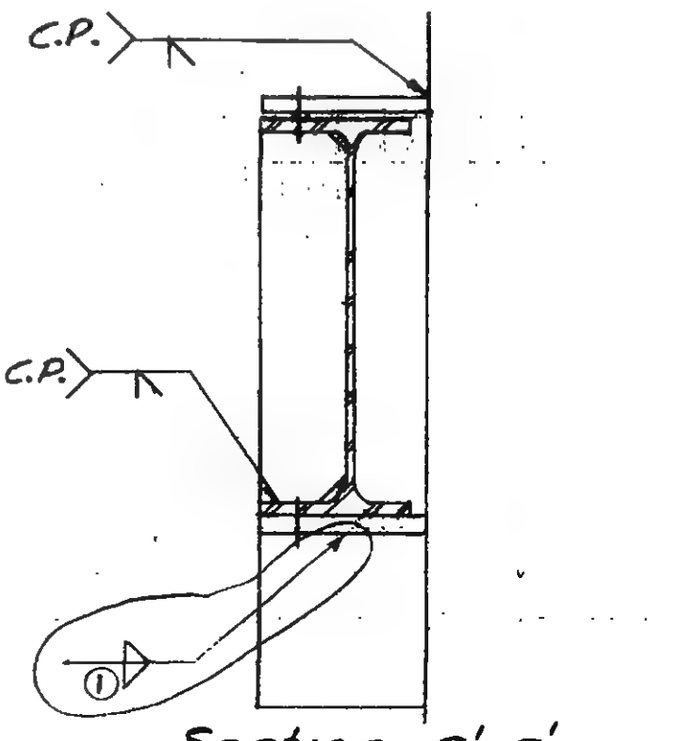

Section a'-a'

LICENSED PROFESSIONAL ENGINEER
LESLIE E. ROBERTSON
No. 34360
UNIVERSITY OF THE STATE OF NEW YORK

6-AB1-5.2

SKILLING - HELLE - CHRISTIANSEN - ROBERTSON Structural & Civil Engineers

PROJECT THE WORLD TRADE CENTER | TITLE CONNECTION DETAIL 202E&F | DATE 9-15-67

REVISIONS

10-2-67

11-10-67

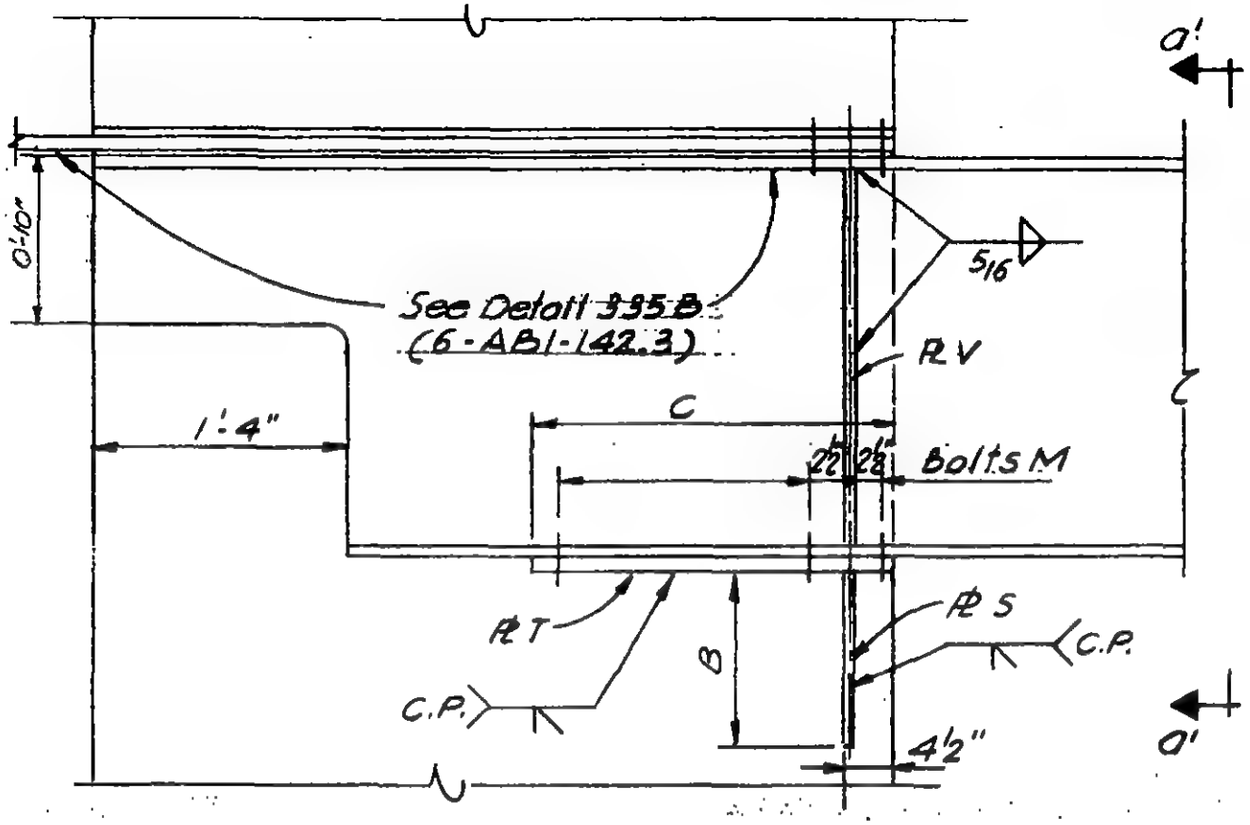

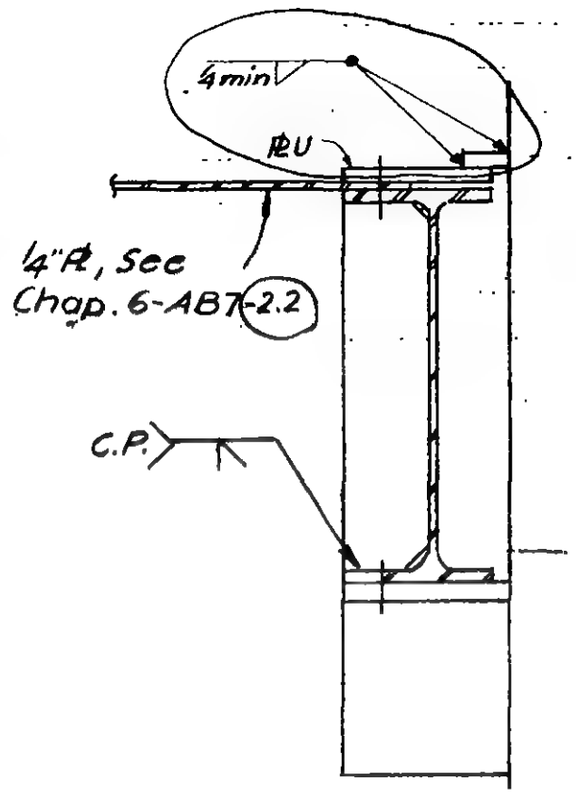

Section a'-a'

Section b-b, 202E&F

(See dwg 6-ABI-5 for plan)

L. ROBERTSON ENGINEER
No. 34360
THE STATE OF NEW YORK

6-ABI-5.3

SKILLING - HELLE - CHRISTIANSEN - ROBERTSON Structural & Civil Engineers

PROJECT THE WORLD TRADE CENTER | TITLE SCHEDULE FOR DETAIL 2026 | DATE 12-21-67

REVISIONS

REF. DWG.	6-AB1-5					
	2026					
PLATES						
P	1"					
Q	1"					
R	¾"					
S	—					
T	—					
U	—					
DIMENSIONS						
A	0'-10½"					
B	—					
BOLTS						
L	5 - ⅞" ϕ					
M	—					
WELDS						
①	—					

Check

LICENSED PROFESSIONAL ENGINEER
LESLIE E. ROBERTSON
No. 34360
UNIVERSITY OF THE STATE OF NEW YORK

6-AB1-5.4

SKILLING - HELLE - CHRISTIANSEN - ROBERTSON — Structural & Civil Engineers

PROJECT: WORLD TRADE CENTER | TITLE: CONNECTION DETAIL 203A | DATE: 5-22-67

REVISIONS

9-15-67

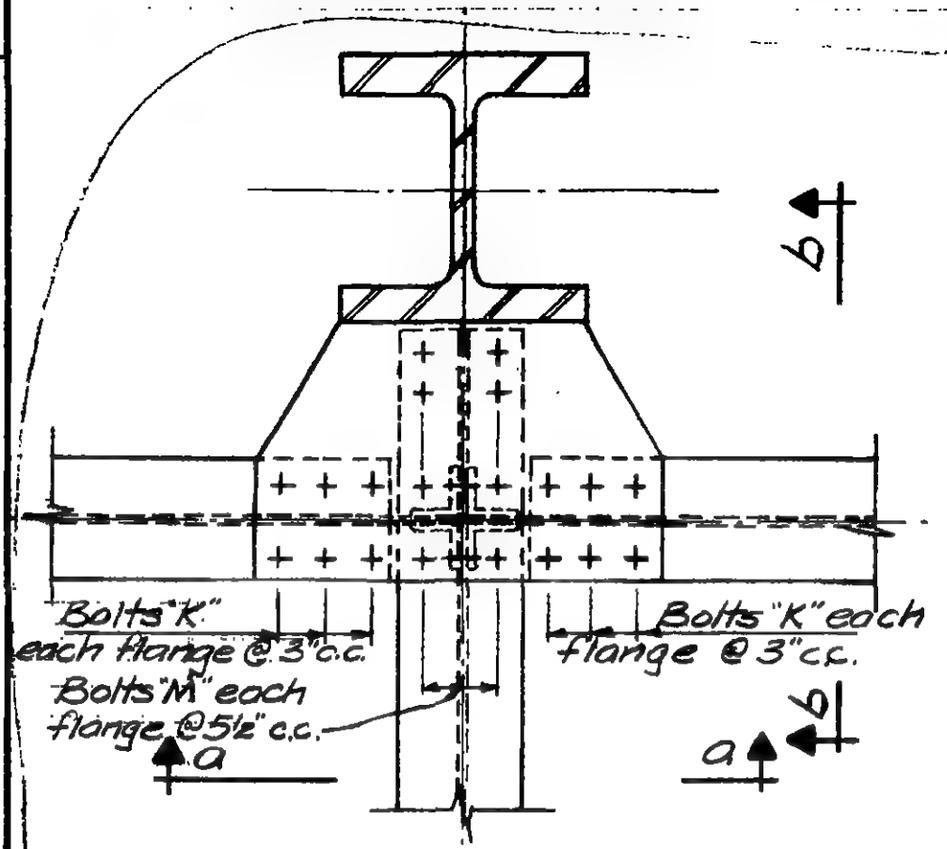

PLAN

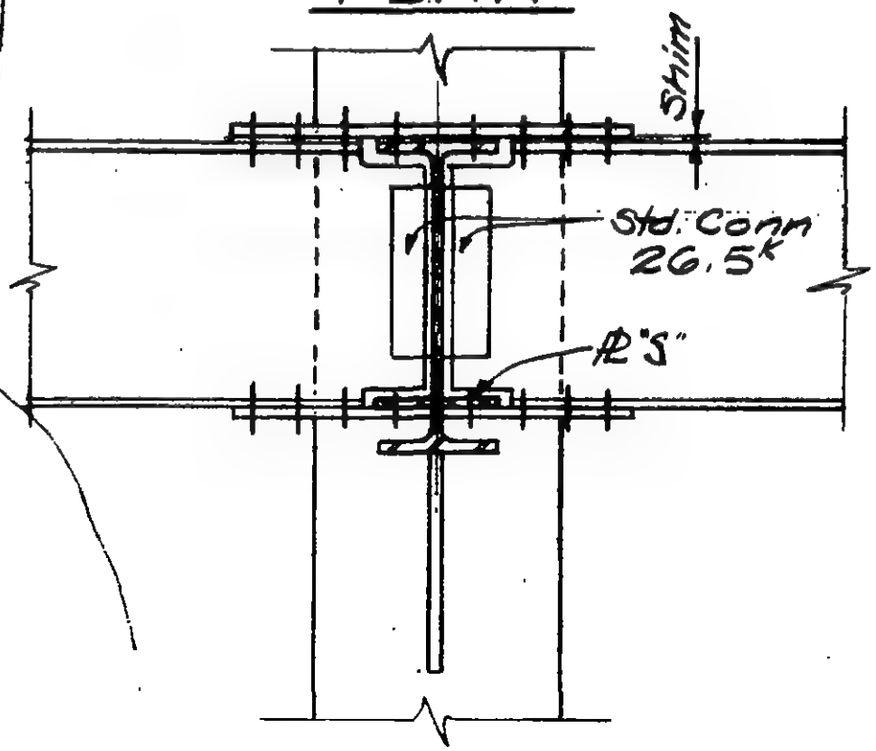

Section a-a

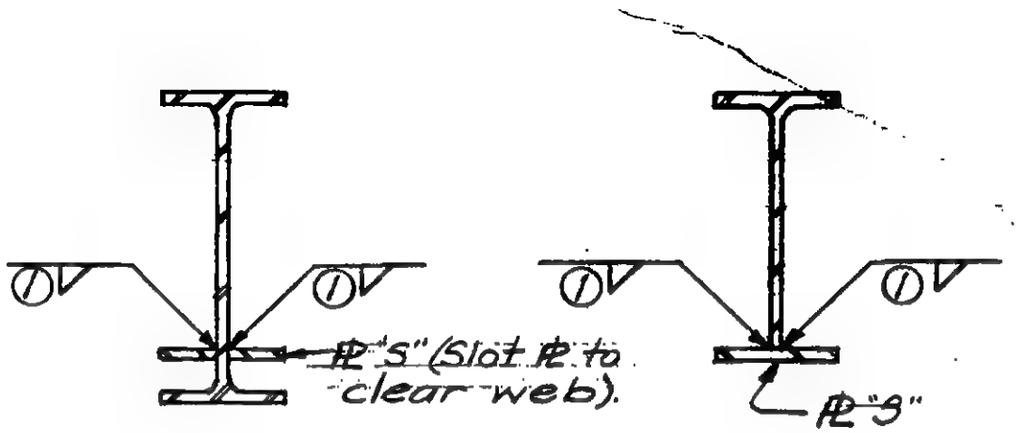

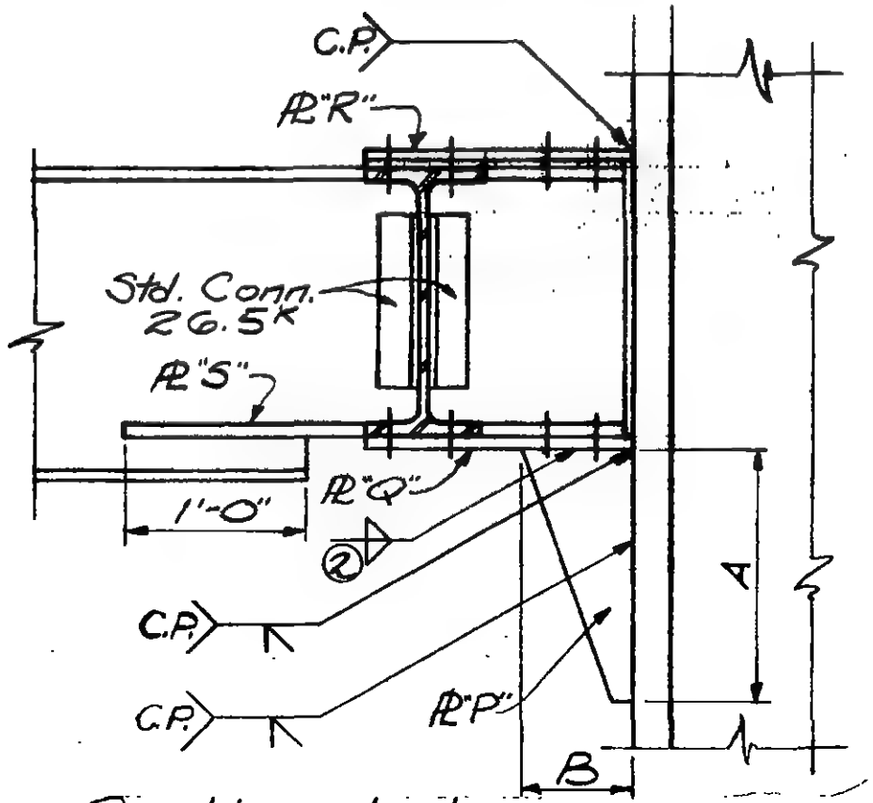

Section b-b

6-AB1-6

SKILLING - HELLE - CHRISTIANSEN - ROBERTSON Structural & Civil Engineers

PROJECT THE WORLD TRADE CENTER | TITLE SCHEDULE FOR DETAIL 203A | DATE 9-15-67

REVISIONS

	203A					
PLATES						
P	3/4"					
Q	3/4"					
R	1/2"					
S	8" x 5/8"					
DIMENSIONS						
A	1'-4"					
B	0'-9"					
BOLTS						
K	6-3/4"Φ					
M	8-3/4"Φ					
WELDS						
①	3/8					
②	5/16					

G-AB1-G.1

SKILLING - HELLE - CHRISTIANSEN - ROBERTSON Structural & Civil Engineers

PROJECT THE WORLD TRADE CENTER | TITLE CONNECTION DETAIL 203 B, C | DATE 10-5-67

REVISIONS

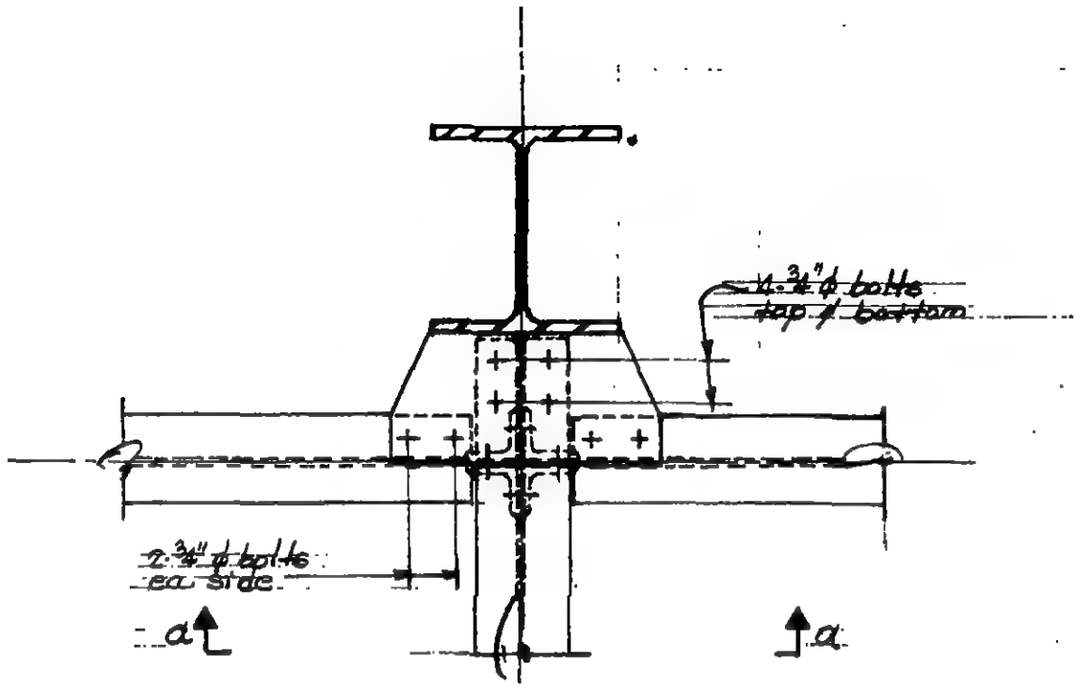

PLAN

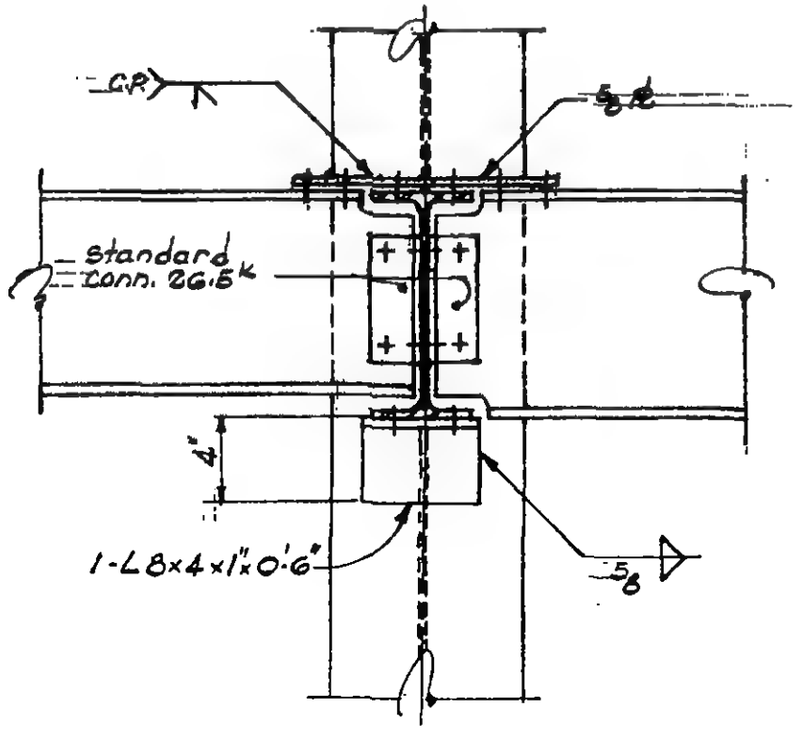

Section a-a (203 B only)

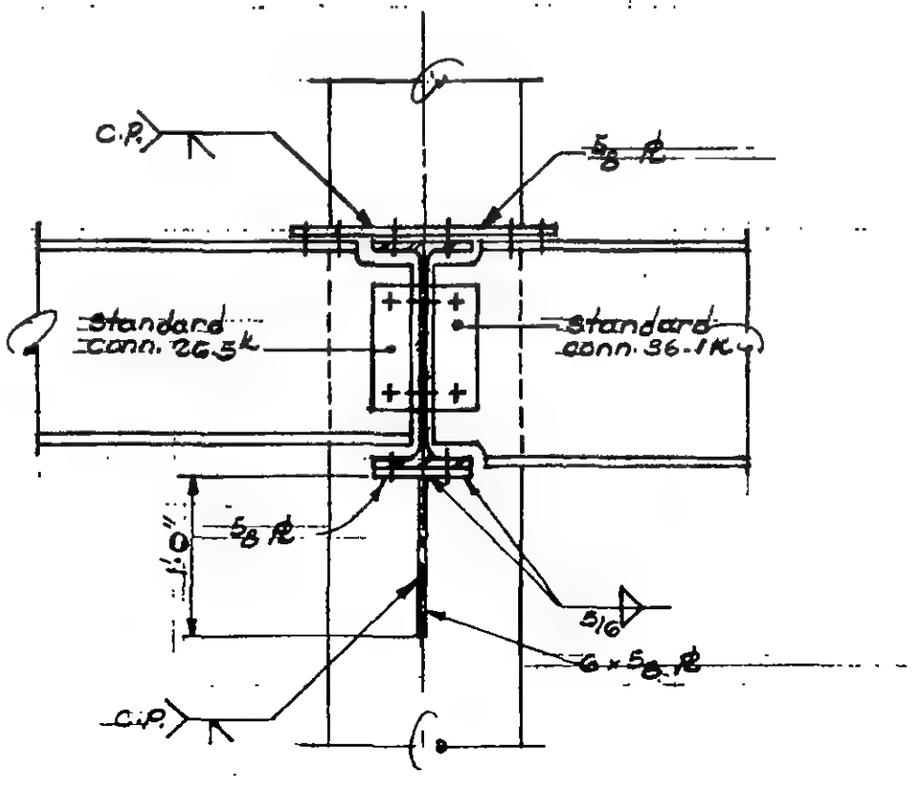

Section a-a (203 C only)

G-AB1-6.2

LICENSED PROFESSIONAL ENGINEER
LESLIE E. ROBERTSON
No. 34360
UNIVERSITY OF THE STATE OF NEW YORK

SKILLING, HELLE, CHRISTIANSEN, ROBERTSON — Structural & Civil Engineers

PROJECT THE WORLD TRADE CENTER | TITLE CONNECTION DETAIL 203D | DATE 9/30/69

REVISIONS

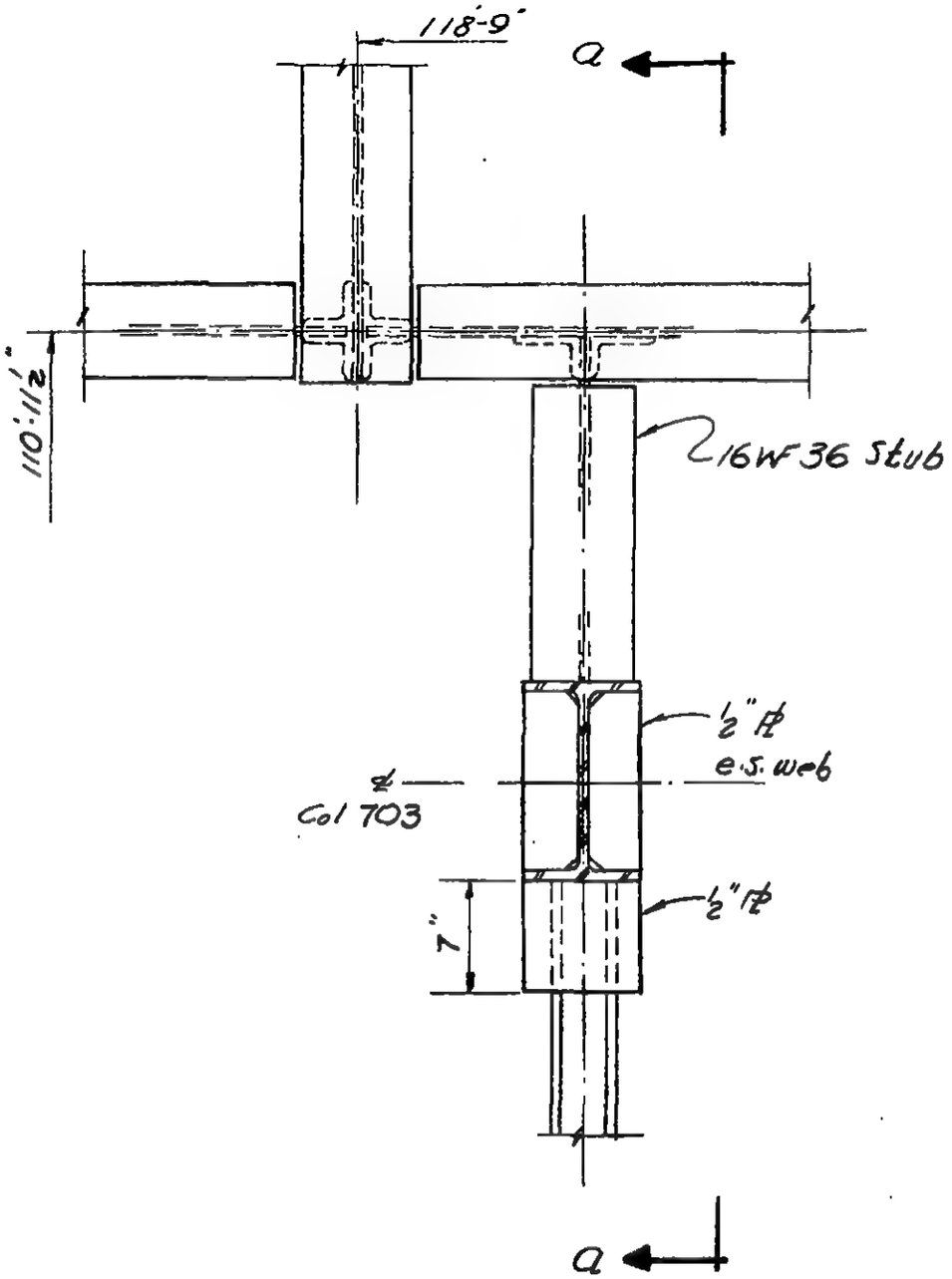

PLAN

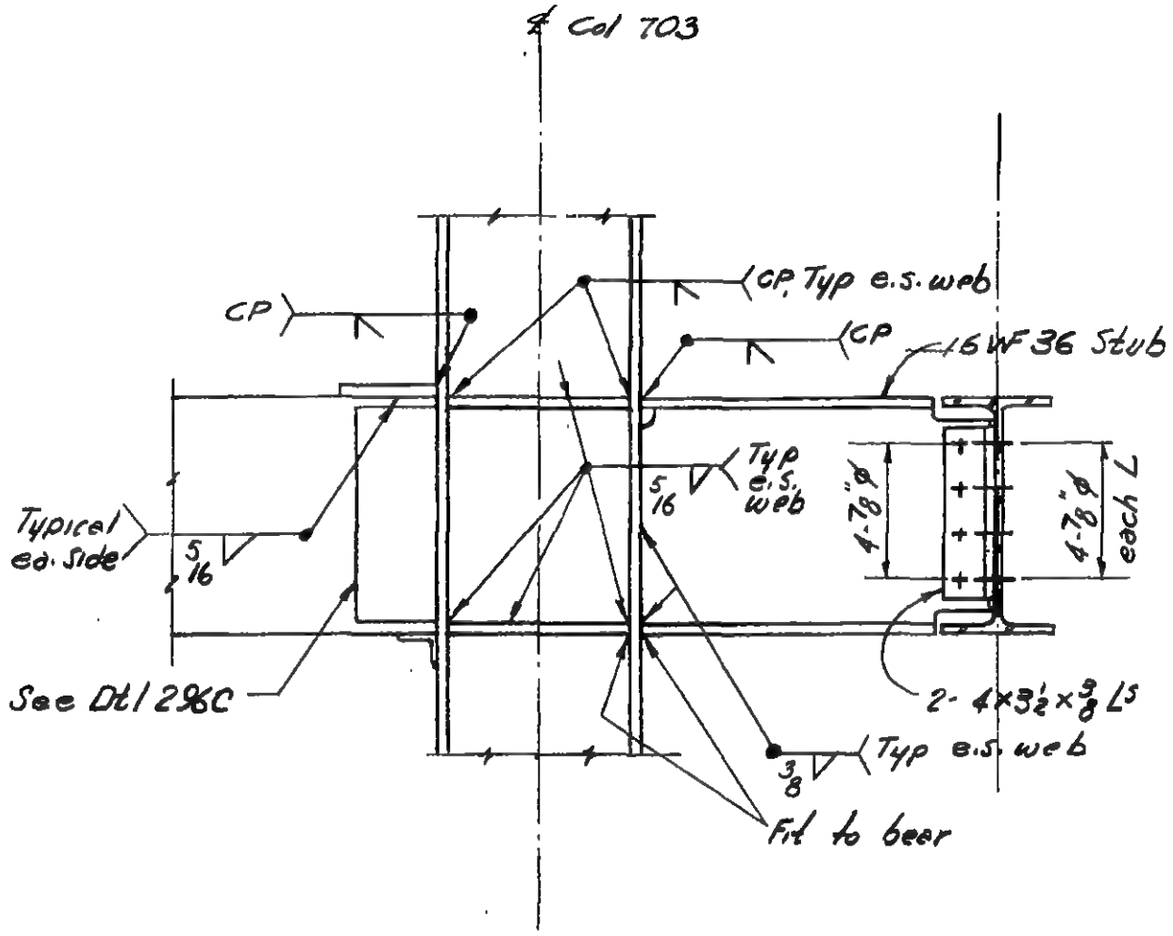

Section a a

6-AB1-6.3

LICENSED PROFESSIONAL ENGINEER — LESLIE E. ROBERTSON — No. 34360 — UNIVERSITY OF THE STATE OF NEW YORK

DESIGNED

DRAWN

REVIEWED

WORTHINGTON, SKILLING, HELLE & JACKSON — Civil & Structural Engineers

PROJECT THE WORLD TRADE CENTER | TITLE CONNECTION DETAIL 204 A, B, C | DATE 6-5-67

REVISIONS
10-2-67
10-5-67

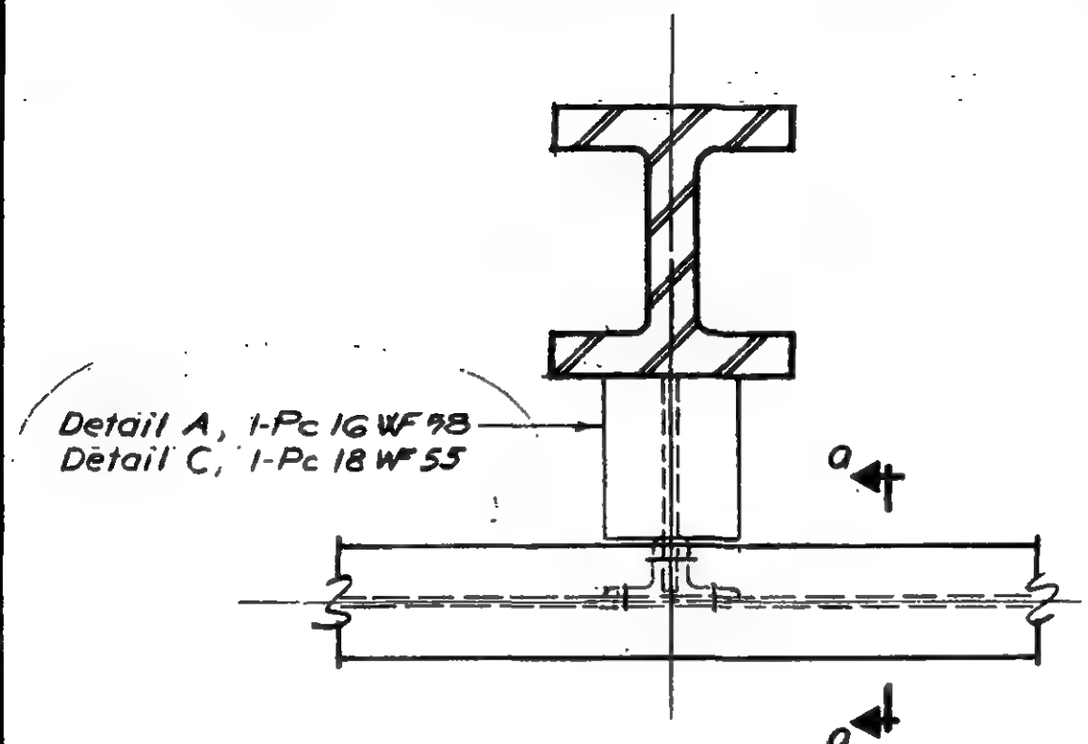

Plan
Details 204 A,C

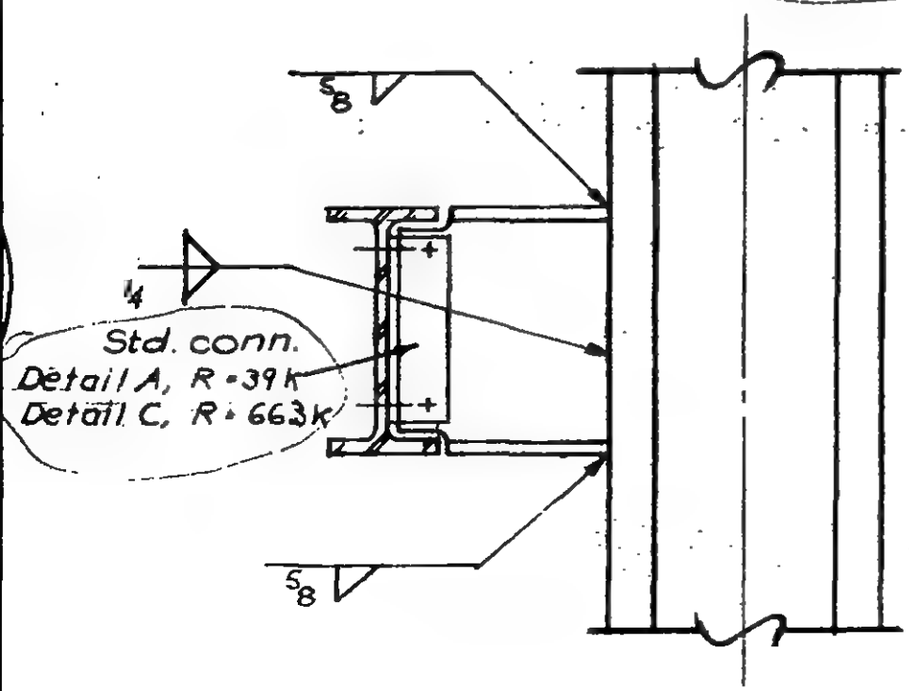

Section a-a

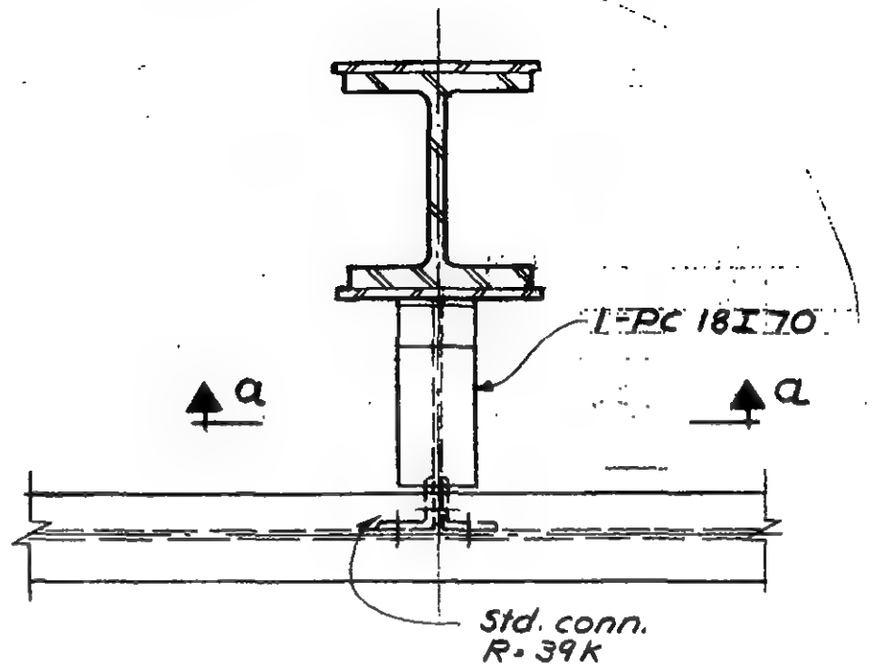

Plan
Detail 204B

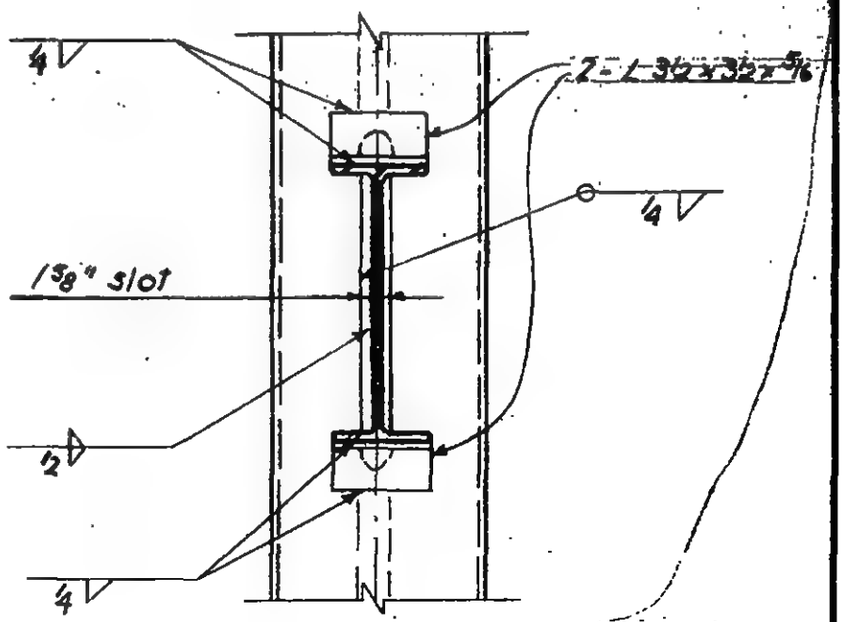

Section a-a

6-AB1-7

LICENSED PROFESSIONAL ENGINEER
LESLIE E. ROBERTSON
No. 34360
UNIVERSITY OF THE STATE OF NEW YORK

SKILLING - HELLE - CHRISTIANSEN - ROBERTSON — Structural & Civil Engineers

PROJECT: THE WORLD TRADE CENTER | TITLE: CONNECTION DETAIL 204 F | DATE: 12-21-67

REVISIONS

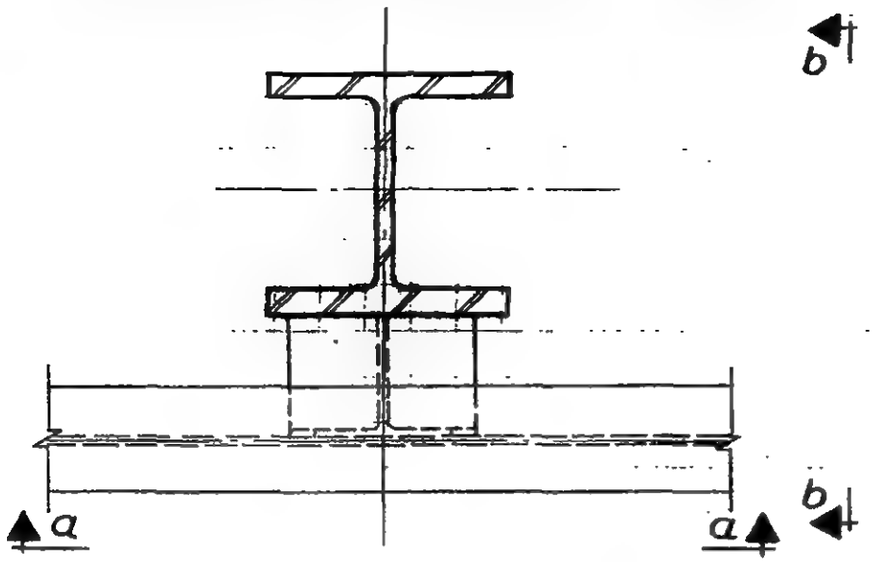

Plan

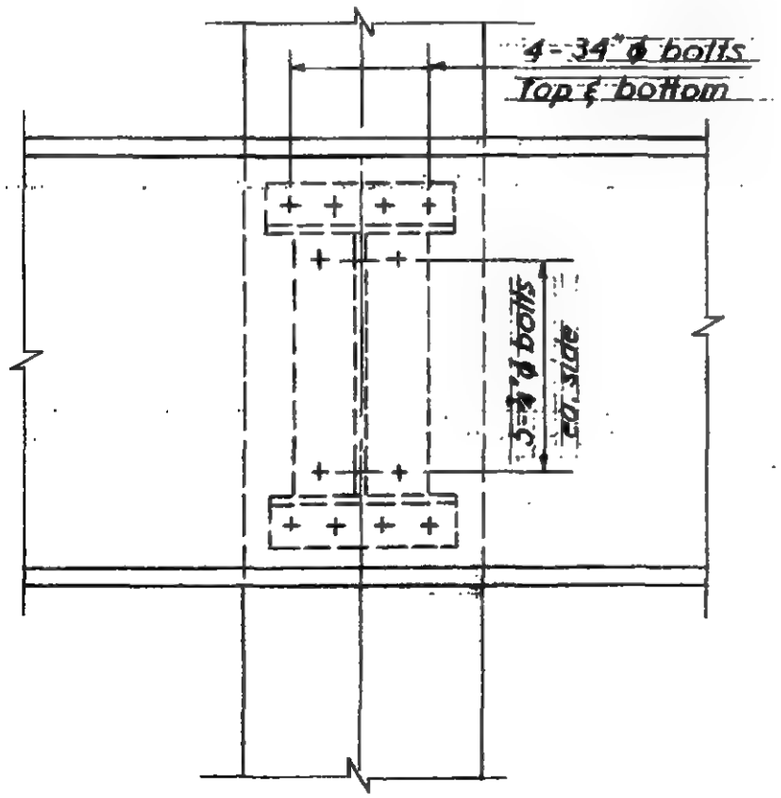

Section a-a

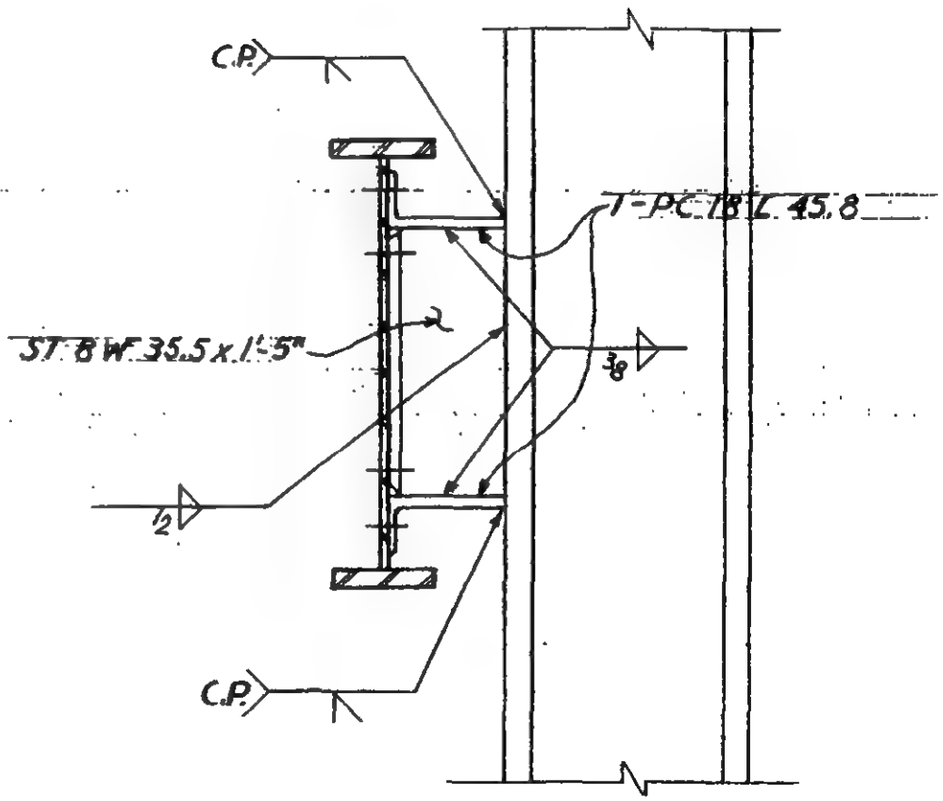

Section b-b

LICENSED PROFESSIONAL ENGINEER
LESLIE E. ROBERTSON
No. 34360
UNIVERSITY OF THE STATE OF NEW YORK

6-AB1-7.1

WORTHINGTON, SKILLING, HELLE & JACKSON — Civil & Structural Engineers

PROJECT: THE WORLD TRADE CENTER | TITLE: CONNECTION DETAIL 205 A, B, C, D, F, G, I, Q | DATE: 5-9-67

REVISIONS
7-28-67
8-5-67
10-2-67

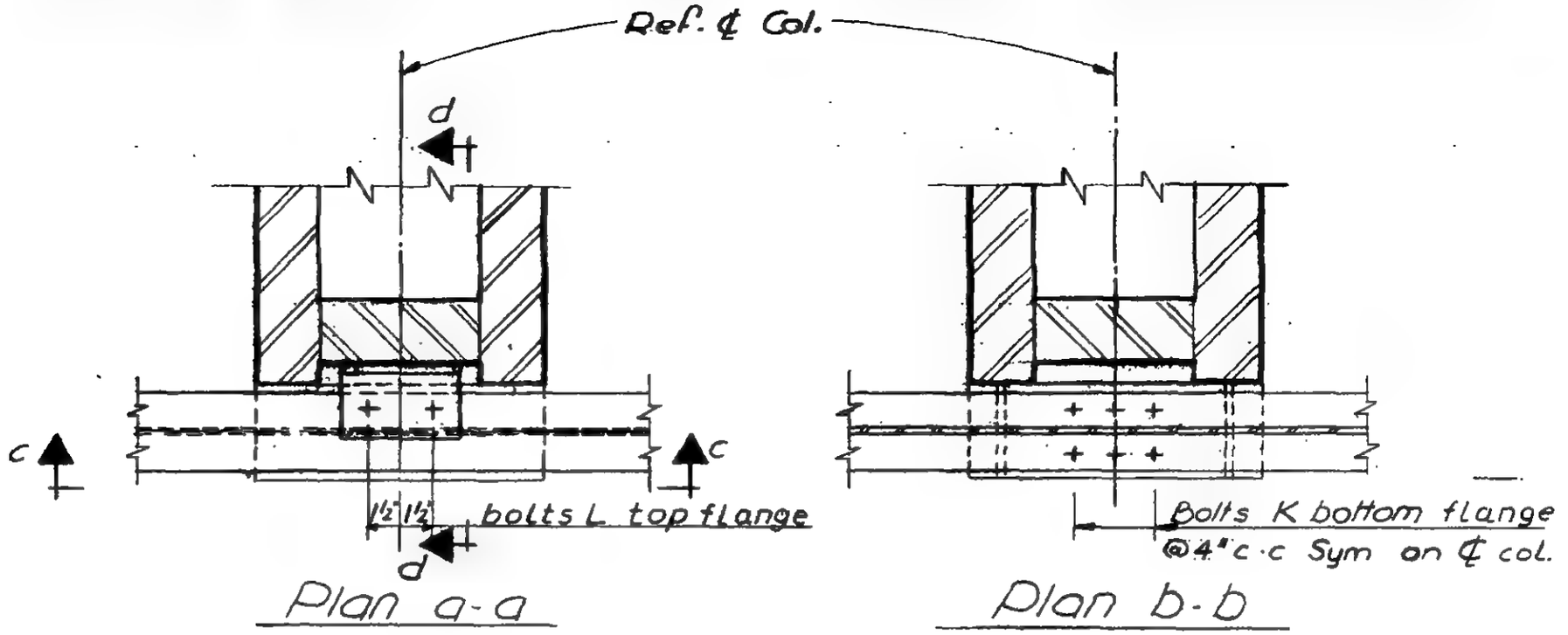

Plan a-a

Plan b-b

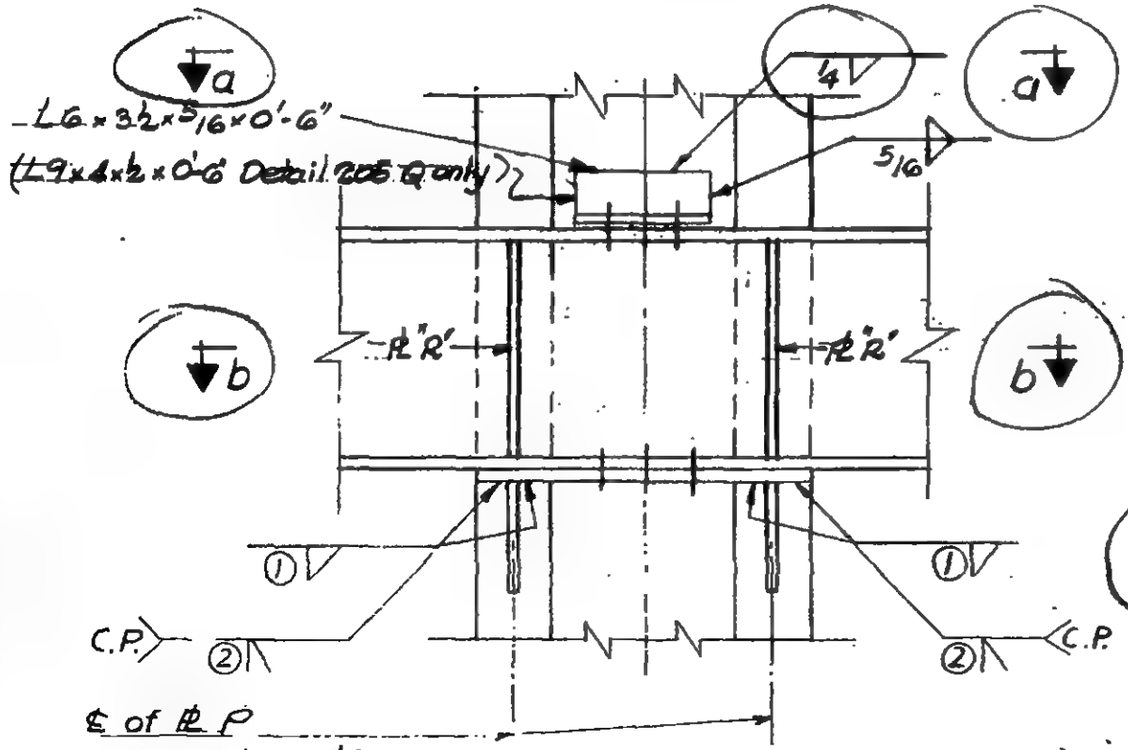

Section c-c

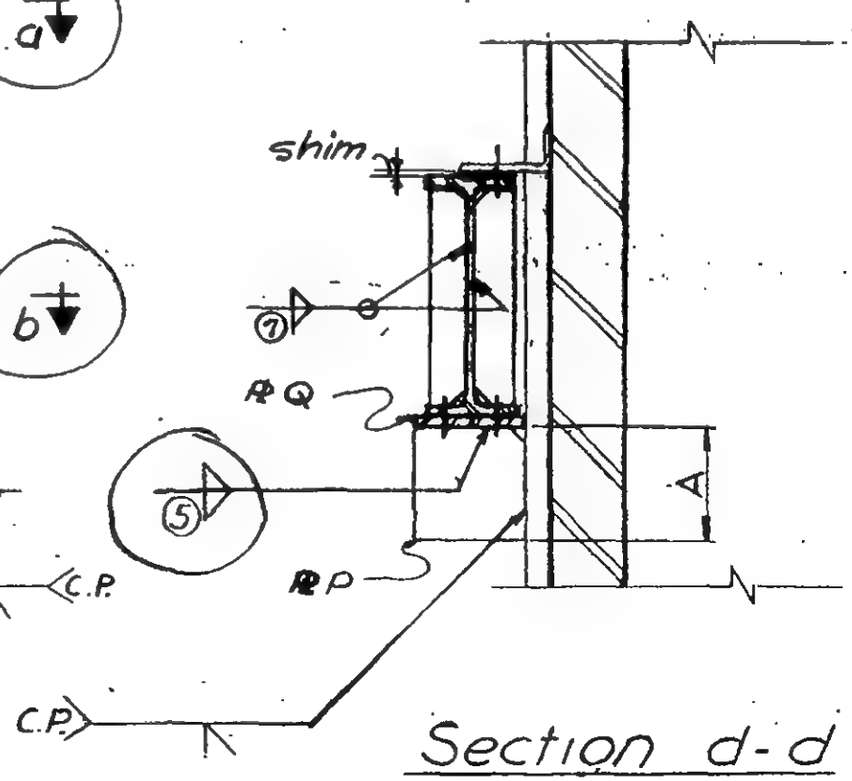

Section d-d

6-AB1-9

WORTHINGTON, SKILLING, HELLE & JACKSON — Civil & Structural Engineers

PROJECT THE WORLD TRADE CENTER | TITLE CONNECTION DETAIL 205 E | DATE 7-26-67

REVISIONS

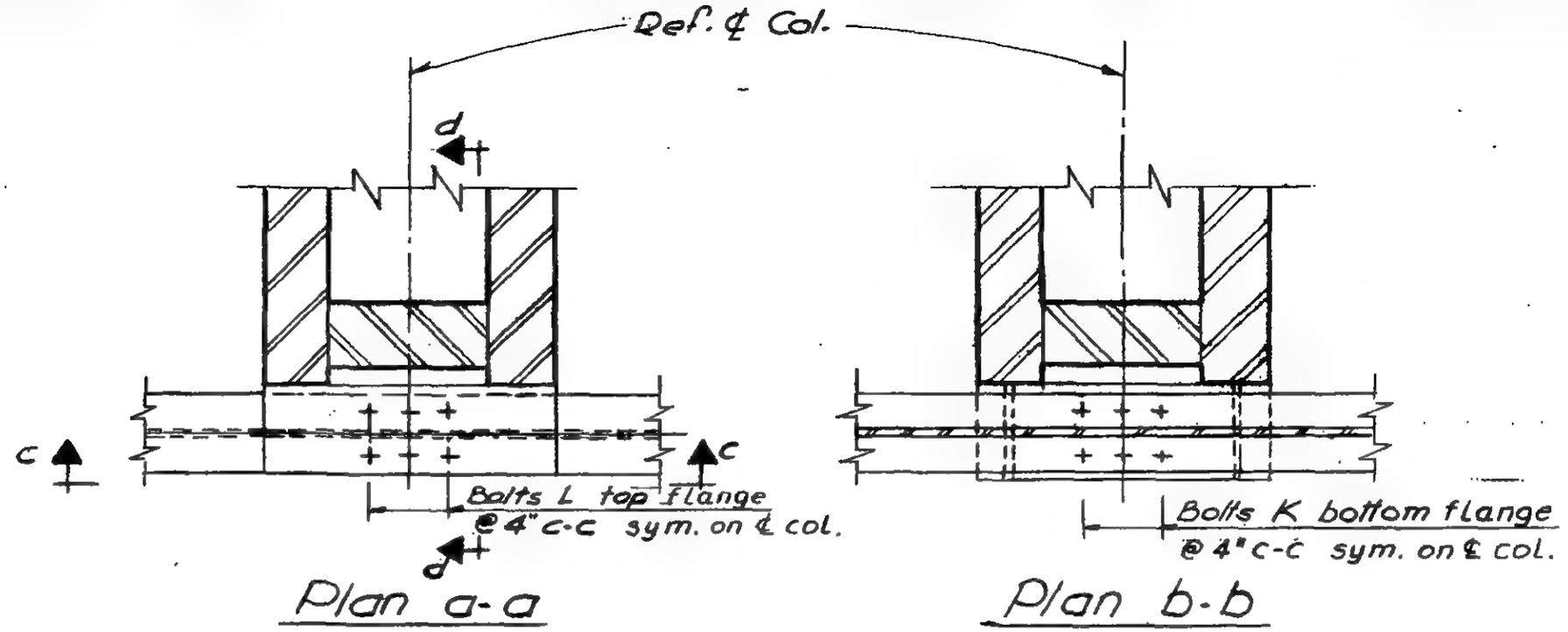

Plan a-a

Plan b-b

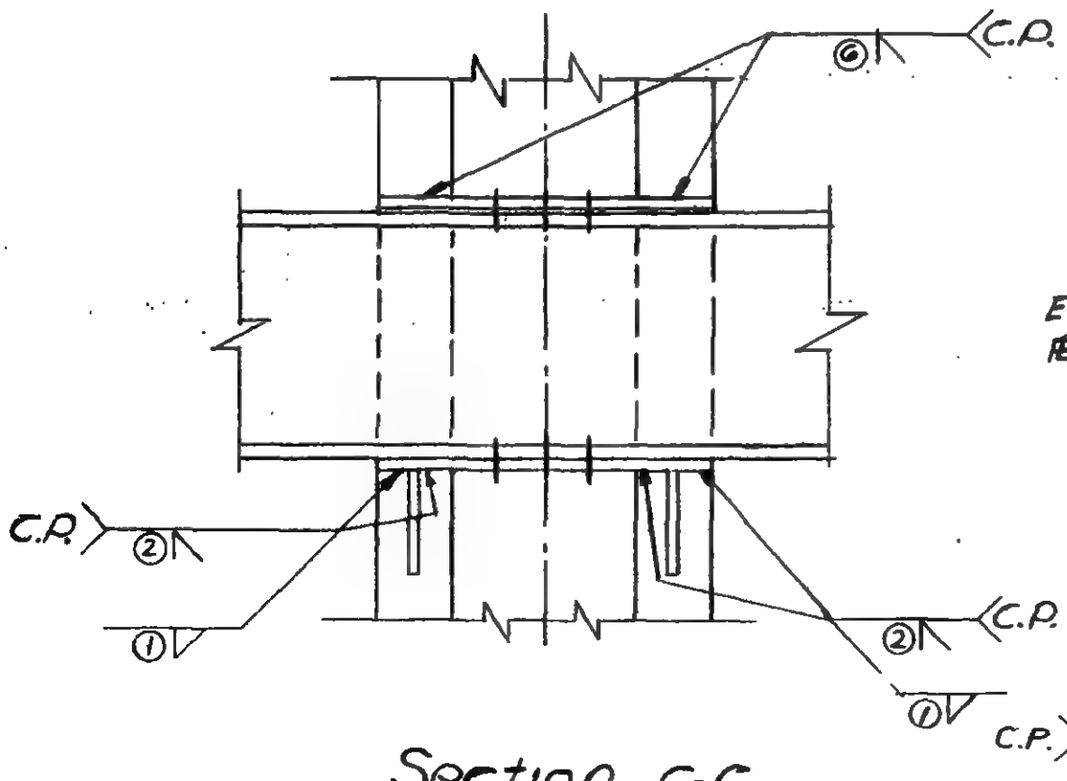

Section c-c

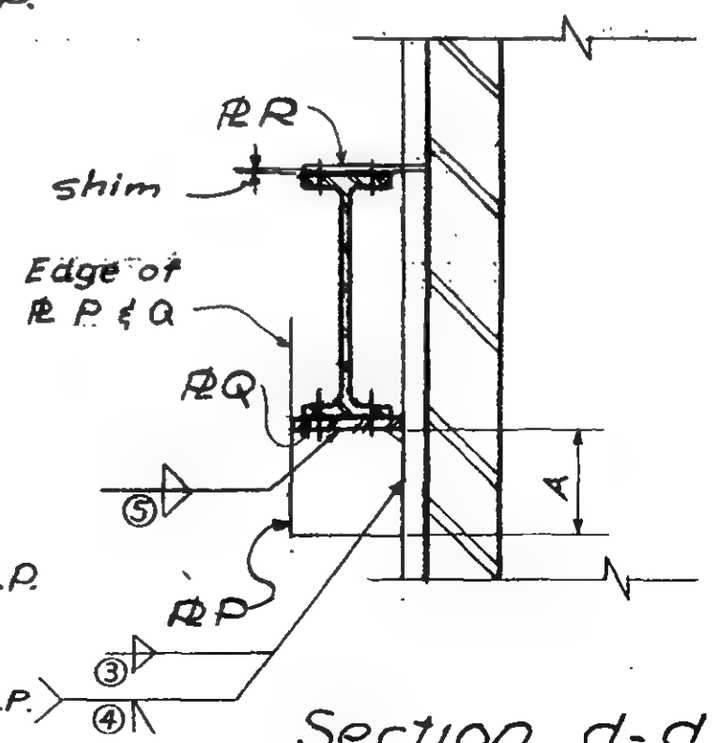

Section d-d

LICENSED PROFESSIONAL ENGINEER
LESLIE E. ROBERTSON
No. 34360
UNIVERSITY OF THE STATE OF NEW YORK

6-AB1-9.1

SKILLING - HELLE - CHRISTIANSEN - ROBERTSON Structural & Civil Engineers

PROJECT THE WORLD TRADE CENTER | TITLE SCHEDULE FOR DETAIL 205 A-F | DATE 7-28-67

REVISIONS

REF. DWGS.	6-ABI-9	6-ABI-9	6-ABI-9	6-ABI-9	6-ABI-9.1	6-ABI-9
	205 A	205 B	205 C	205 D	205 E	205 F
PLATES						
P	1"	1"	1/2"	1/2"	1"	5/8"
Q	1"	1"	1/2"	1"	1"	1"
R	—	—	—	—	1"	—
DIMENSIONS						
A	1'-4"	1'-4"	1'-4"	1'-4"	1'-4"	1'-0"
BOLTS						
K	4 - 3/4" ϕ	6 - 7/8" ϕ	4 - 3/4" ϕ	6 - 7/8" ϕ	6 - 7/8" ϕ	6 - 3/4" ϕ
L	2 - 3/4" ϕ	2 - 3/4" ϕ	2 - 3/4" ϕ	2 - 3/4" ϕ	6 - 7/8" ϕ	2 - 3/4" ϕ
WELDS						
①	—	—	—	—	—	—
②	C.P.	C.P.	C.P.	C.P.	C.P.	C.P.
③	1/2	1/2	—	—	1/2	—
④	—	—	C.P.	C.P.	—	C.P.
⑤	3/8	3/8	5/16	5/16	3/8	5/16
⑥	—	—	—	—	C.P.	—

6-ABI-9.2

SKILLING - HELLE - CHRISTIANSEN - ROBERTSON Structural & Civil Engineers

PROJECT: THE WORLD TRADE CENTER | TITLE: SCHEDULE FOR DETAIL 205 G, I, H, J, K, L | DATE: 7-28-67

REVISIONS
8-5-67
10-2-67
10-31-67

REF. DWGS.	6-AB1-9	6-AB1-9	6-AB1-9.4	6-AB1-9.5	6-AB1-9.5	6-AB1-9.5
	205G	205I	205H	205J	205K	205L
PLATES						
P	1"	½"	½"	¾"	⅞"	1"
Q	1¼"	½"	1"	¾"	⅞"	1"
R	—	—	1"	½"	½"	½"
S	—	—	—	—	⅝"	⅝"
DIMENSIONS						
A	1'-4"	1'-2"	1'-2"	1'-3"	1'-6"	1'-7"
B	—	—	—	—	0'-9" min	0'-9" min
BOLTS						
K	6 - ¾" ϕ	4 - ¾" ϕ	12 - 1" ϕ	12 - ⅞" ϕ	12 - ⅞" ϕ	12 - ⅞" ϕ
L	2 - ¾" ϕ	2 - ¾" ϕ	12 - 1" ϕ	—	4 - ⅞" ϕ	4 - ⅞" ϕ
WELDS						
①	—	—	C.P.	5/16	5/16	5/16
②	C.P.	C.P.	C.P.	—	⅜"	⅜"
③	—	—	—	—	—	—
④	C.P.	C.P.	—	—	—	—
⑤	⅜	¼	—	—	—	—
⑥	—	—	—	—	—	—

LICENSED PROFESSIONAL ENGINEER
LESLIE E. ROBERTSON
No. 34360
UNIVERSITY OF THE STATE OF NEW YORK

6-AB1-9.3

REVISIONS

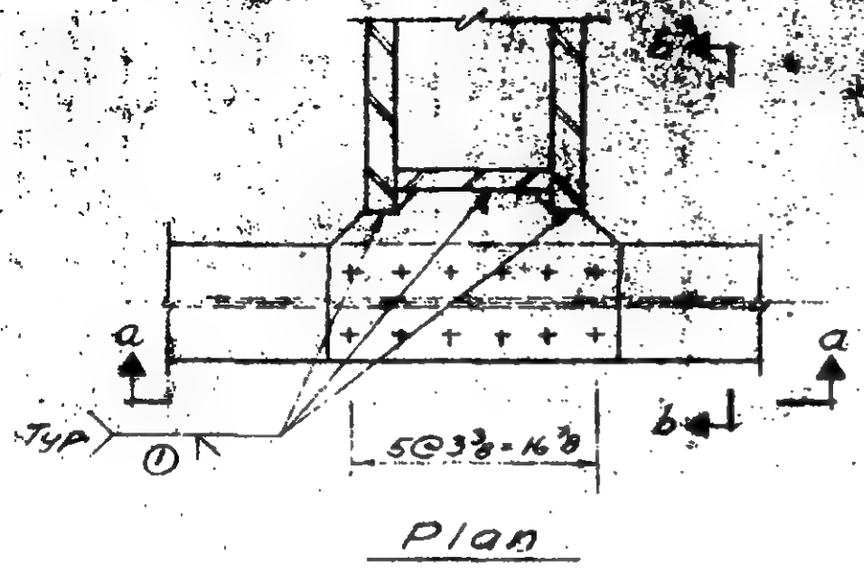

Plan

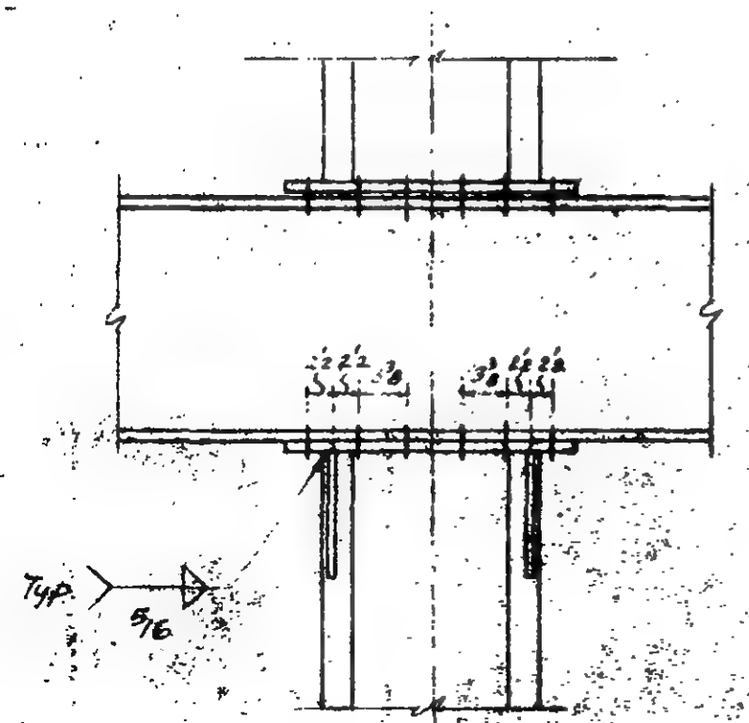

Section a-a

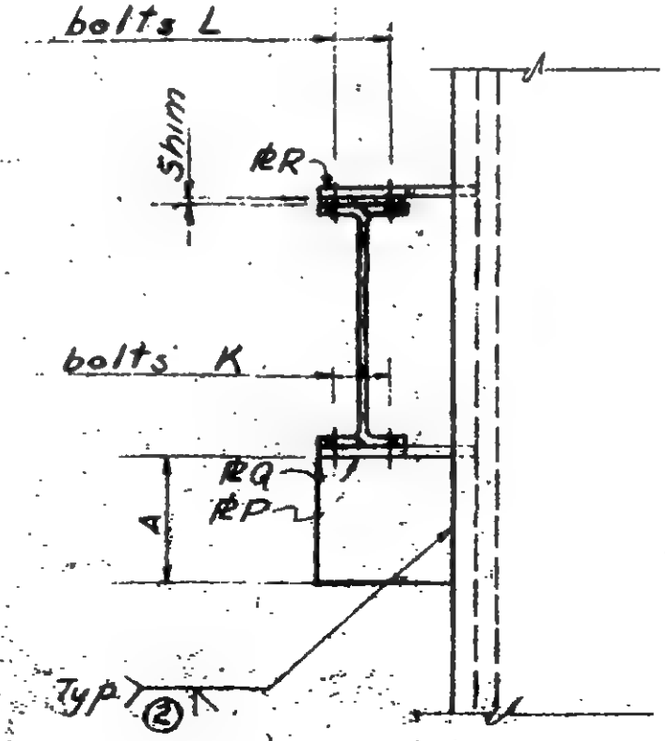

Section b-b

LICENSED PROFESSIONAL ENGINEER
LESLIE E. ROBERTSON
No. 34360
STATE OF NEW YORK

6-AB1-9.4

SKILLING - HELLE - CHRISTIANSEN - ROBERTSON Structural & Civil Engineers

PROJECT THE WORLD TRADE CENTER | TITLE CONNECTION DETAIL 205 J, K, L, | DATE 10-2-67

REVISIONS

10-31-67

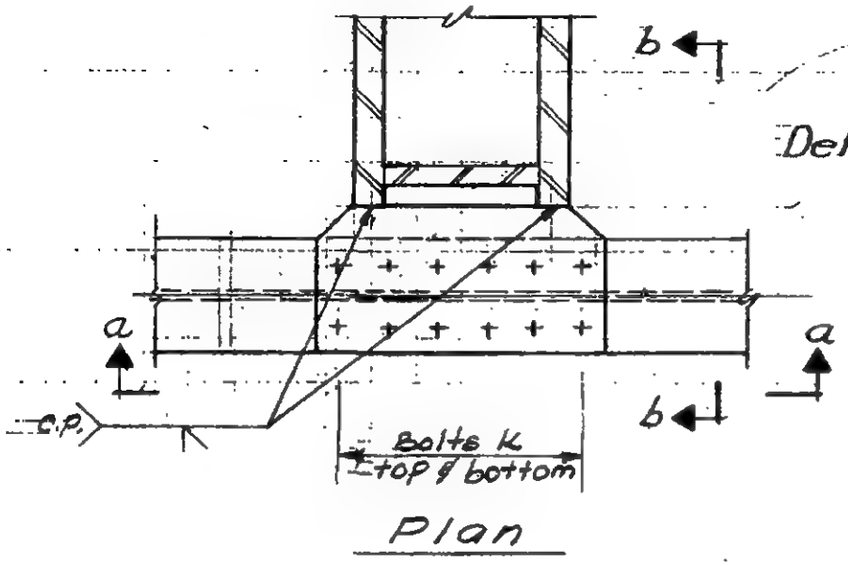

Plan

Details K & L: See G-AB5-96 for bracing elevation

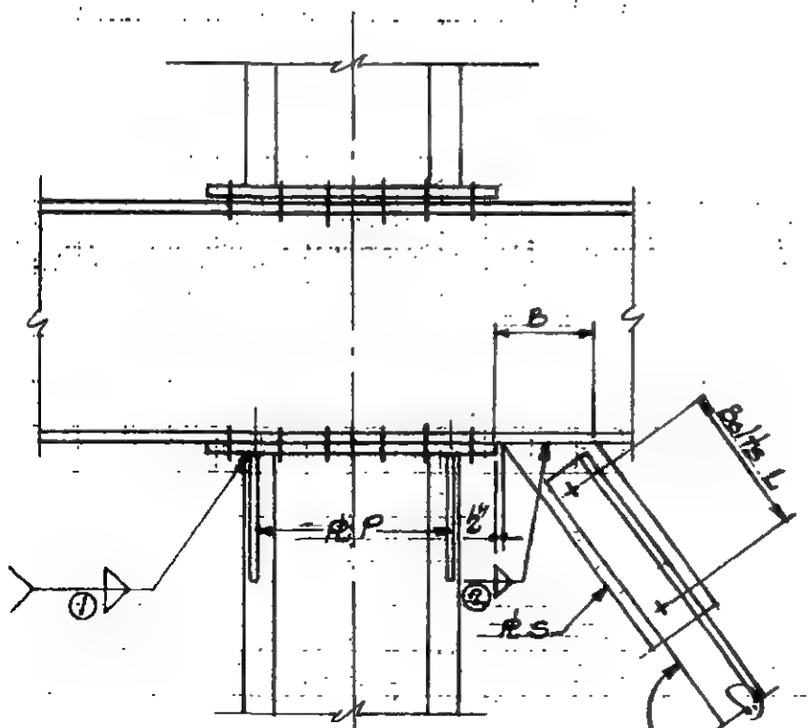

Section a-a

2-TF Diagonal bracing details K & L only

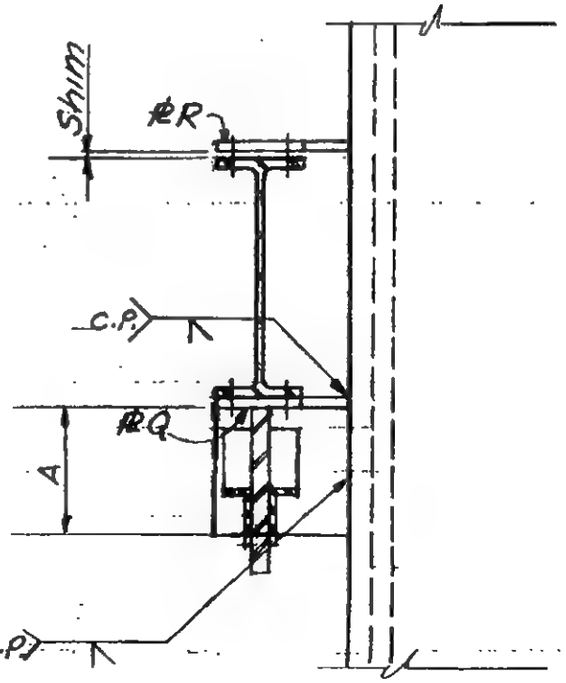

Section b-b

LICENSED PROFESSIONAL ENGINEER
LESLIE E. ROBERTSON
No. 34360
UNIVERSITY OF THE STATE OF NEW YORK

6-AB1-9.5

SKILLING - HELLE - CHRISTIANSEN - ROBERTSON — Structural & Civil Engineers

PROJECT THE WORLD TRADE CENTER | TITLE CONNECTION DETAIL 205 M. N. P | DATE 10-2-67

REVISIONS

10-31-67

Details 205 M & P: See G-AB5-96 or G-AB5-99 for bracing elevation.

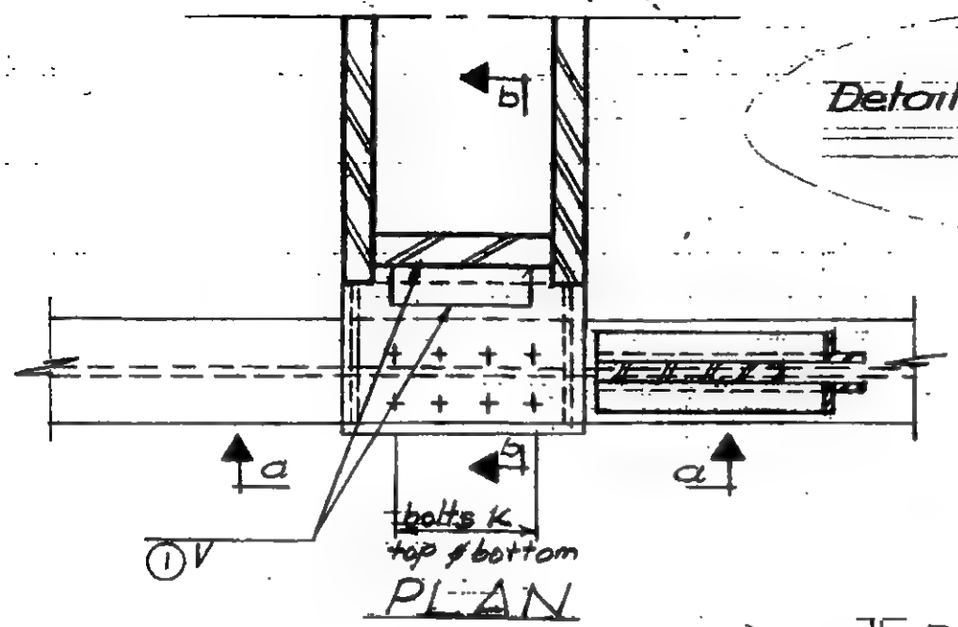

Section a-a

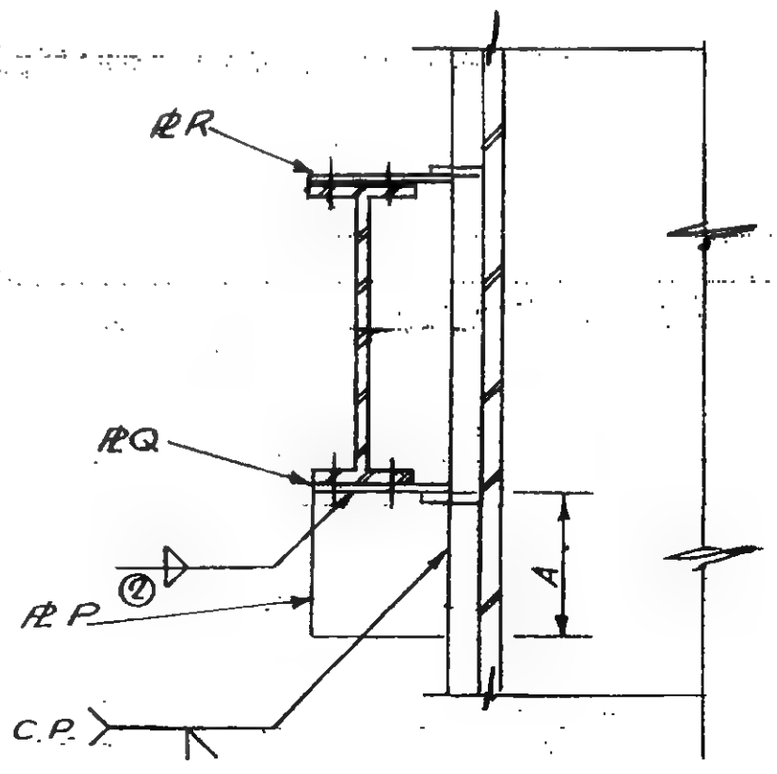

Section b-b

LICENSED PROFESSIONAL ENGINEER
LESLIE E. ROBERTSON
No. 24360
STATE OF NEW YORK

G-AB1-9.6

SKILLING - HELLE - CHRISTIANSEN - ROBERTSON — Structural & Civil Engineers

PROJECT THE WORLD TRADE CENTER | TITLE SCHEDULE FOR DETAIL 205 M,N,P,Q,R,S,T | DATE 10-2-67

REVISIONS

10-31-67

REF. DWG.	G-AB1-9.6	G-AB1-9.6	G-AB1-9.6	G-AB1-9	G-AB1-9.8	G-AB1-9.8
	205M	205N	205P	205Q	205R,S	205T
PLATES						
P	3/4"	5/8"	5/8	1	7/16	1
Q	1"	1"	7/8	1	7/16	1
R	1"	1"	7/8	5/8	—	—
S	5/8"	—	5/8	—	—	—
T	3/4"	3/4"	5/8	—	—	—
BOLTS						
K	8-1 1/8"ϕ A490	8-1 1/8"ϕ A490	8-1"ϕ A490	6-3/4" ϕ	3-3/4" ϕ	4-3/4" ϕ
L	4-7/8"ϕ	—	4-7/8"ϕ	2-3/4" ϕ	2-3/4" ϕ	2-3/4"ϕ
DIMENSIONS						
A	1'-2"	1'-0"	1'-0"	1'-8"	0'-9"	1'-10"
B	0'-9" min	—	0'-9" min	—	—	—
WELDS						
(1)	5/8	5/8	1/2	—	—	—
(2)	3/8	3/8	3/8	C.P.	C.P.	C.P.
(3)	3/8	—	3/8	—	—	—
(4)	—	—	—	C.P.	C.P.	C.P.
(5)	—	—	—	5/16	5/16	5/16
(6)	—	—	—	3/8"	—	—
(7)	—	—	—	3/8"	—	—

LICENSED PROFESSIONAL ENGINEER — LESLIE E. ROBERTSON — No. 34360 — UNIVERSITY OF THE STATE OF NEW YORK

6-AB1-9.7

SKILLING - HELLE - CHRISTIANSEN - ROBERTSON — Structural & Civil Engineers

PROJECT: THE WORLD TRADE CENTER | TITLE: CONNECTION DETAIL 205 R, S, T, U, V, W, X, Y | DATE: 10-3-67

REVISIONS

10-31-67

Detail 205X See G-AB5-96 for bracing elevation
Detail 205 V & Y See G-AB5-96 or G-AB5-99 for bracing elevation

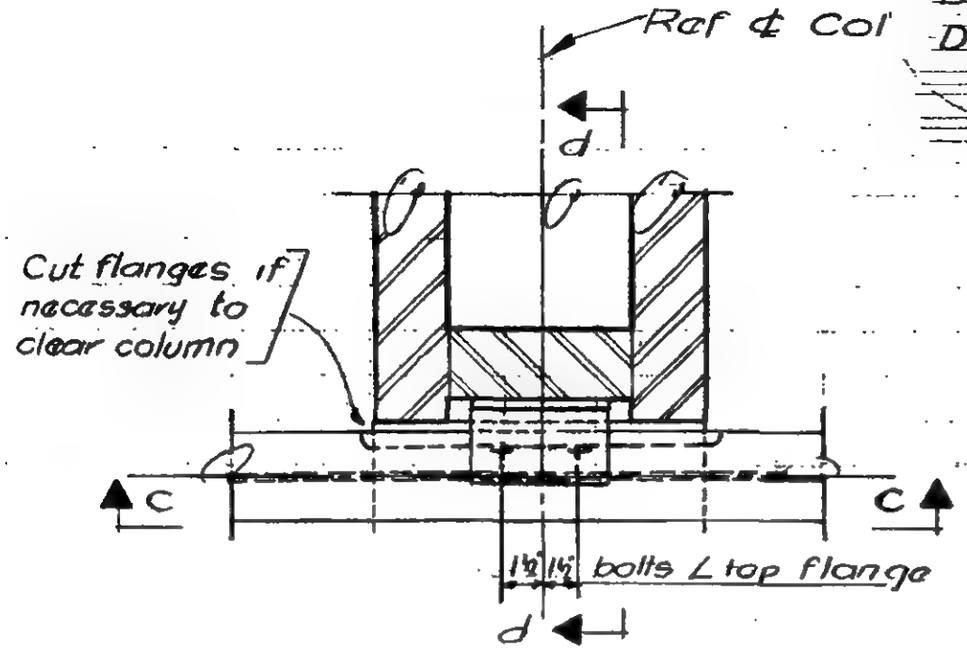

Plan a-a

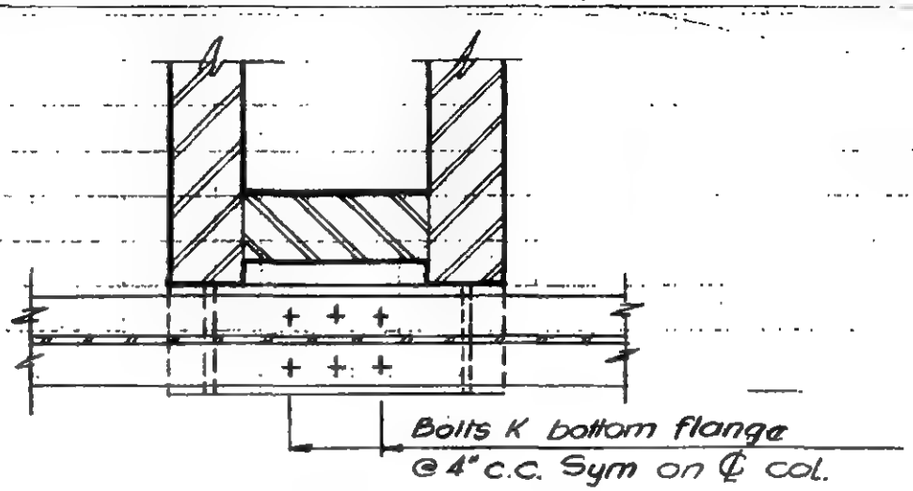

Plan b-b

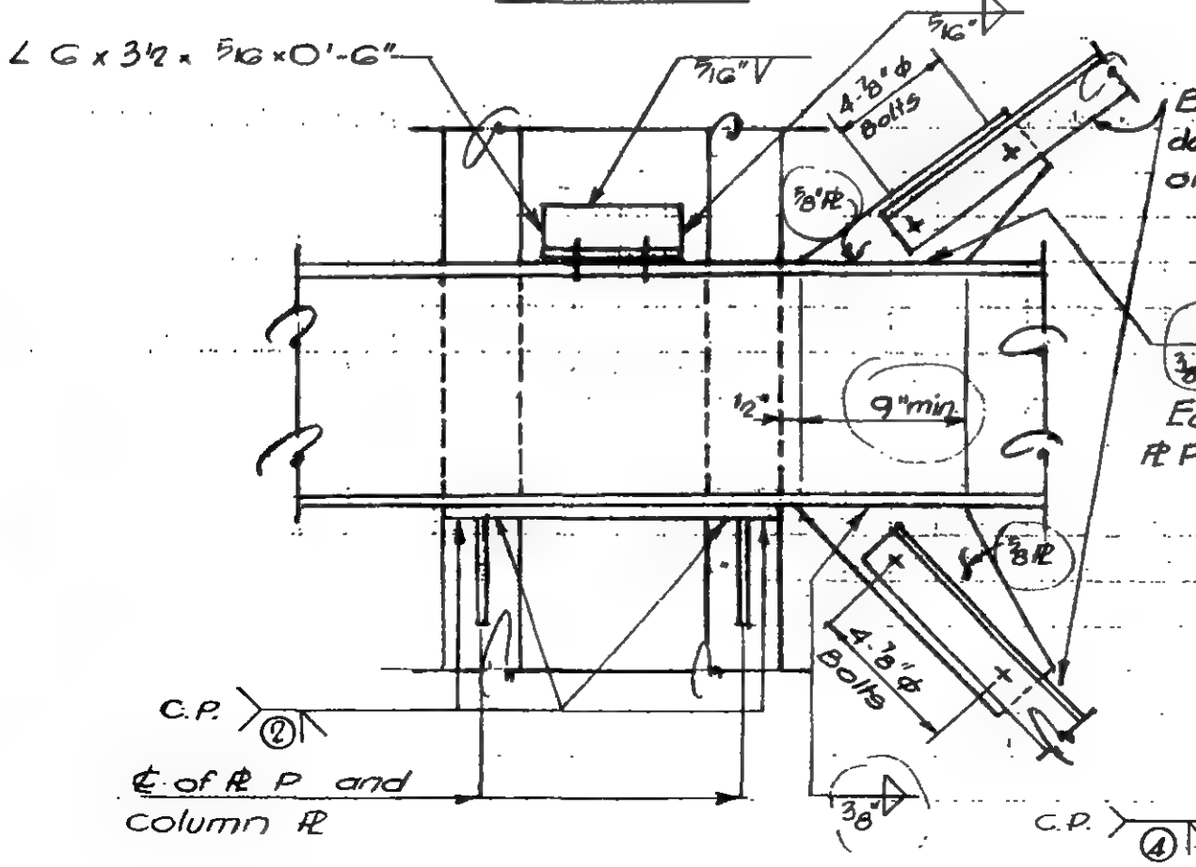

Section c-c

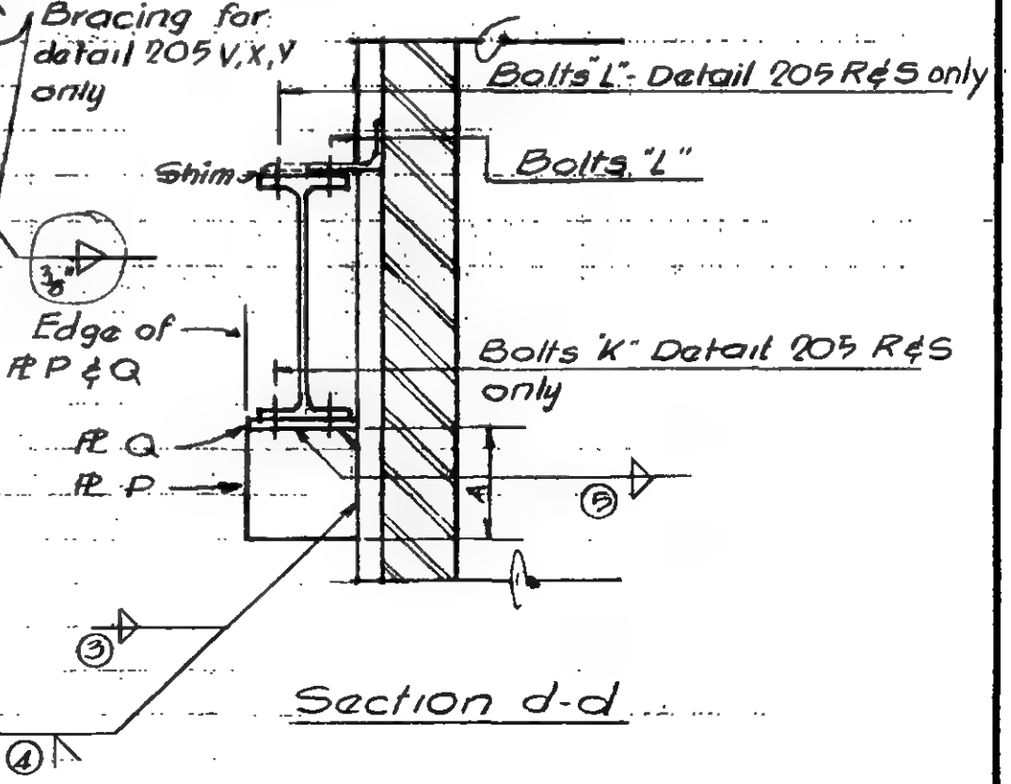

Section d-d

G-AB1-9.8

SKILLING - HELLE - CHRISTIANSEN - ROBERTSON Structural & Civil Engineers

PROJECT THE WORLD TRADE CENTER | TITLE SCHEDULE FOR DETAIL 205 U, V, W, X, Y | DATE 10-2-67

REVISIONS

REF. DWG.	G-AB1-9.8	G-AB1-9.8	G-AB1-9.8	G-AB1-9.8	G-AB1-9.8	
	205 U	205 V	205 W	205 X	205 Y	
PLATE						
P	3/4"	5/8"	5/8"	3/4"	1 1/4"	
Q	3/4"	5/8"	5/8"	3/4"	5/8"	
R	—	—	—	—	—	
BOLTS						
K	4-3/4" ϕ	4-3/4" ϕ	4-3/4" ϕ	4-3/4" ϕ	4-3/4" ϕ	
L	2-3/4" ϕ	2-3/4" ϕ	2-3/4" ϕ	2-3/4" ϕ	2-3/4" ϕ	
DIMENSION						
A	1'-3"	1'-2"	1'-0"	1'-3"	1'-9"	
WELDS						
①	—	—	—	—	—	
②	C.P.	C.P.	C.P.	C.P.	C.P.	
③	—	—	—	—	—	
④	C.P.	C.P.	C.P.	C.P.	C.P.	
⑤	5/16"	5/16"	5/16"	5/16"	5/16"	

LICENSED PROFESSIONAL ENGINEER
LESLIE E. ROBERTSON
No. 34360
UNIVERSITY OF THE STATE OF NEW YORK

6-AB1-9.8

SKILLING - HELLE - CHRISTIANSEN - ROBERTSON Structural & Civil Engineers

PROJECT THE WORLD TRADE CENTER | TITLE CONNECTION DETAIL 205Z | DATE 2-9-68

REVISIONS

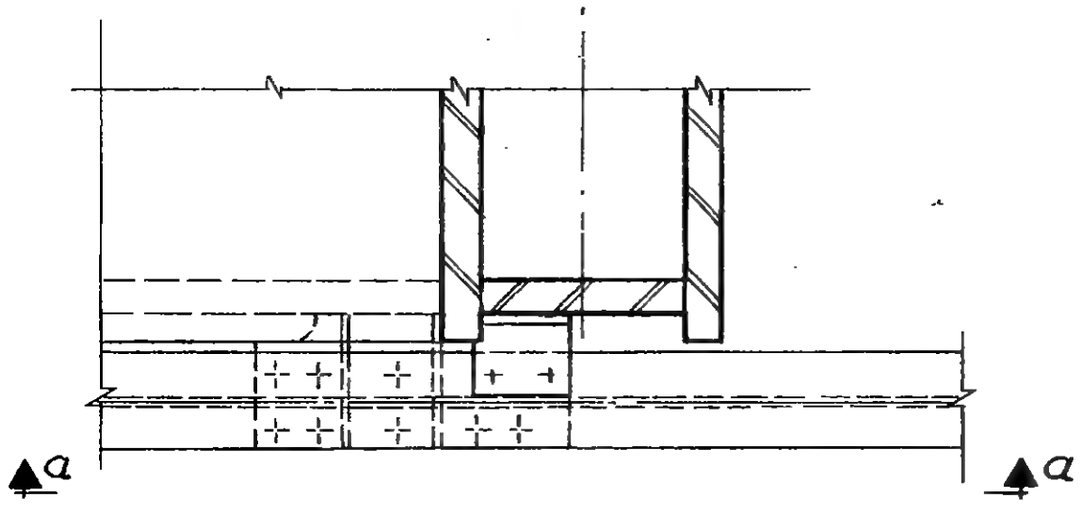

Plan

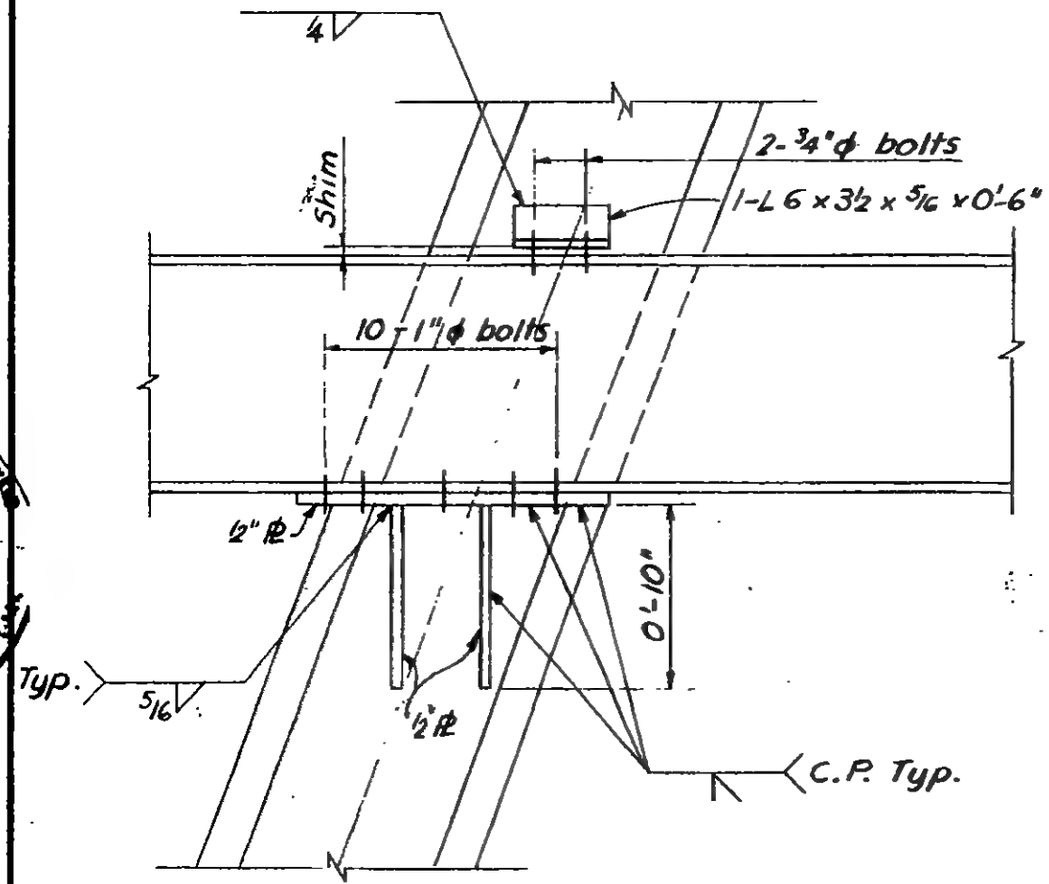

Section a-a

LICENSED PROFESSIONAL ENGINEER
LESLIE E. ROBERTSON
No. 34360
UNIVERSITY OF THE STATE OF N.Y.

6-AB1-9.10

WORTHINGTON, SKILLING, HELLE & JACKSON — Civil & Structural Engineers

PROJECT	TITLE	DATE
THE WORLD TRADE CENTER	CONNECTION DETAIL #206 A #B	5-1-67

REVISIONS

7-28-67
9-15-67
11-14-67

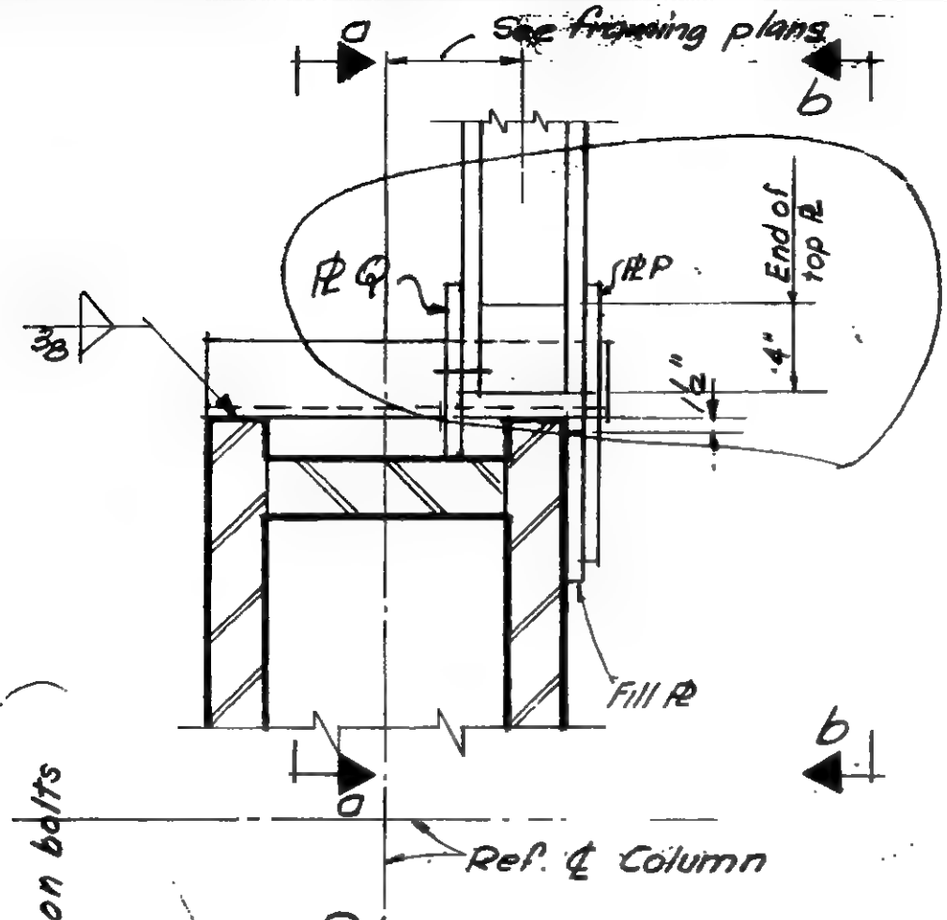

Plan

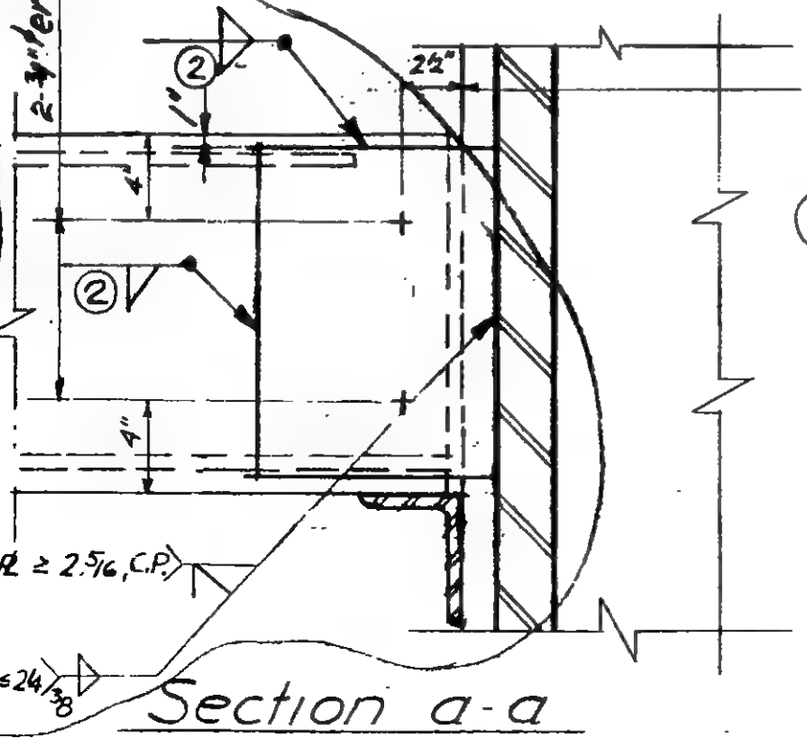

Section a-a

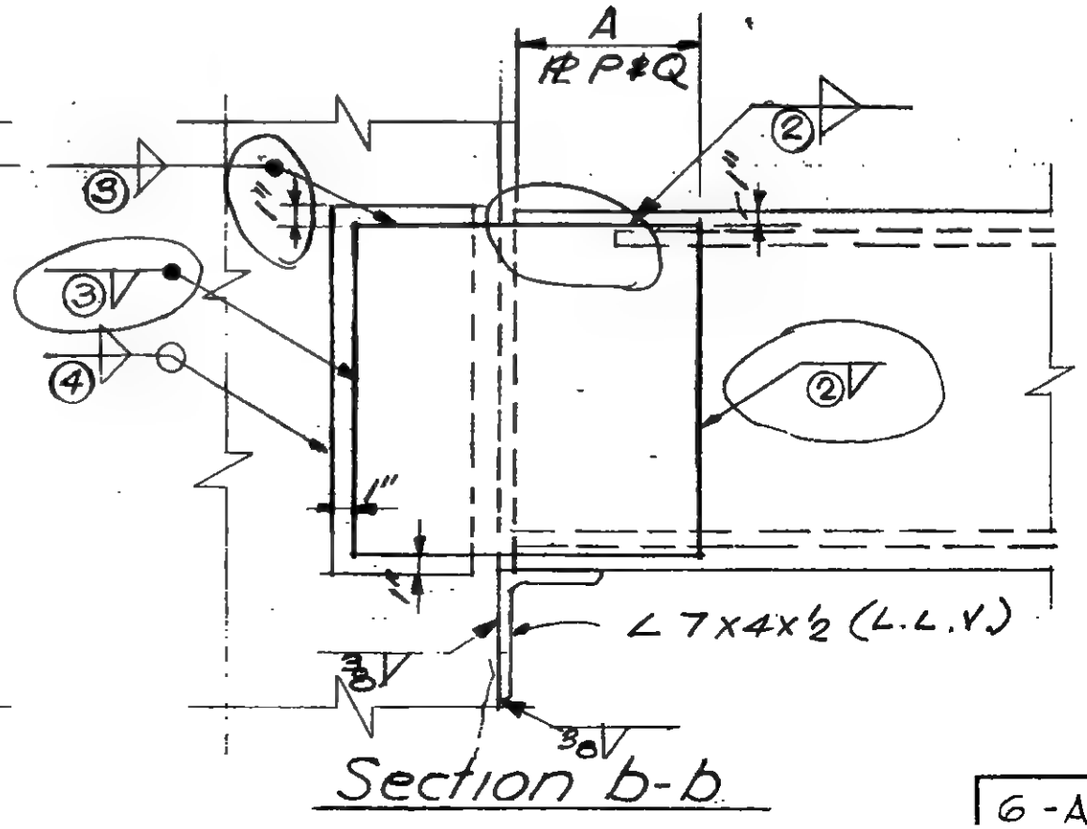

Section b-b

LICENSED PROFESSIONAL ENGINEER
LESLIE E. ROBERTSON
No. 3450
UNIVERSITY OF THE STATE OF NEW YORK

6-AB1-11

SKILLING - HELLE - CHRISTIANSEN - ROBERTSON Structural & Civil Engineers

PROJECT THE WORLD TRADE CENTER | TITLE SCHEDULE FOR DETAIL 206 A & B | DATE 7-28-67

REVISIONS

	206 A	206 B				
PLATES						
P	14" × ¾" × 1'-7"	14" × 1" × 2'-0				
Q	14" × ¾"	14" × 1"				
DIMENSIONS						
A	0'-8"	0'-10"				
WELDS						
②	½	¾				
③	½	¾				
④	½	½				

6-AB1-11.1

WORTHINGTON, SKILLING, HELLE & JACKSON — Civil & Structural Engineers

PROJECT: THE WORLD TRADE CENTER | TITLE: CONNECTION DETAIL 207A | DATE: 5-22-67

REVISIONS

10-2-67

1-24-68

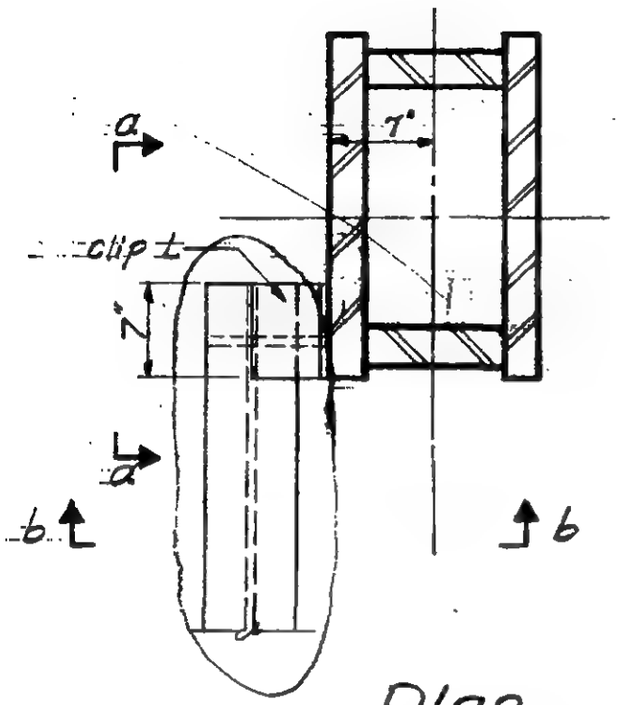

Plan

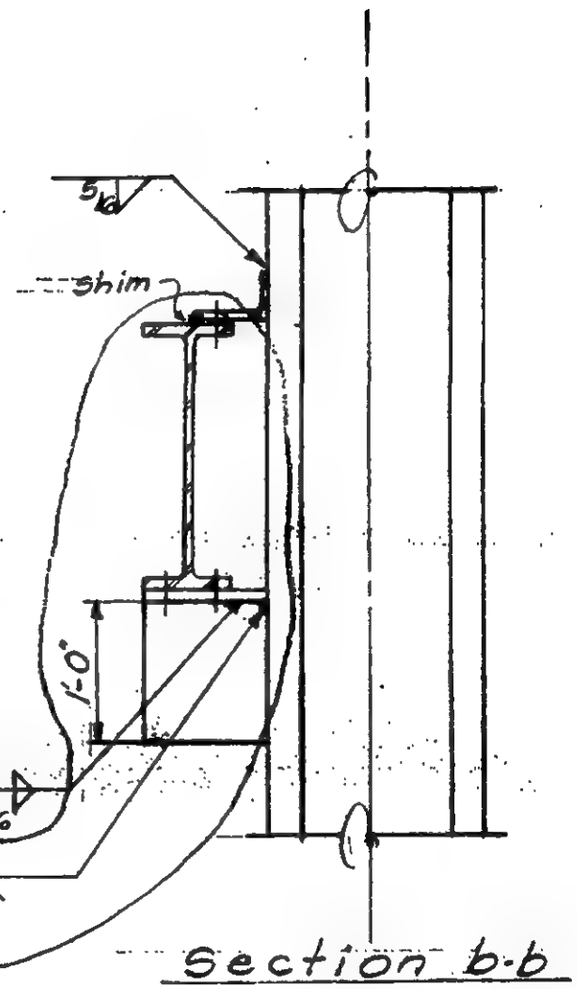

Section b-b

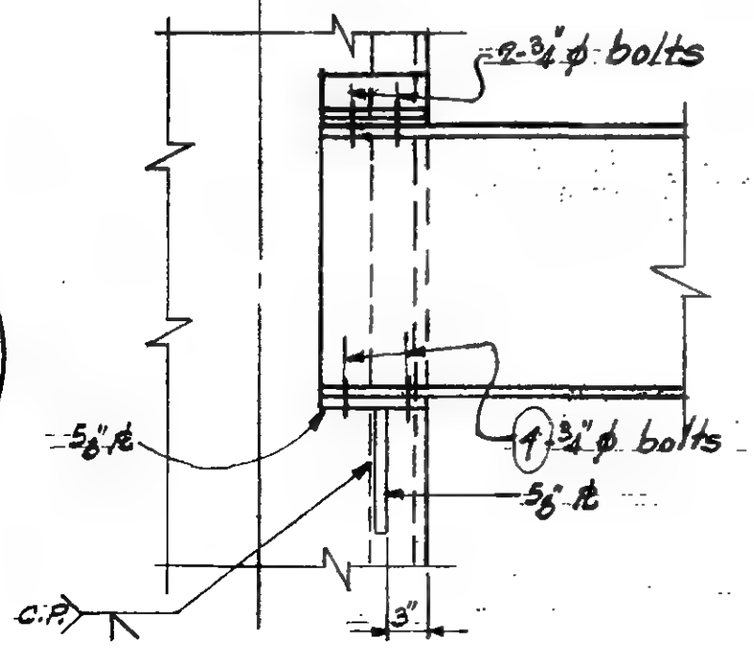

Section a-a

LICENSED PROFESSIONAL ENGINEER
LESLIE E. ROBERTSON
No. 34360
UNIVERSITY OF THE STATE OF NEW

6-AB1-12

SKILLING - HELLE - CHRISTIANSEN - ROBERTSON Structural & Civil Engineers

PROJECT THE WORLD TRADE CENTER | TITLE SCHEDULE FOR DETAIL 208 A - F | DATE 6 - 30 - 67

REVISIONS

7 - 28 - 67

8 - 5 - 67

9 - 15 - 67

REF. DWGS.	6 - ABI - 13	6 - ABI - 13.2	6 - ABI - 13.3	6 - ABI - 13.2	6 - ABI - 13.2	6 - ABI - 13.2
	208A	208B	208C	208 D	208 E	208 F
PLATES						
P	7" x 1¼"	6" x ½"	6" x 9/16"	6" x ¾"	6" x 5/8"	6" x ½"
Q	17" x 14" x 3'-4"	½"	9/16"	¾"	¾"	½"
R	17" x 14" x 3'-4"	½"	9/16"	¾"	¾"	½"
S	—	—	13/16"	—	—	—
ANGLES						
T	3½ x 3½ x ⅜ x 0'-8½"	4 x 3½ x ¼	4 x 3½ x ¼	4 x 3½ x ¼	4 x 3½ x 5/16	4 x 3½ x 5/16
DIMENSIONS						
B	1'-4"	1'-0"	1'-0"	1'-0"	1'-0"	1'-0"
BOLTS						
J	3 - ⅞" ϕ (A 325)	2 - ¾" ϕ	3 - ¾" ϕ	3 - ¾" ϕ	3 - ¾" ϕ	3 - ¾" ϕ
K	6 - ¾" ϕ (A 325)	6 - ¾" ϕ	8 - 1" ϕ	8 - 1" ϕ	8 - 1" ϕ	6 - ¾" ϕ
L	10 - 1⅛" ϕ (A325)	6 - ¾" ϕ	8 - 1" ϕ	8 - 1" ϕ	8 - 1" ϕ	6 - ¾" ϕ
M	4 - 1⅛" ϕ (A325)	2 - ¾" ϕ	2 - 1" ϕ	2 - 1" ϕ	2 - 1" ϕ	2 - ¾" ϕ
N	4 - 1⅛" ϕ (A325)	4 - ¾" ϕ	6 - 1" ϕ	6 - 1" ϕ	4 - 1" ϕ	4 - ¾" ϕ
WELDS						
①	5/8	3/8	3/8	3/8	3/8	—
②	5/8	5/16	5/16	3/8	3/8	5/16
③	—	—	3/8	—	—	—
④	—	—	¾	—	—	—
⑤	—	—	¾	—	—	—
⑥	—	—	—	—	—	C. P.

6 - ABI - 13.1

WORTHINGTON, SKILLING, HELLE & JACKSON, Civil & Structural Engineers

PROJECT THE WORLD TRADE CENTER | TITLE CONNECTION DETAIL 208 A | DATE 5-9-67

REVISIONS

6-30-67

7-28-67

9-15-67

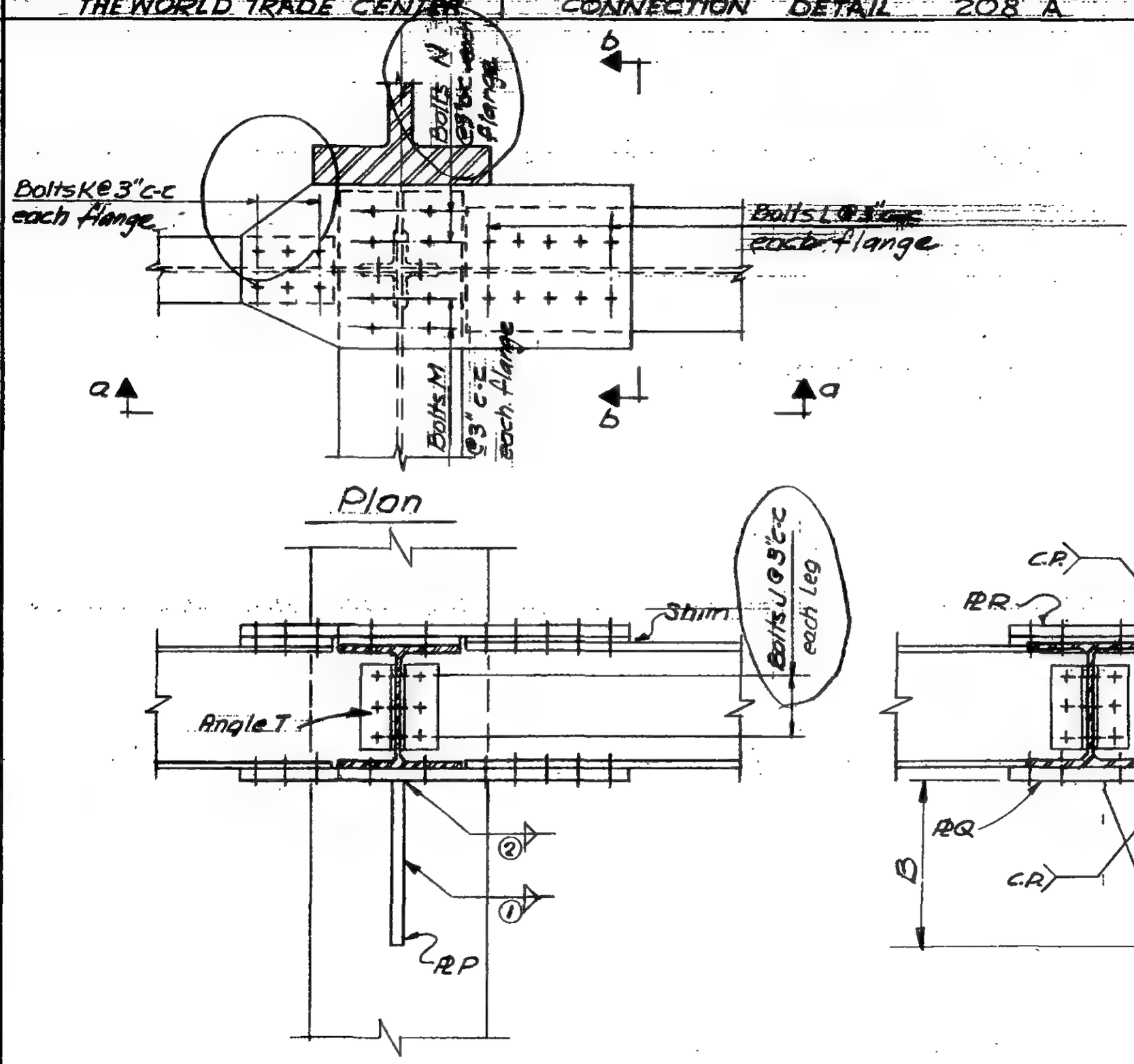

LICENSED PROFESSIONAL ENGINEER LESLIE E. ROBERTSON No. 34360 UNIVERSITY OF THE STATE OF NEW YORK

6-AB1-13

WORTHINGTON, SKILLING, HELLE & JACKSON — Civil & Structural Engineers

PROJECT: THE WORLD TRADE CENTER | TITLE: CONNECTION DETAIL 208 B, D, E, F, G & H | DATE: 7-26-67

REVISIONS
9-15-67

6-ABI-13.1 for Sched 208 D-F
6-ABI-13.4 for Sched. 208 G & H

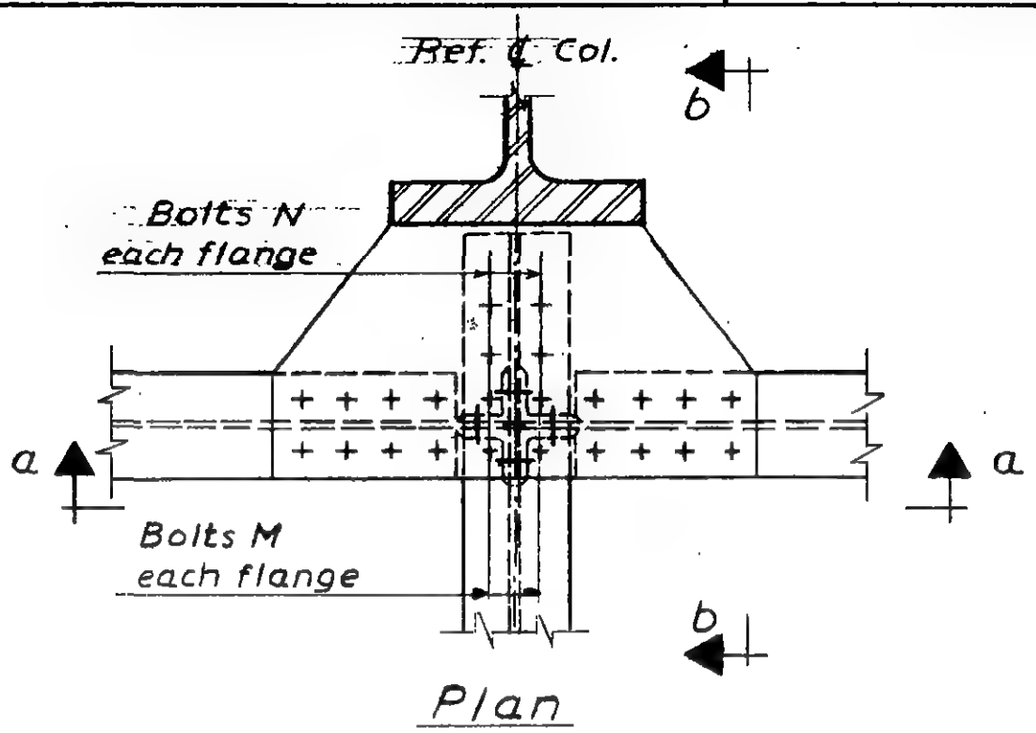

Plan

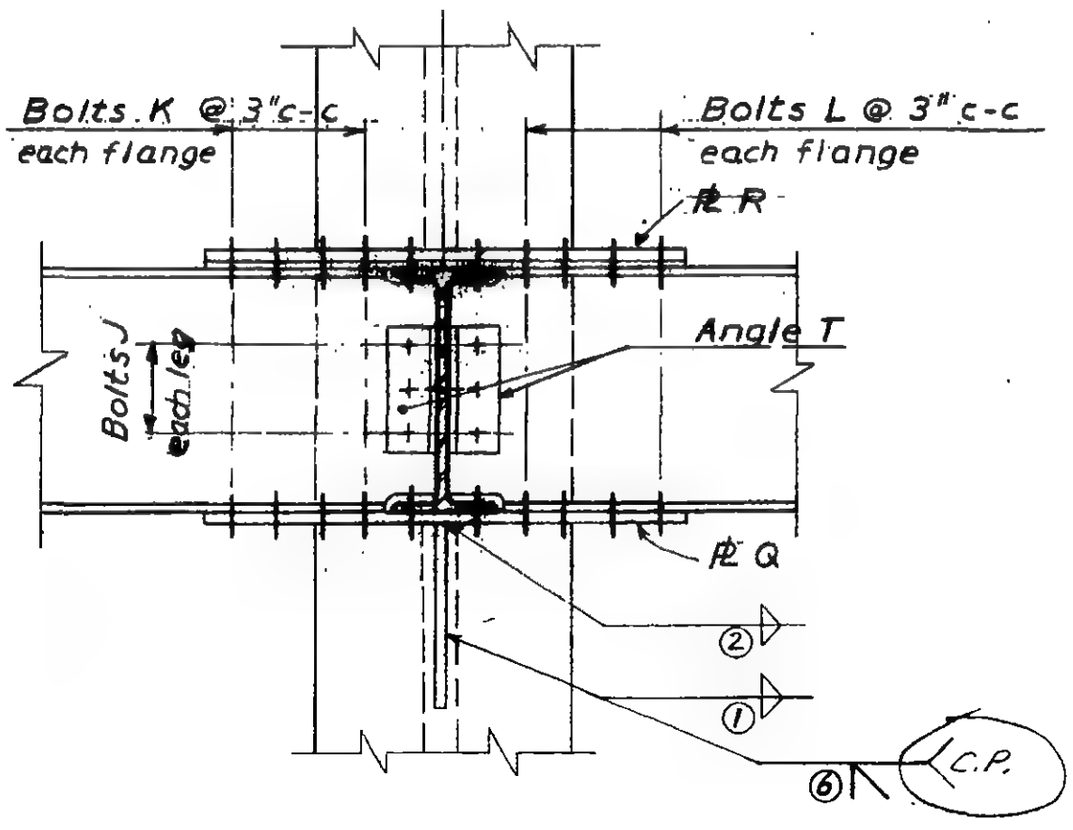

Section a-a

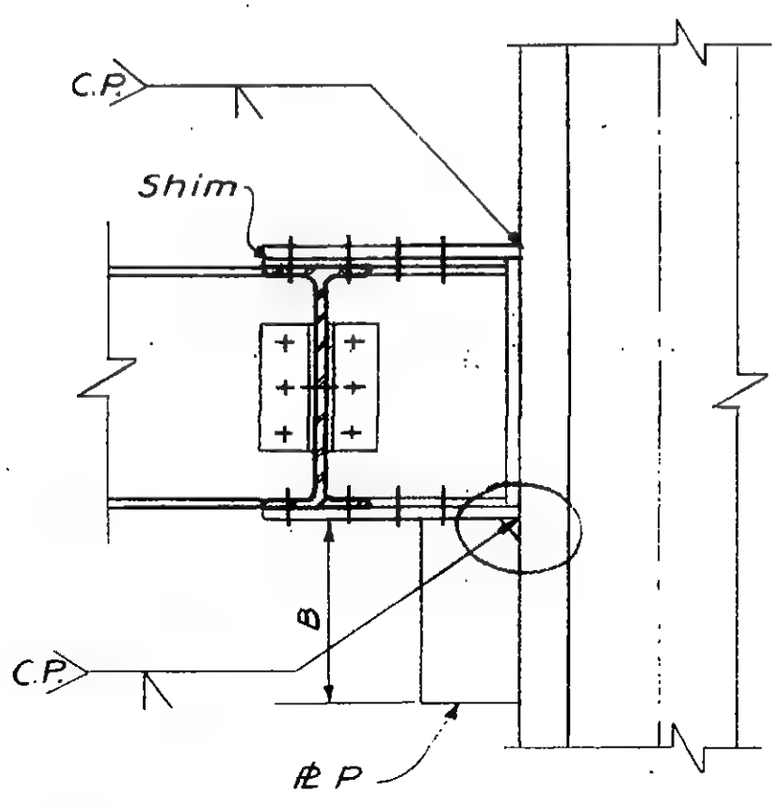

Section b-b

LICENSED PROFESSIONAL ENGINEER
LESLIE E. ROBERTSON
No. 34360
UNIVERSITY OF THE STATE OF NEW YORK

6-ABI-13.2

WORTHINGTON, SKILLING, HELLE & JACKSON — Civil & Structural Engineers

PROJECT	TITLE	DATE
THE WORLD TRADE CENTER	CONNECTION DETAIL 20B C	5-9-67

REVISIONS

7-28-67
9-15-67

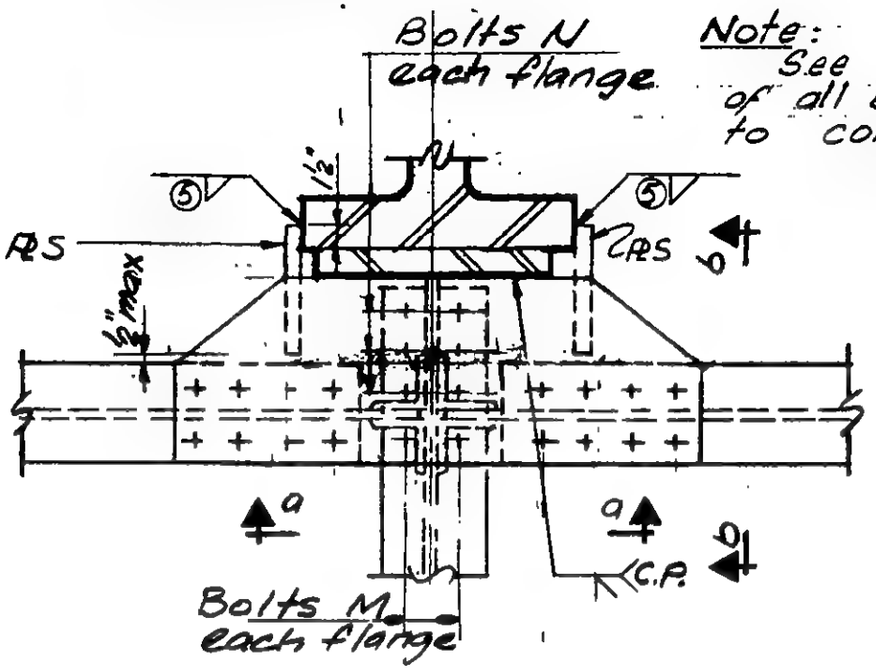

Plan

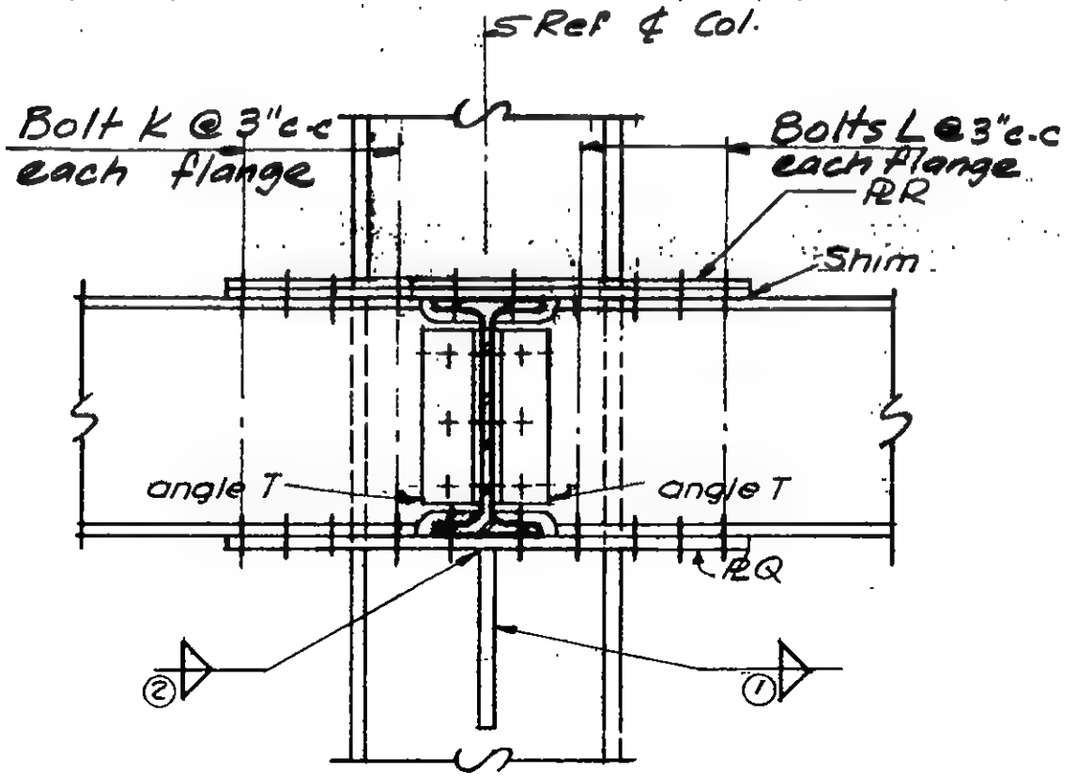

Section a-a

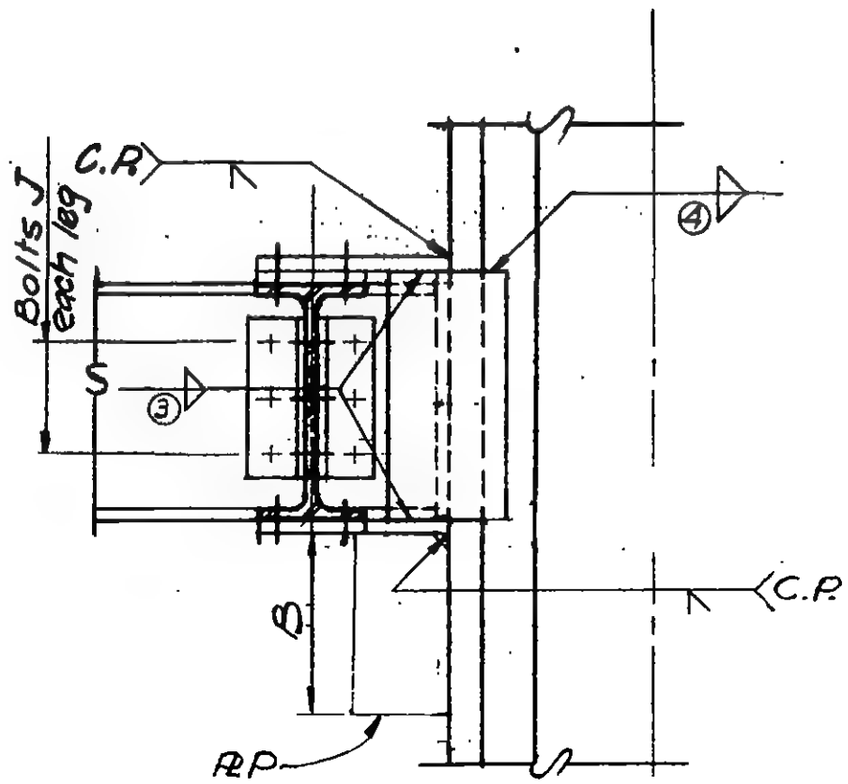

Section b-b

6-AB1-13.3

LICENSED PROFESSIONAL ENGINEER
LESLIE E. ROBERTSON
No. 34360
UNIVERSITY OF THE STATE OF NEW YORK

SKILLING - HELLE - CHRISTIANSEN - ROBERTSON Structural & Civil Engineers

PROJECT: THE WORLD TRADE CENTER | TITLE: SCHEDULE FOR DETAIL 208 G & H & I | DATE: 8-5-67

REVISIONS
9-15-67
10-5-67

Ref. Dwgs.	6-AB1-13.2	6-AB1-13.2	6-AB1-13.5			
	208G	208H	208I			
PLATES						
P	6"x1/2"	6x5/8"	7x5/8"			
Q	1/2"	5/8"	5/8"			
R	1/2"	5/8"	3/4"			
S	—	—	—			
ANGLES						
T	4x3 1/2x5/16	4x3 1/2x5/16	—			
BOLTS						
J	3-3/4"ϕ	4-3/4"ϕ	—			
K	6-3/4"ϕ	6-3/4"ϕ	8-1 1/8 ϕ			
L	6-3/4"ϕ	6-3/4"ϕ	—			
M	2-3/4"ϕ	2-3/4"ϕ	4-3/4"ϕ			
N	4-3/4"ϕ	4-3/4"ϕ	4-3/4"ϕ			
DIMENSION						
B	1'-0"	1'-0"	1'-0"			
WELDS						
①	—	—	5/16			
②	5/16	5/16	—			
③	—	—	—			
④	—	—	—			
⑤	—	—	—			
⑥	C.P.	C.P.	—			

6-AB1-13.4

SKILLING - HELLE - CHRISTIANSEN - ROBERTSON — Structural & Civil Engineers

PROJECT	TITLE	DATE
THE WORLD TRADE CENTER	CONNECTION DETAIL 208 I	10-5-67

REVISIONS

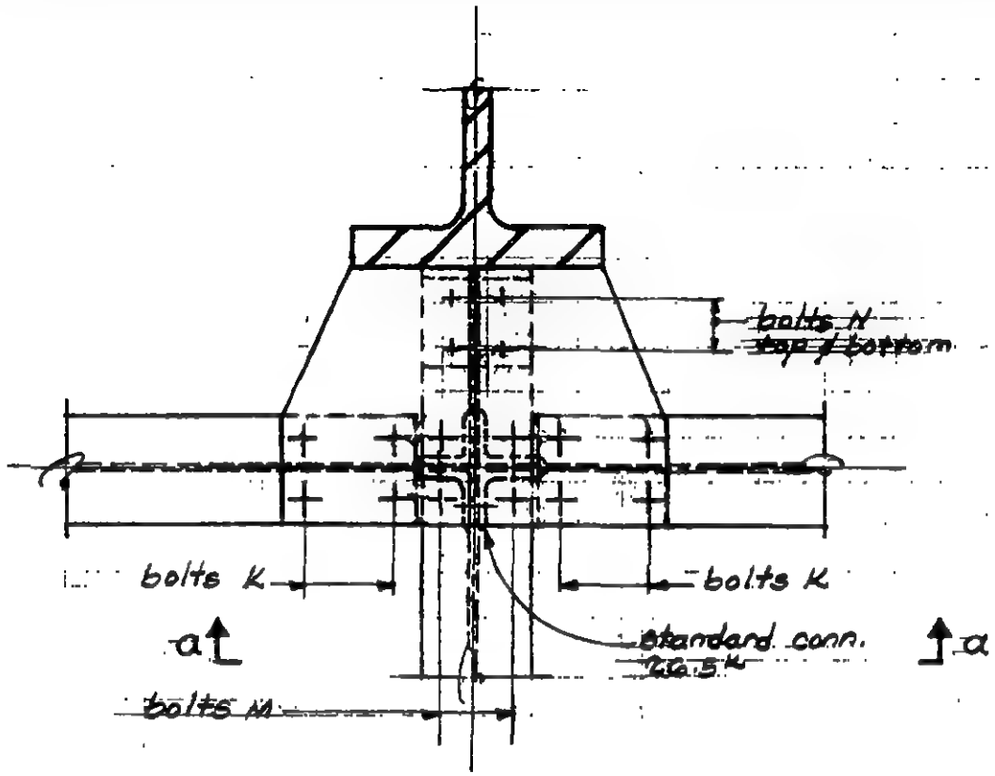

PLAN

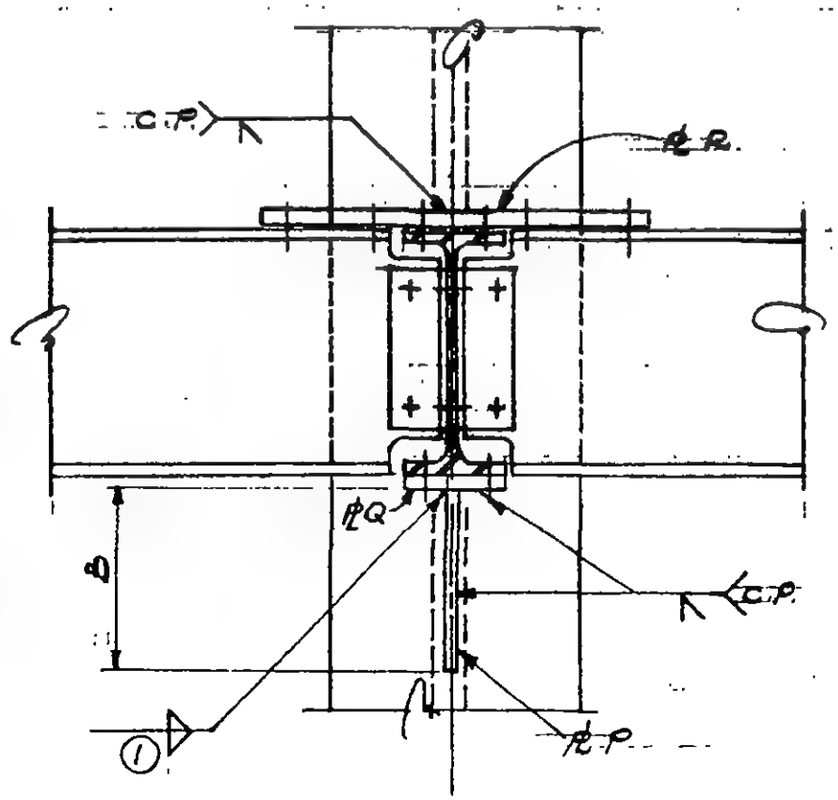

Section a-a

LESLIE E. ROBERTSON
No. 34360
UNIVERSITY OF THE STATE OF NEW YORK

6-AB1-13.5

SKILLING - HELLE - CHRISTIANSEN - ROBERTSON — Structural & Civil Engineers

PROJECT THE WORLD TRADE CENTER | TITLE CONNECTION DETAIL 209(A) | DATE 5-22-67

REVISIONS

10-7-67

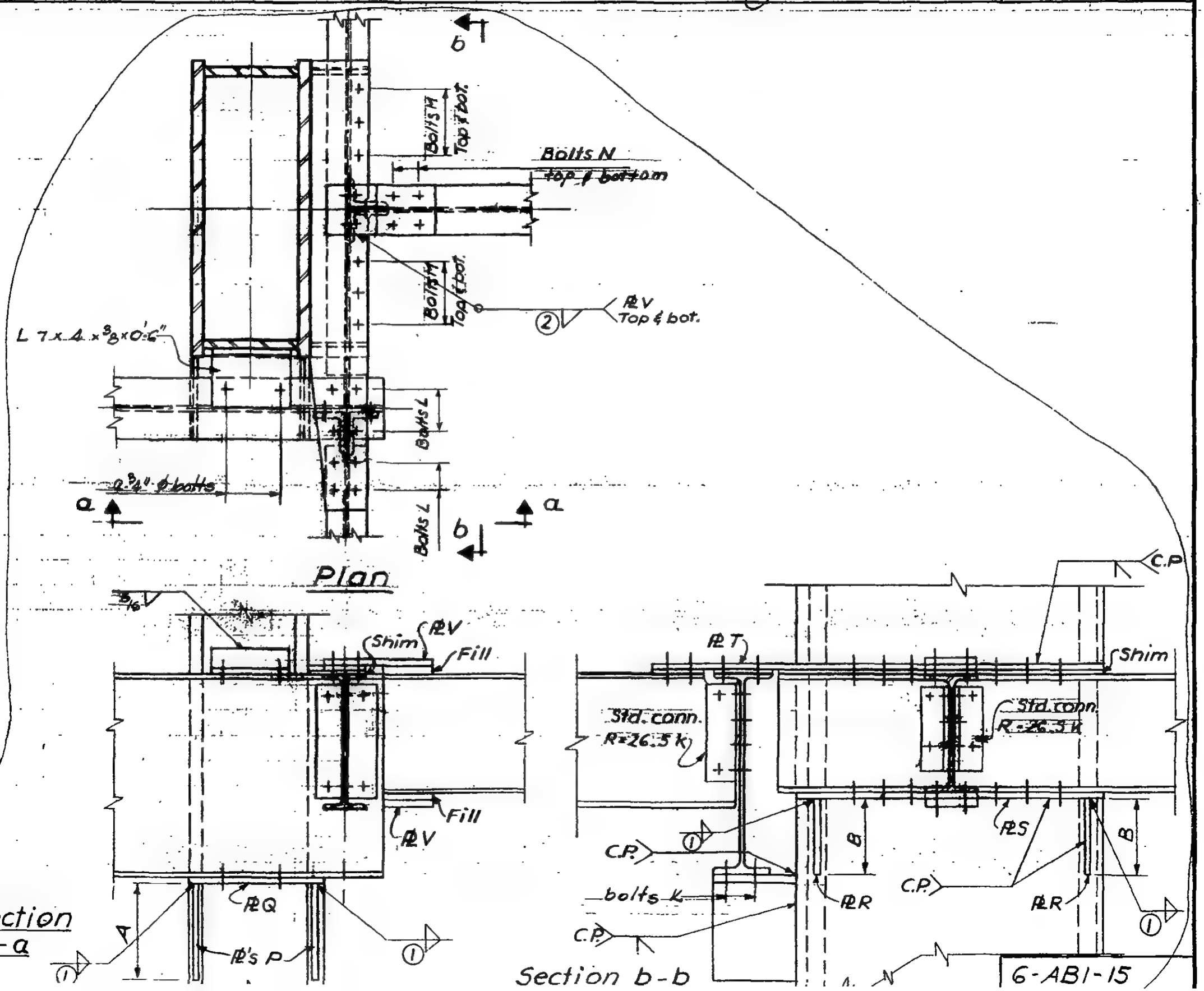

LICENSED PROFESSIONAL ENGINEER
LESLIE E. ROBERTSON
No. 34360
UNIVERSITY OF THE STATE OF NEW YORK

6-AB1-15

SKILLING - HELLE - CHRISTIANSEN - ROBERTSON Structural & Civil Engineers

PROJECT THE WORLD TRADE CENTER | TITLE SCHEDULE FOR DETAIL 209 A | DATE 10-2-67

REVISIONS

	209 A					
PLATES						
P	3/4					
Q	3/4					
R	5/8					
S	5/8					
T	5/8					
V	1/2					
DIMENSIONS						
A	1'-0"					
B	0'-10"					
BOLTS						
K	4 - 3/4" ϕ					
L	4 - 3/4" ϕ					
M	3 - 3/4" ϕ					
N	4 - 3/4" ϕ					
WELDS						
①	5/16					
②	1/4					

LICENSED PROFESSIONAL ENGINEER
LESLIE E. ROBERTSON
No. 34360
UNIVERSITY OF THE STATE OF NEW YORK

6-AB1-15.1

SKILLING - HELLE - CHRISTIANSEN - ROBERTSON Structural & Civil Engineers

PROJECT THE WORLD TRADE CENTER | TITLE CONNECTION DETAIL ~~B~~ B | DATE 4-17-68

REVISIONS

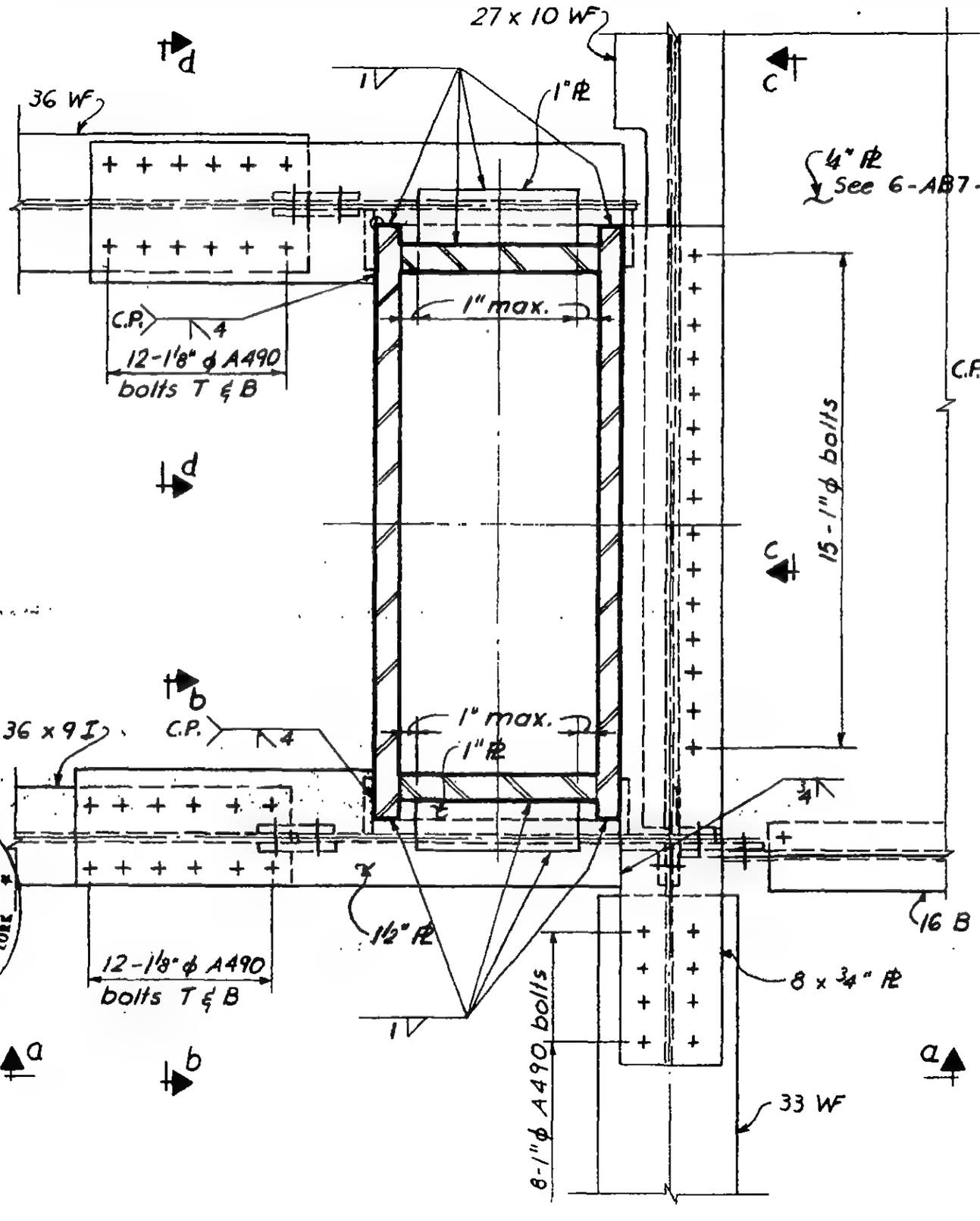

Plan

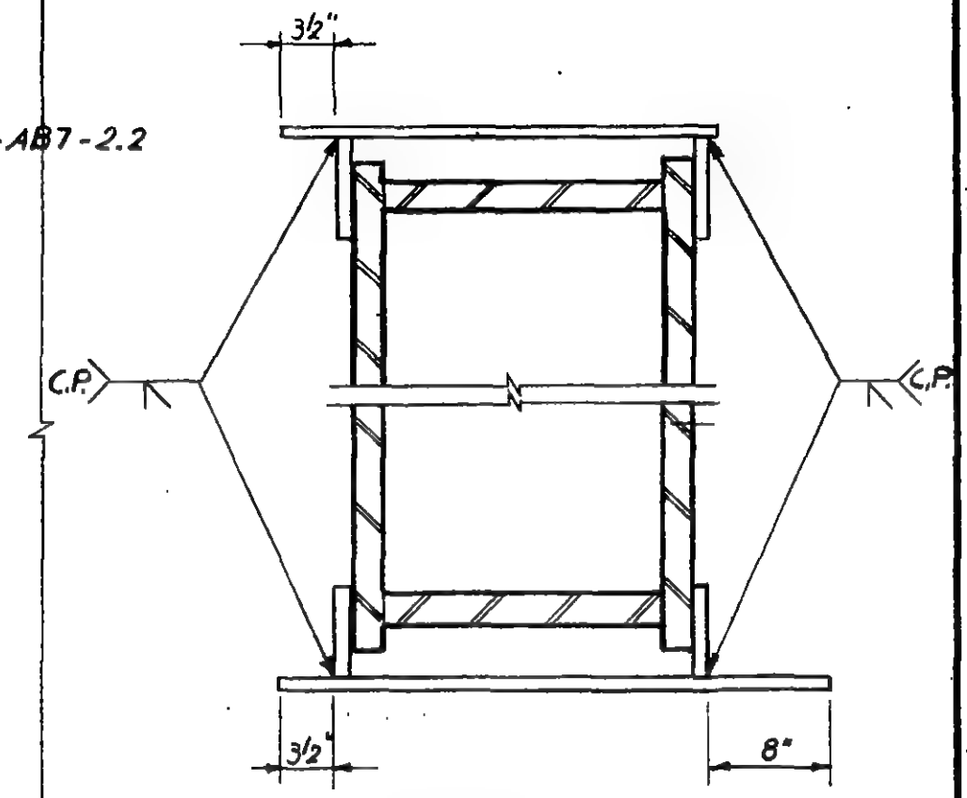

Detail 1

See 6-AB1-15.3 for sections

LICENSED PROFESSIONAL ENGINEER
LESLIE E. ROBERTSON
No. 34360
UNIVERSITY OF THE STATE OF NEW YORK

6-AB1-15.2

SKILLING - HELLE - CHRISTIANSEN - ROBERTSON Structural & Civil Engineers

PROJECT THE WORLD TRADE CENTER | TITLE CONNECTION DETAIL 209B | DATE 4-17-68

REVISIONS

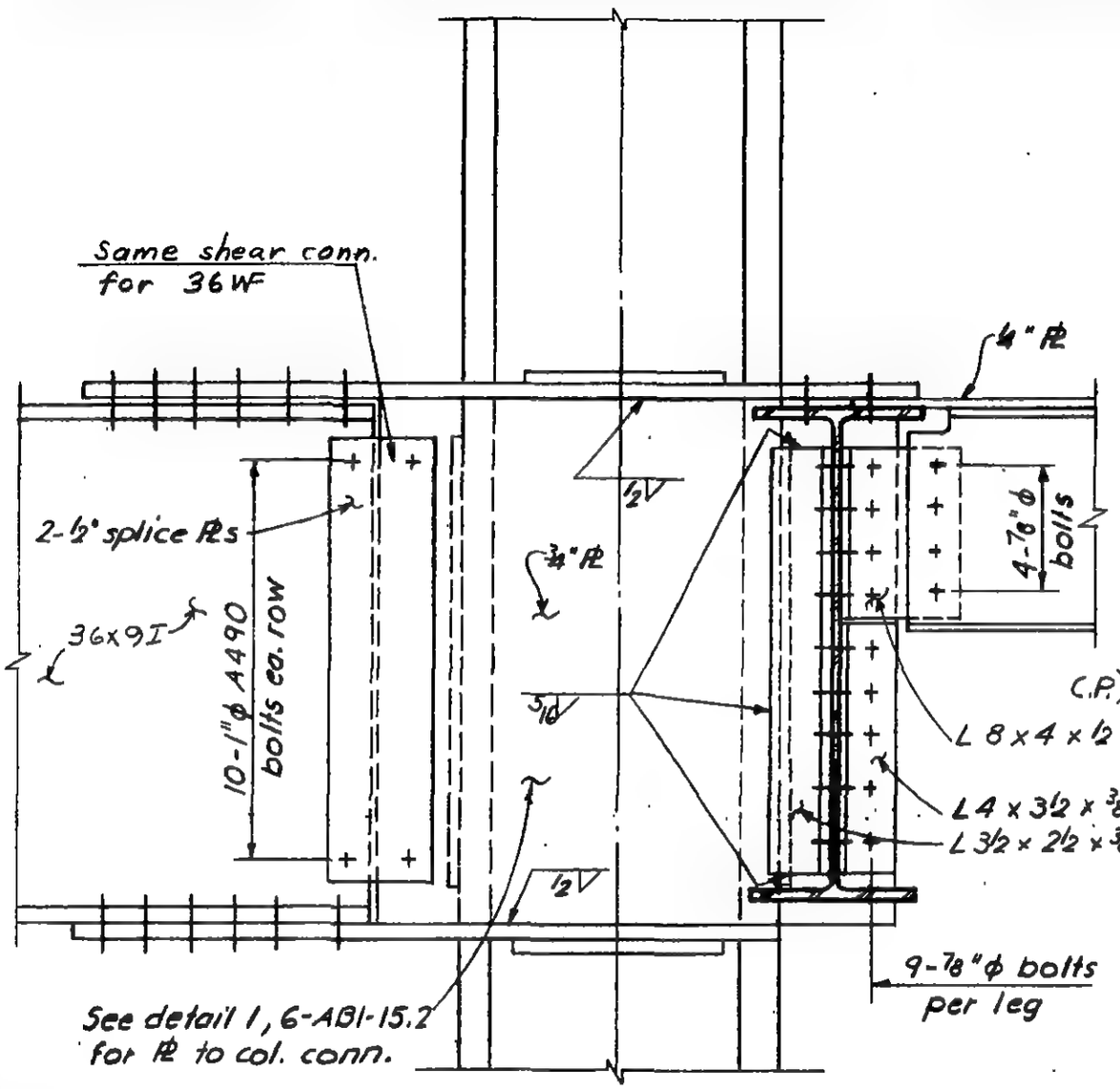

Section a-a

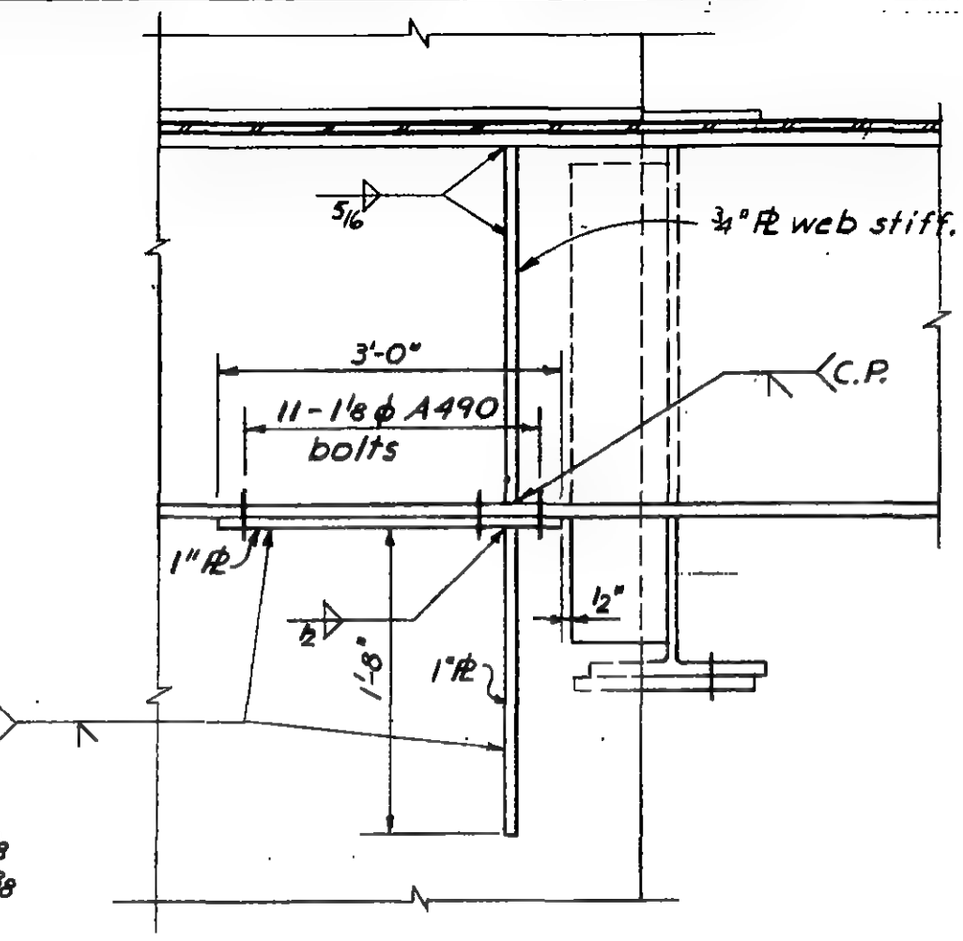

Section c-c

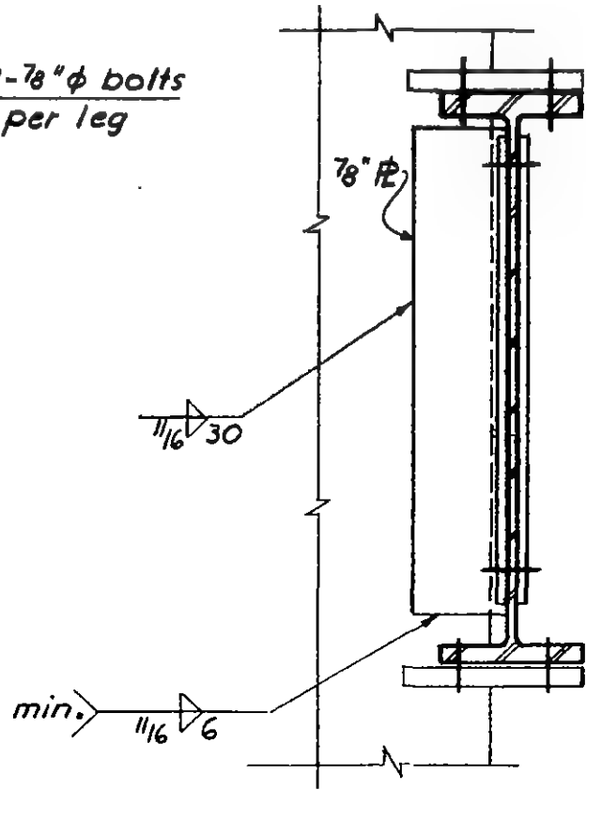

Section b-b
Section d-d (sim.)

LICENSED PROFESSIONAL ENGINEER
LESLIE E. ROBERTSON
No. 34360
UNIVERSITY OF THE STATE OF NEW YORK

6-ABI-15.3

WORTHINGTON, SKILLING, HELLE & JACKSON — Civil & Structural Engineers

PROJECT	TITLE	DATE
THE WORLD TRADE CENTER	CONNECTION DETAIL 210 A	6-30-67

REVISIONS

10-5-67

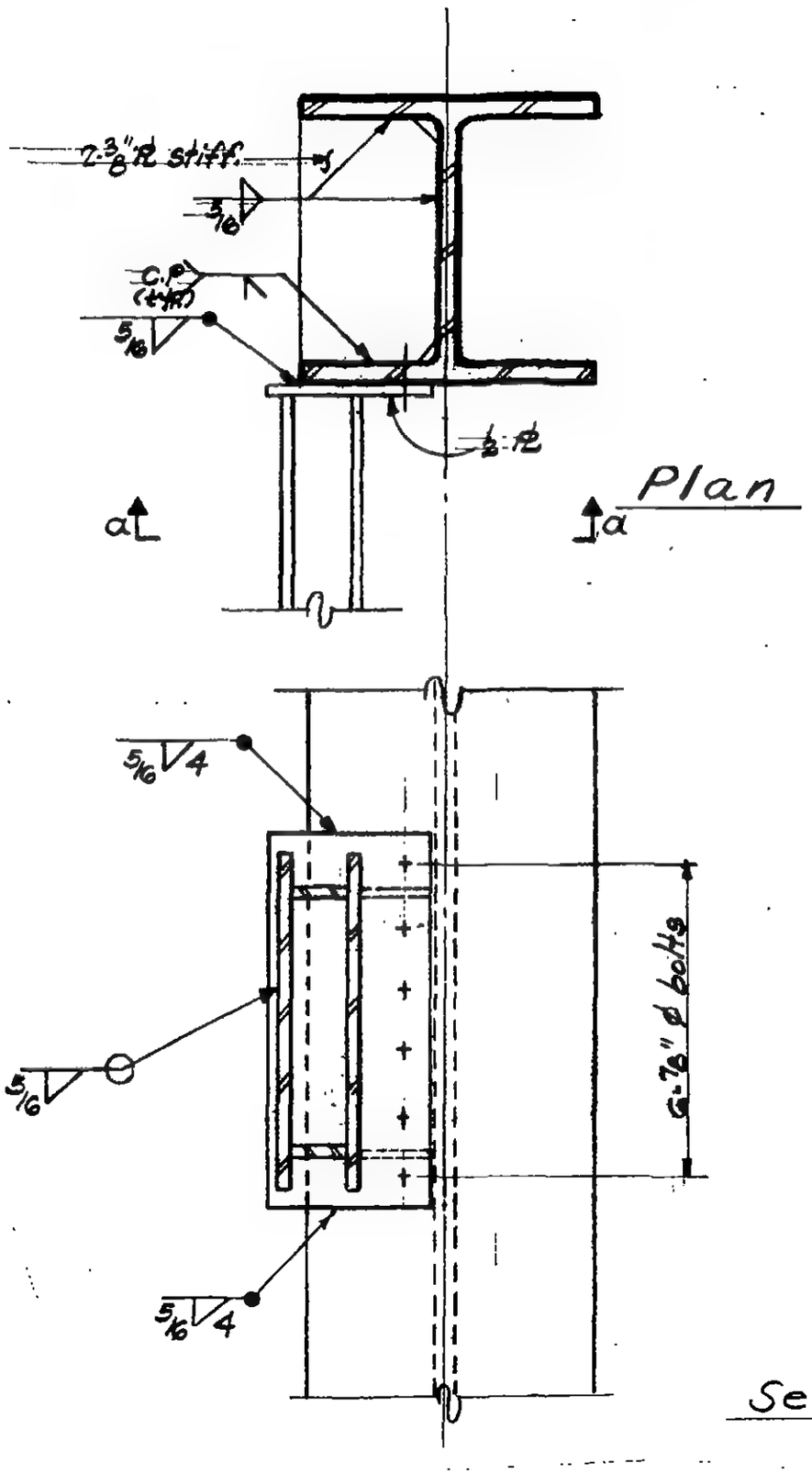

Section a-a

LICENSED PROFESSIONAL ENGINEER
LESLIE E. ROBERTSON
No. 34360
UNIVERSITY OF THE STATE OF NEW YORK

G-AB1-16

WORTHINGTON, SKILLING, HELLE & JACKSON — Civil & Structural Engineers

PROJECT: THE WORLD TRADE CENTER | TITLE: CONNECTION DETAIL 211A | DATE: 5-22-67

REVISIONS

9-15-67

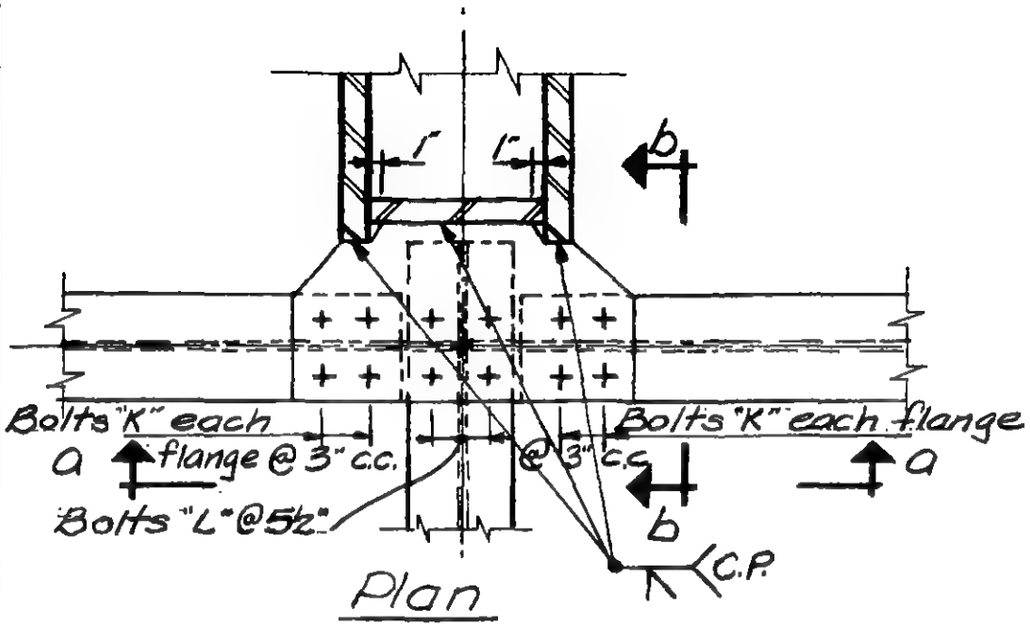

Plan

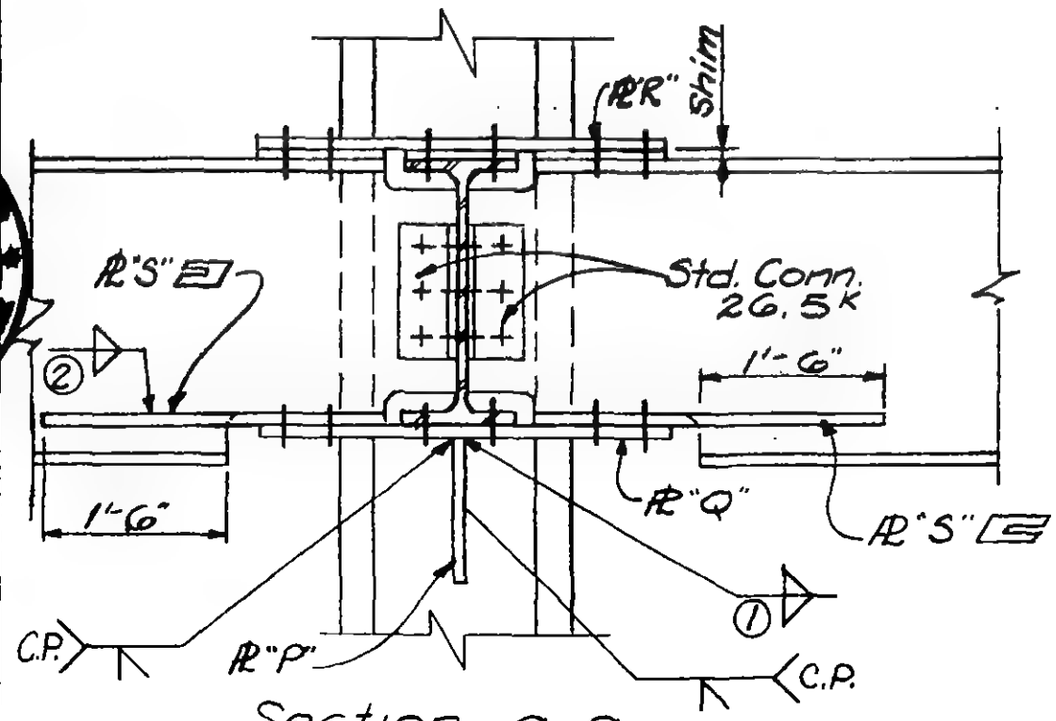

Section a-a

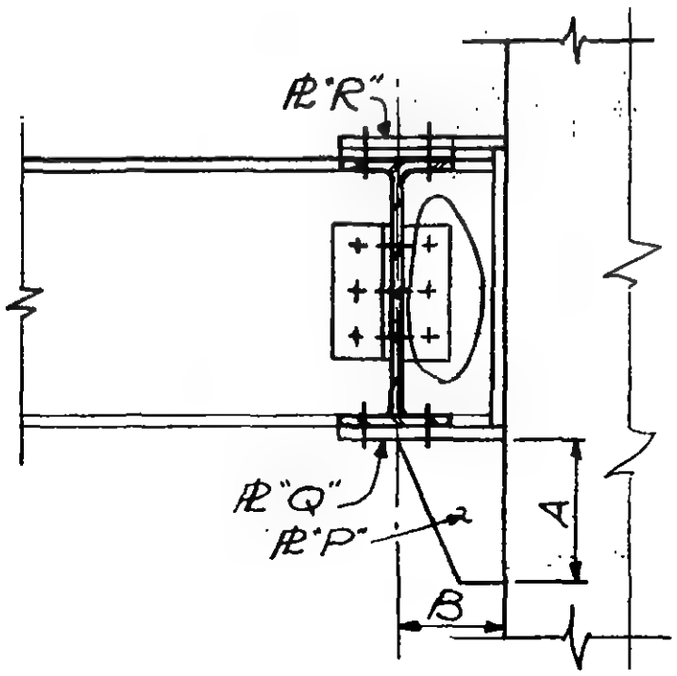

Section b-b

6-AB1-17

SKILLING - HELLE - CHRISTIANSEN - ROBERTSON Structural & Civil Engineers

PROJECT THE WORLD TRADE CENTER | TITLE SCHEDULE FOR DETAIL 211 A, B | DATE 9-15-67

REVISIONS

10-2-67

	211 A	211 B
PLATES		
P	3/4"	1"
Q	3/4"	1"
R	5/8"	1/2"
S	8" x 11/16"	—
DIMENSIONS		
A	1'-3"	1'-4"
B	0'-8 1/2"	0'-9"
BOLTS		
K	4 - 3/4" ϕ	—
L	4 - 3/4" ϕ	4 - 3/4" ϕ
WELDS		
①	5/16"	5/16
②	5/16"	—

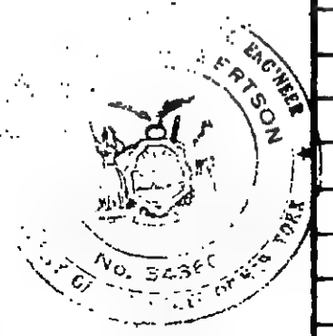

G-AB1-17.1

SKILLING - HELLE - CHRISTIANSEN - ROBERTSON — Structural & Civil Engineers

PROJECT THE WORLD TRADE CENTER | TITLE CONNECTION DETAIL 2HB | DATE 10-2-67

REVISIONS

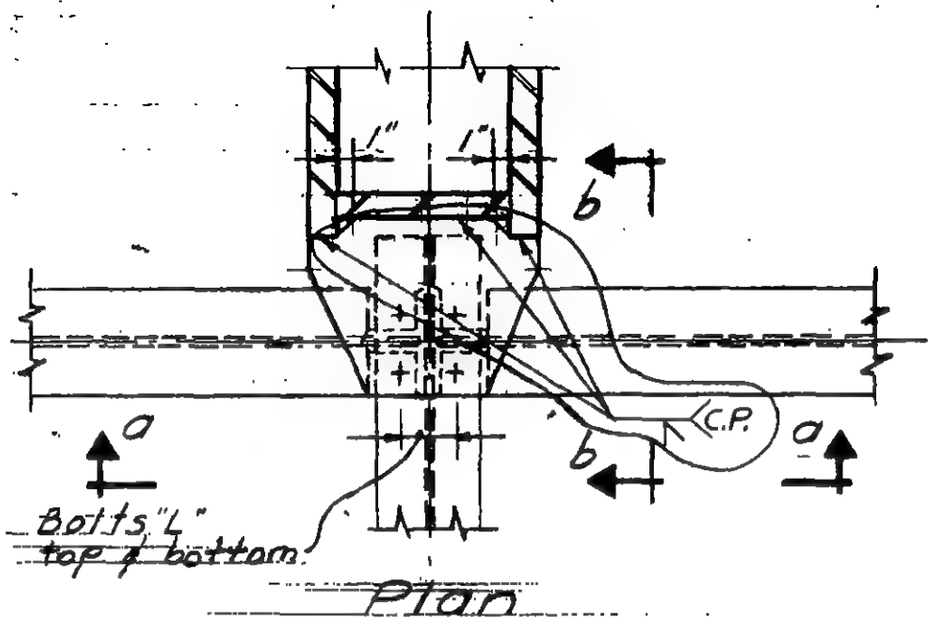

Plan

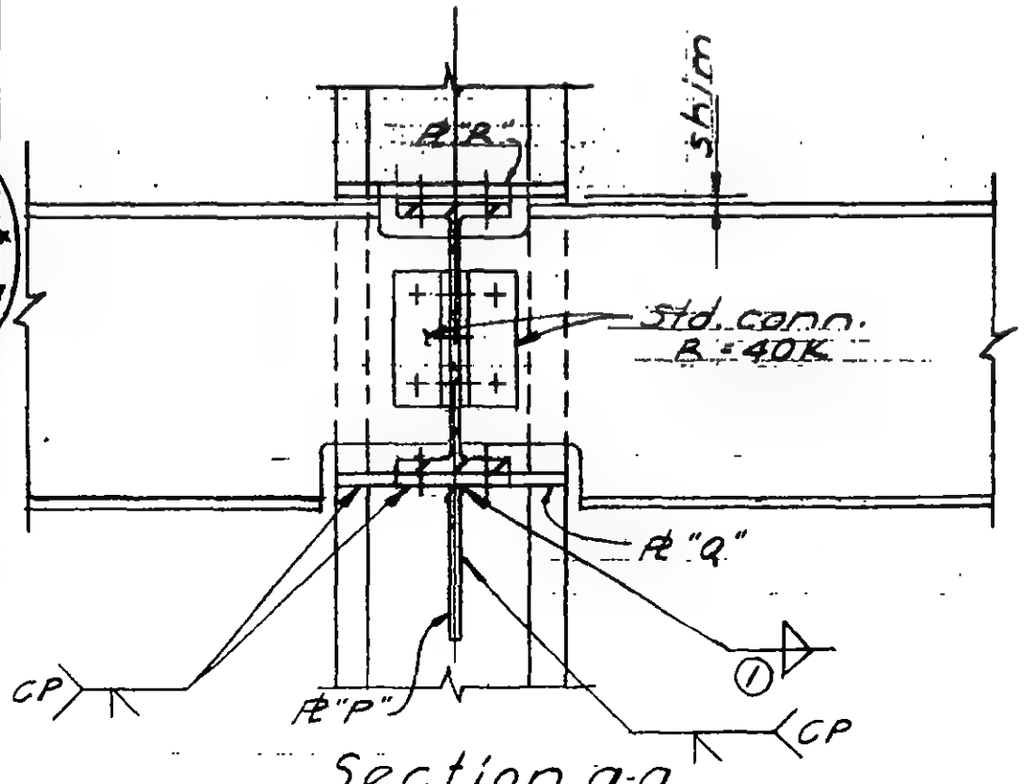

Section a-a

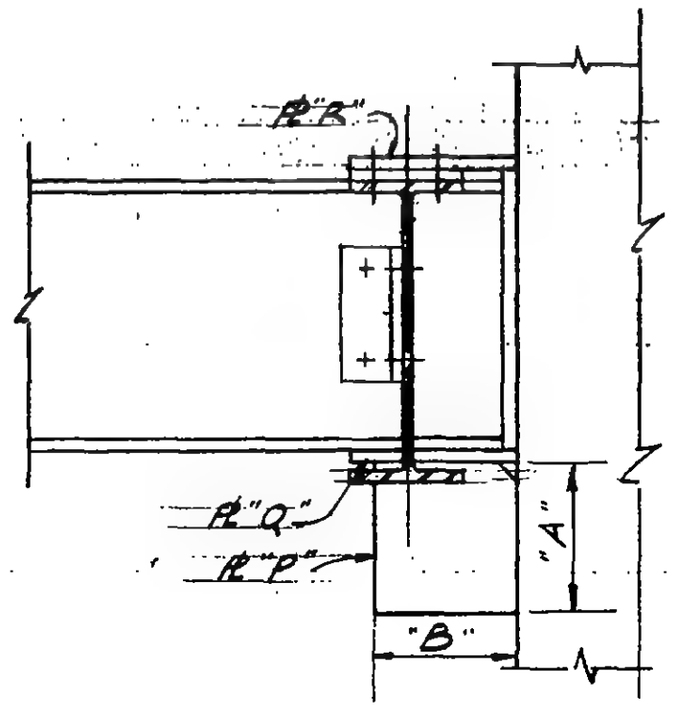

Section b-b

6-AB1-17.2

LICENSED PROFESSIONAL ENGINEER
LESLIE E. ROBERTSON
No. 34360
UNIVERSITY OF THE STATE OF NEW YORK

SKILLING - HELLE - CHRISTIANSEN - ROBERTSON Structural & Civil Engineers

PROJECT THE WORLD TRADE CENTER | TITLE CONNECTION DETAIL 212 | DATE 1-20-67

REVISIONS

12-21-67

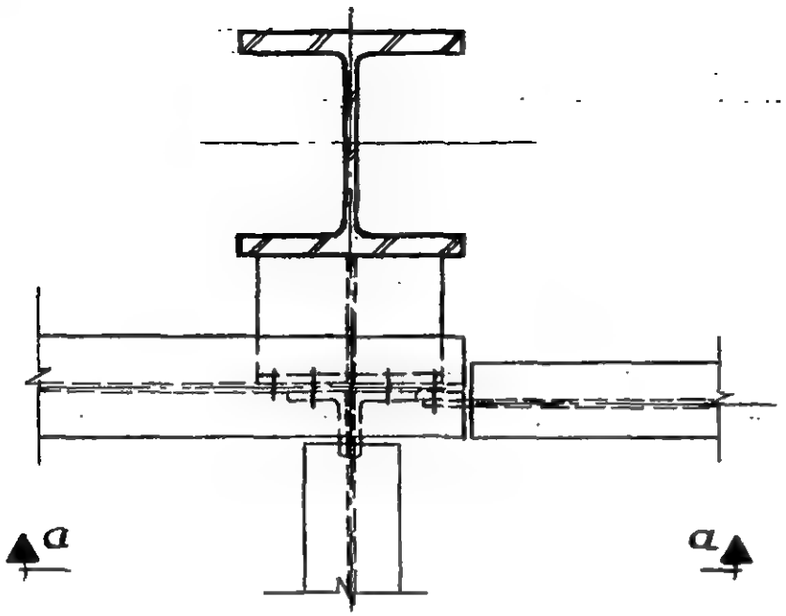

Plan

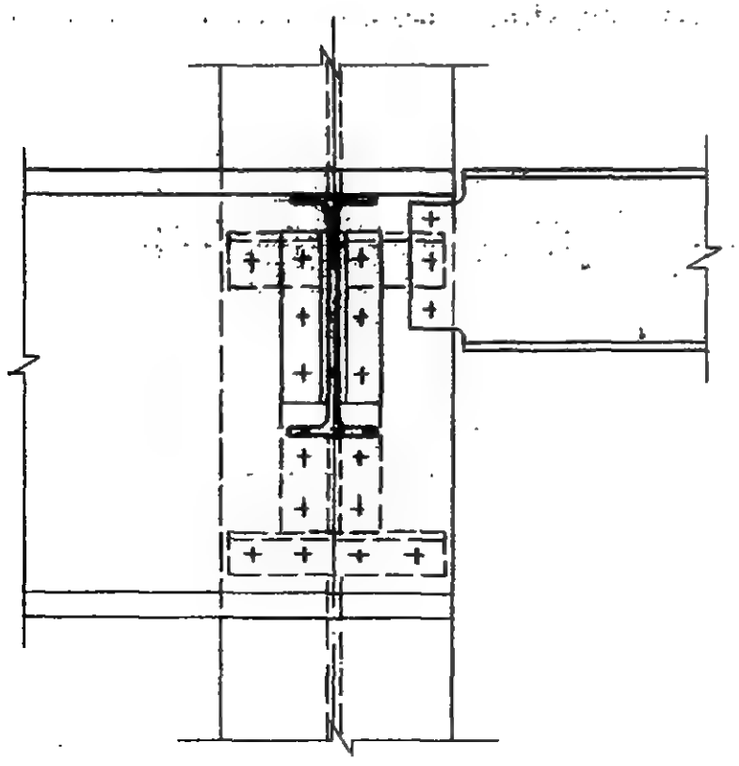

Section a-a

LICENSED PROFESSIONAL ENGINEER
LESLIE E. ROBERTSON
No. 34360
OF THE STATE OF NEW YORK

6-AB1-18

WORTHINGTON, SKILLING, HELLE & JACKSON — Civil & Structural Engineers

PROJECT: THE WORLD TRADE CENTER | TITLE: CONNECTION DETAIL 213 A | DATE: 5-9-67

REVISIONS

7-28-67

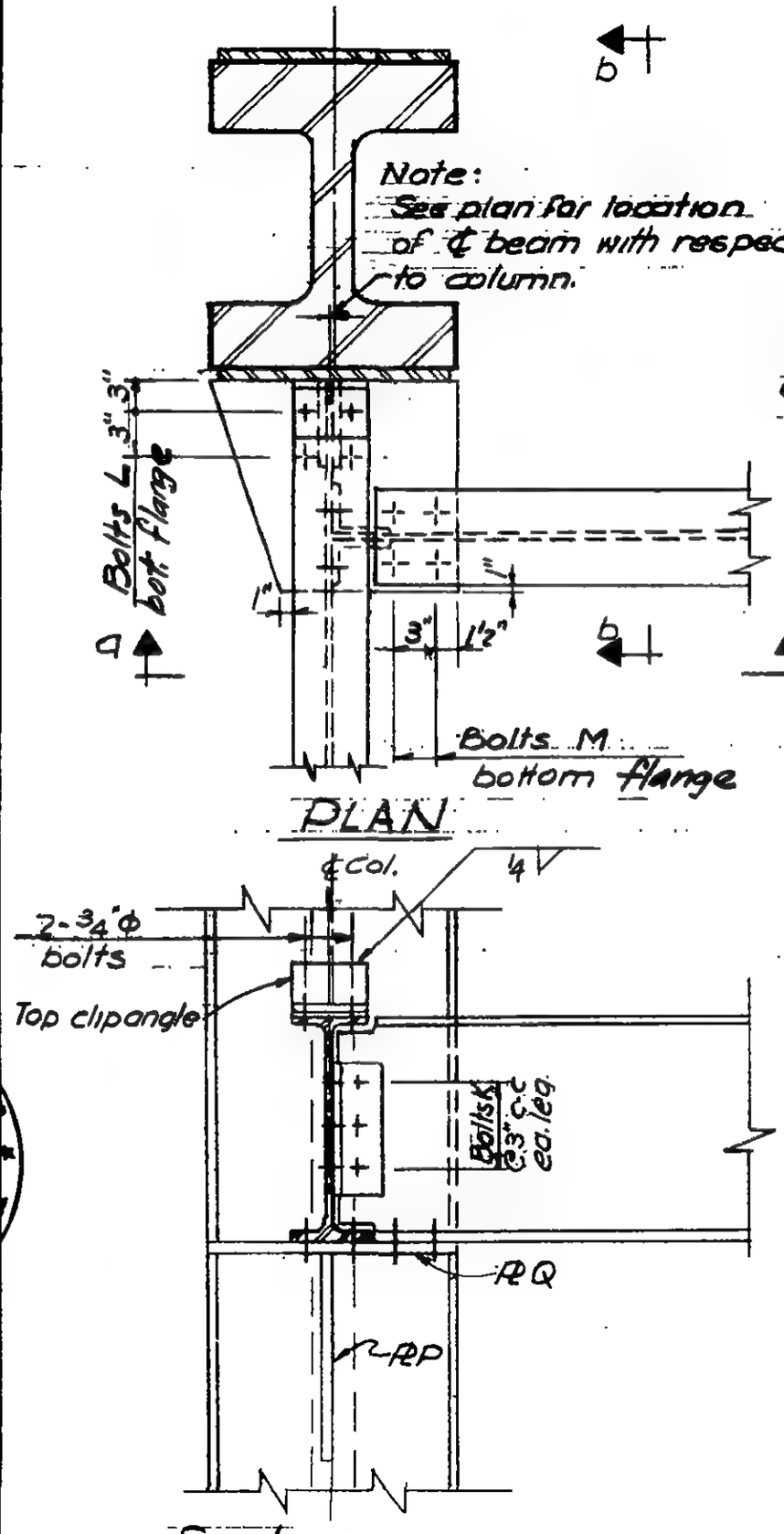

Note: Detail applies to columns with & without cover PLs.

Section a-a

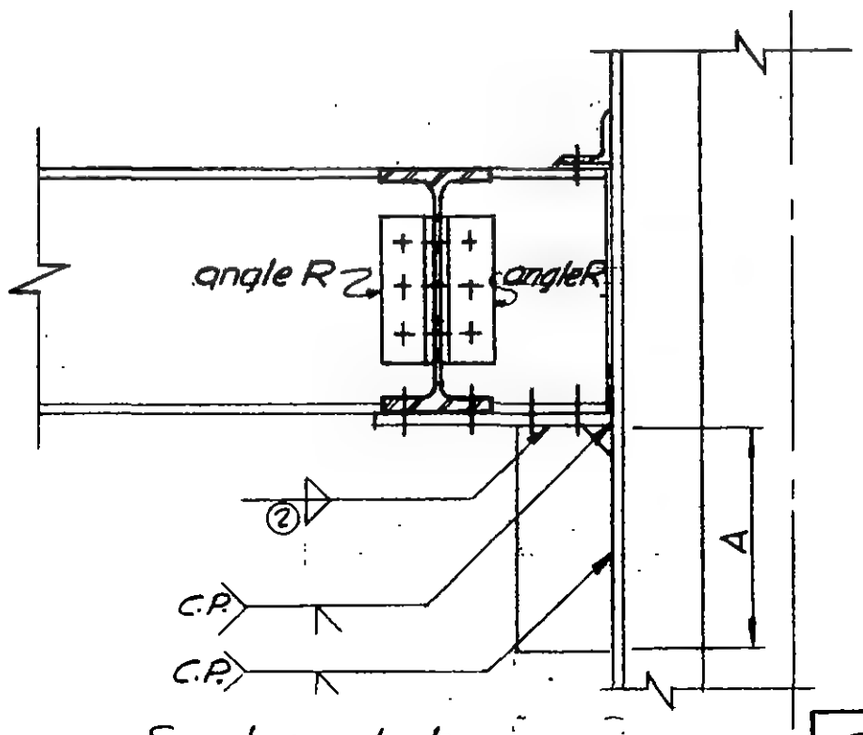

Section b-b

6-AB1-20

LICENSED PROFESSIONAL ENGINEER — LESLIE E. ROBERTSON — No. 34360 — UNIVERSITY OF THE STATE OF NEW YORK

SKILLING - HELLE - CHRISTIANSEN - ROBERTSON Structural & Civil Engineers

PROJECT THE WORLD TRADE CENTER | TITLE SCHEDULE FOR DETAIL 213 A | DATE 7-28-67

REVISIONS

	213 A					
PLATES						
P	7" x 1"					
Q	3/4"					
ANGLES						
R	4 x 3½ x 5/16					
DIMENSIONS						
A	1'-3"					
BOLTS						
K	3 - ¾" ϕ					
L	4 - ¾" ϕ					
M	4 - 1" ϕ					
Welds						
②	5/16					

6-AB1-20.1

WORTHINGTON, SKILLING, HELLE & JACKSON — Civil & Structural Engineers

PROJECT THE WORLD TRADE CENTER | TITLE CONNECTION DETAIL 213-B | DATE 7-5-67

REVISIONS

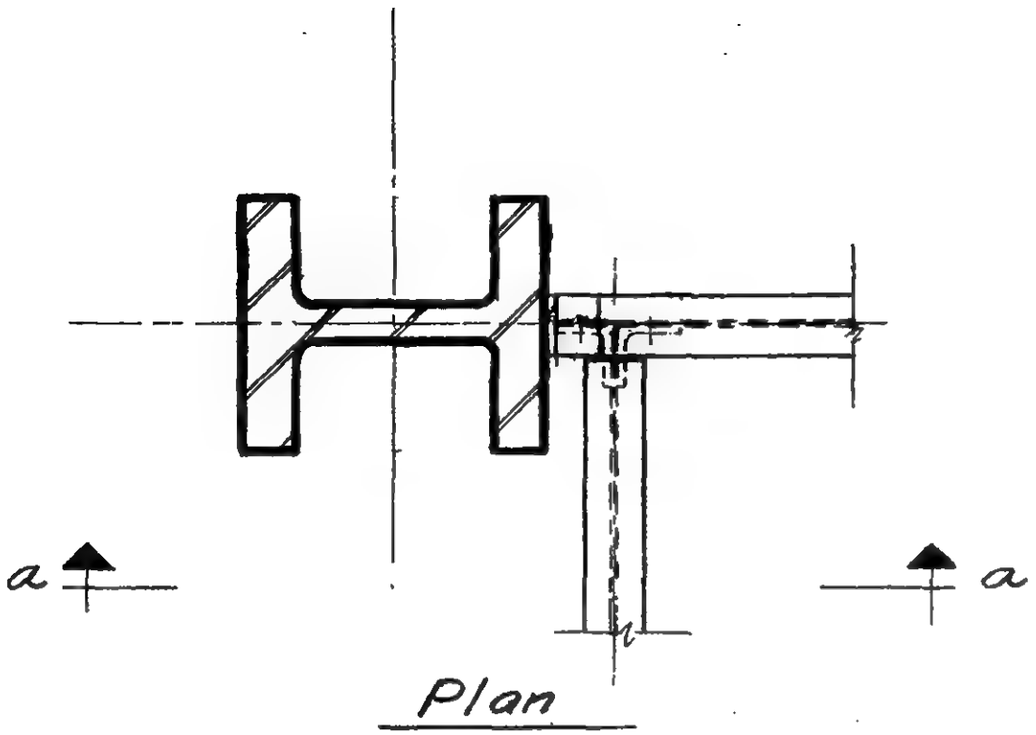

Plan

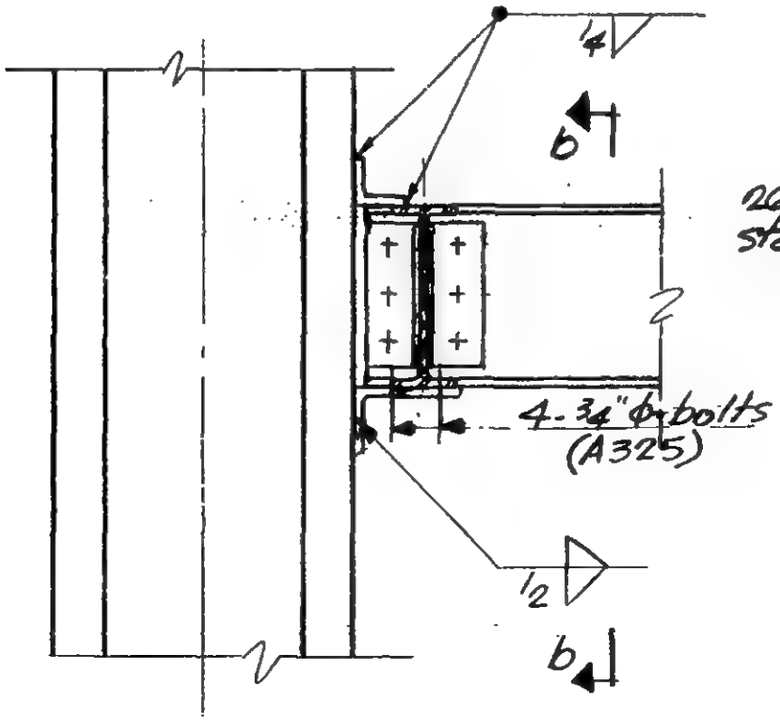

Section a-a

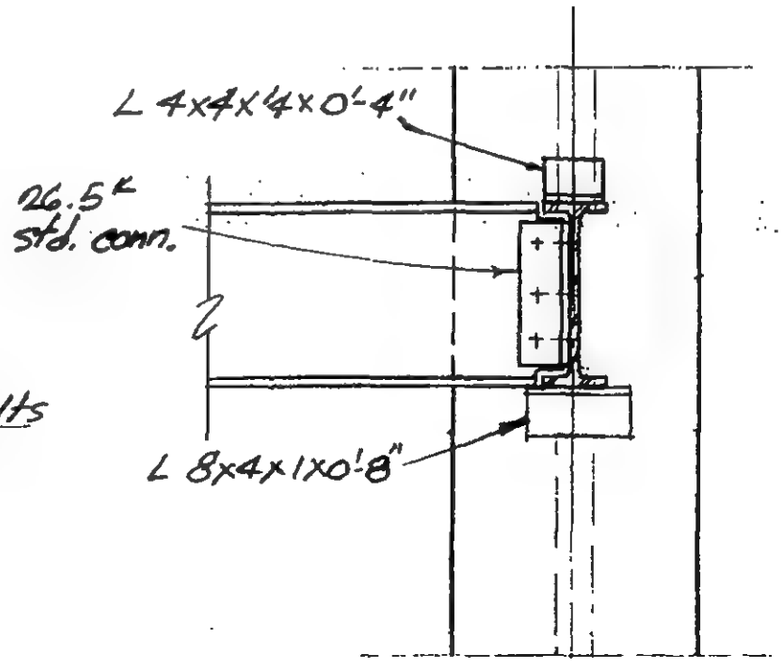

Section b-b

LICENSED PROFESSIONAL ENGINEER
LESLIE E. ROBERTSON
No. 34360
REGISTERED IN THE STATE OF NEW YORK

6-AB1-20.2

WORTHINGTON, SKILLING, HELLE & JACKSON — Civil & Structural Engineers

PROJECT THE WORLD TRADE CENTER | TITLE CONNECTION DETAIL 214 A | DATE 5-1-67

REVISIONS

7-28-67

9-15-67

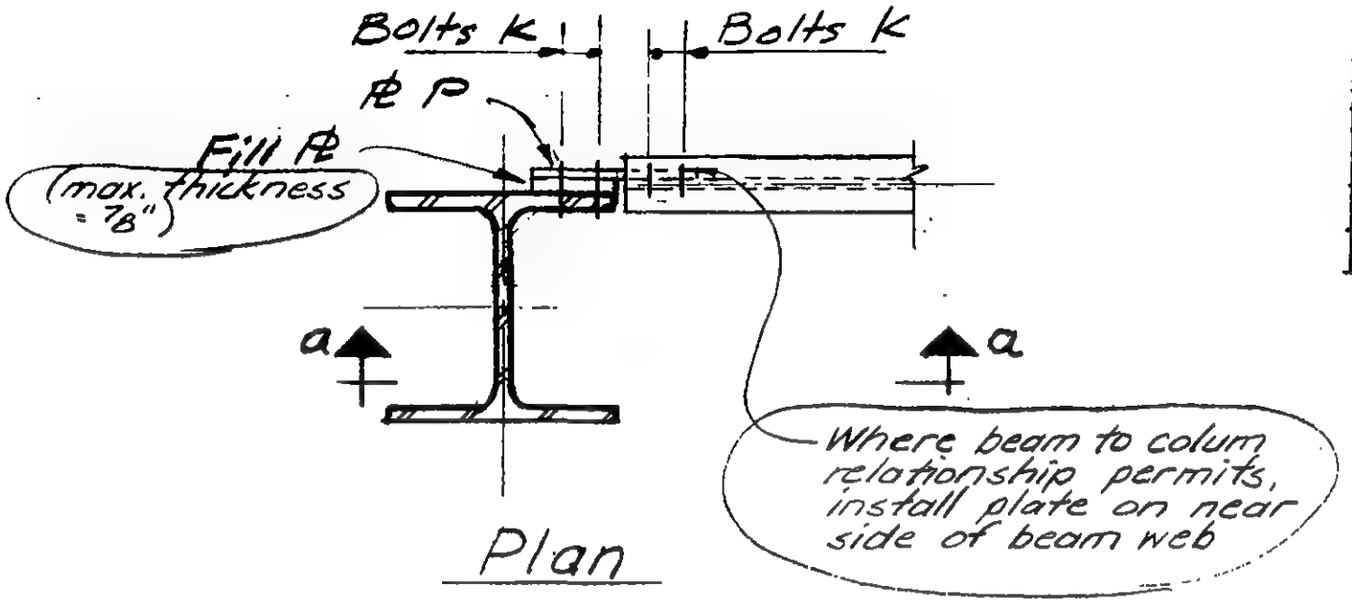

Plan

SCHEDULE		
Detail	Plate P	Bolts K
214 A	1/2"	4-1 1/8" ϕ

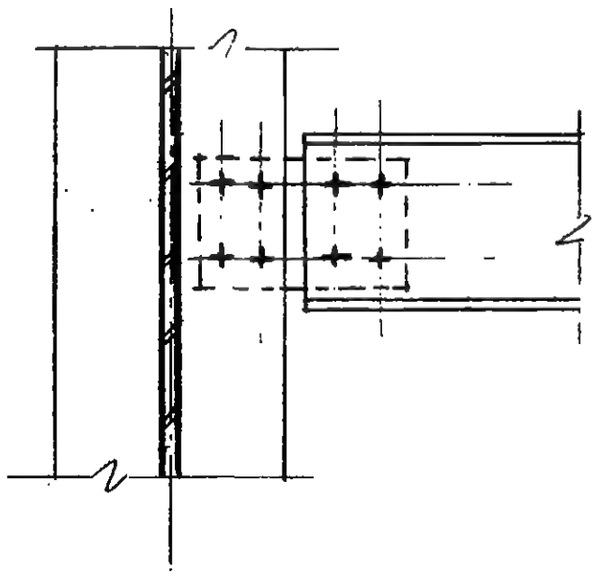

Section a-a

LICENSED PROFESSIONAL ENGINEER
LESLIE E. ROBERTSON
No. 24300
UNIVERSITY OF THE STATE OF NEW YORK

6-AB1-21

SKILLING - HELLE - CHRISTIANSEN - ROBERTSON Structural & Civil Engineers

PROJECT THE WORLD TRADE CENTER | TITLE CONNECTION DETAIL 214B | DATE 8-5-67

REVISIONS

11-16-67

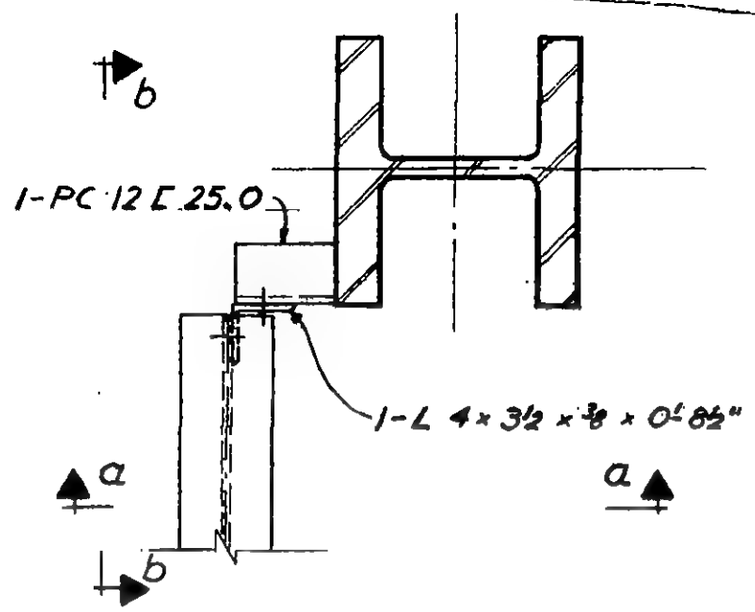

Plan

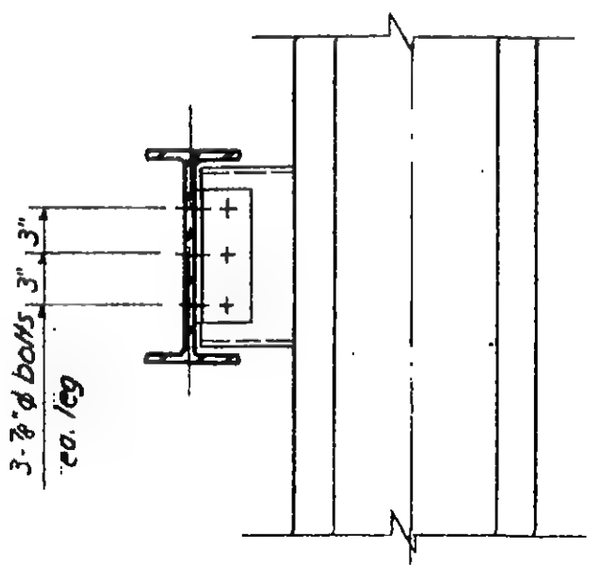

Section a-a

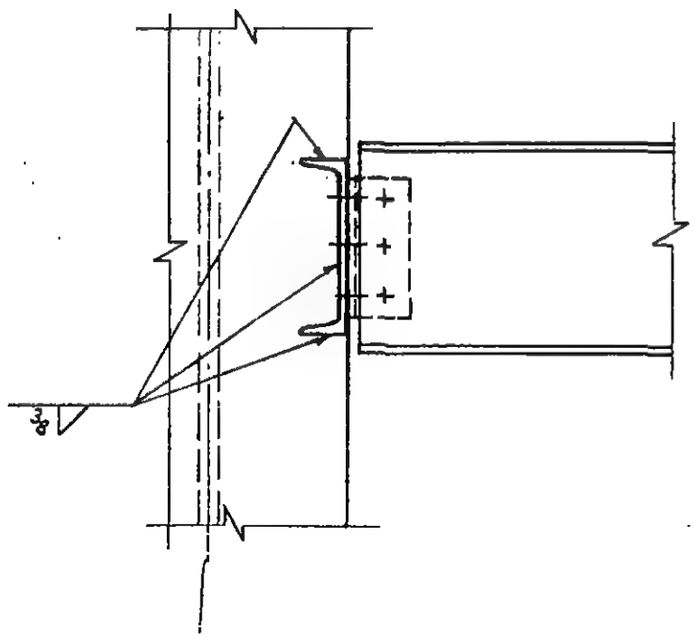

Section b-b

LICENSED PROFESSIONAL ENGINEER
LESLIE E. ROBERTSON
No. 34360
UNIVERSITY OF THE STATE OF NEW YORK

6-AB1-21.1

WORTHINGTON, SKILLING, HELLE & JACKSON — Civil & Structural Engineers

PROJECT: THE WORLD TRADE CENTER | TITLE: CONNECTION DETAIL 215 A B C D | DATE: 5-1-67

REVISIONS

7-28-67

9-15-67

10-5-67

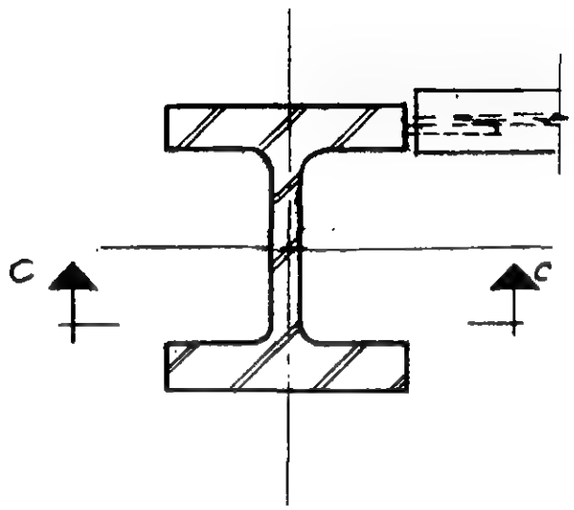

Plan

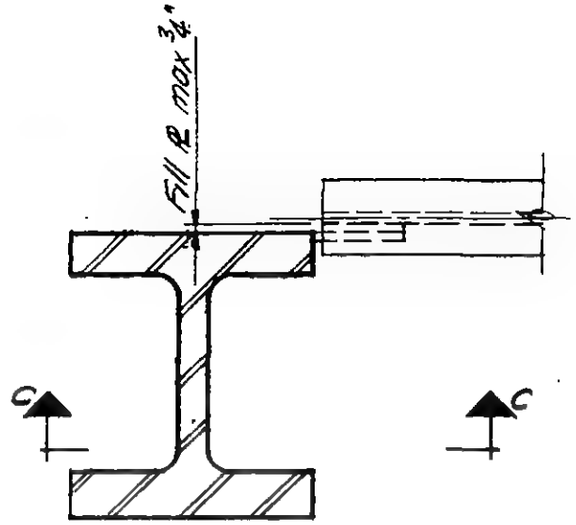

Plan where fill plates are required

SCHEDULE		
Detail	Plate P	Bolts K
215 A	1"	4 - 1⅛" ϕ
215 B	⅝"	6 - 1⅛" ϕ
215 C	¾"	14 - ⅞" ϕ
215 D	⅝"	14 - ¾" ϕ

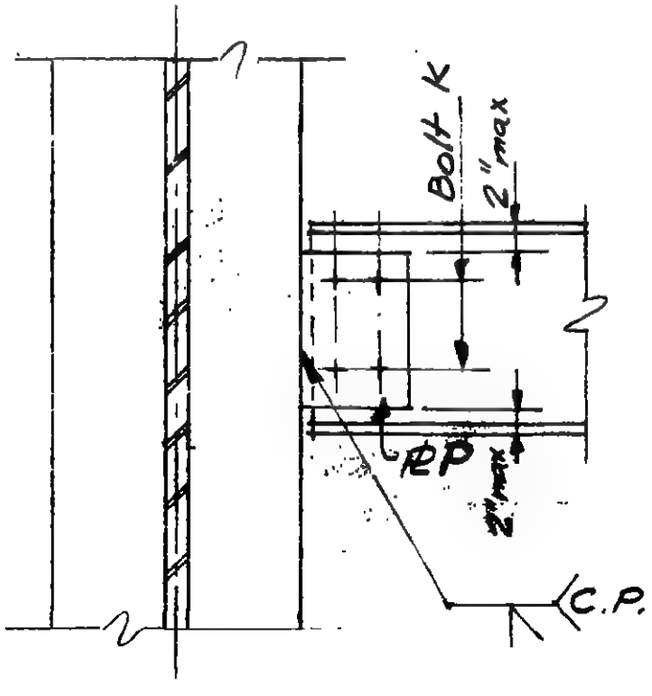

Section c-c

LICENSED PROFESSIONAL ENGINEER
LESLIE E. ROBERTSON
No. 34360
UNIVERSITY OF THE STATE OF NEW YORK

6-AB1-22

WORTHINGTON, SKILLING, HELLE & JACKSON — Civil & Structural Engineers

PROJECT: THE WORLD TRADE CENTER | TITLE: CONNECTION DETAIL 216 A, C | DATE: 5-1-67

REVISIONS

7-28-67
10-5-67

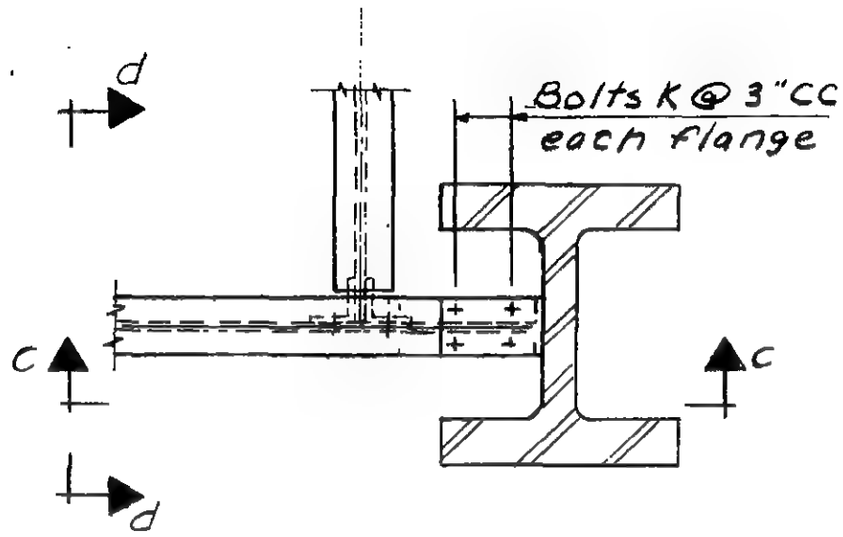

Plan a-a

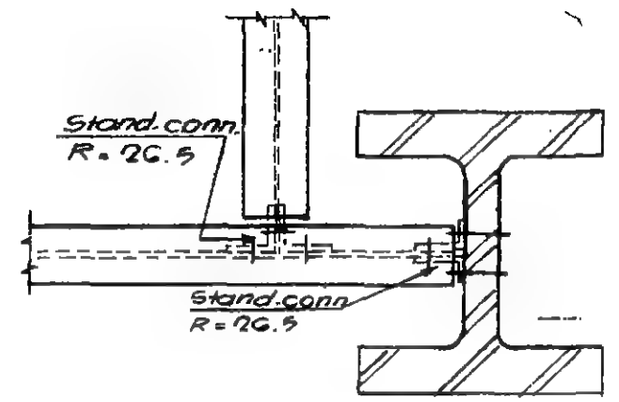

Plan
(For Det. 216C only.)

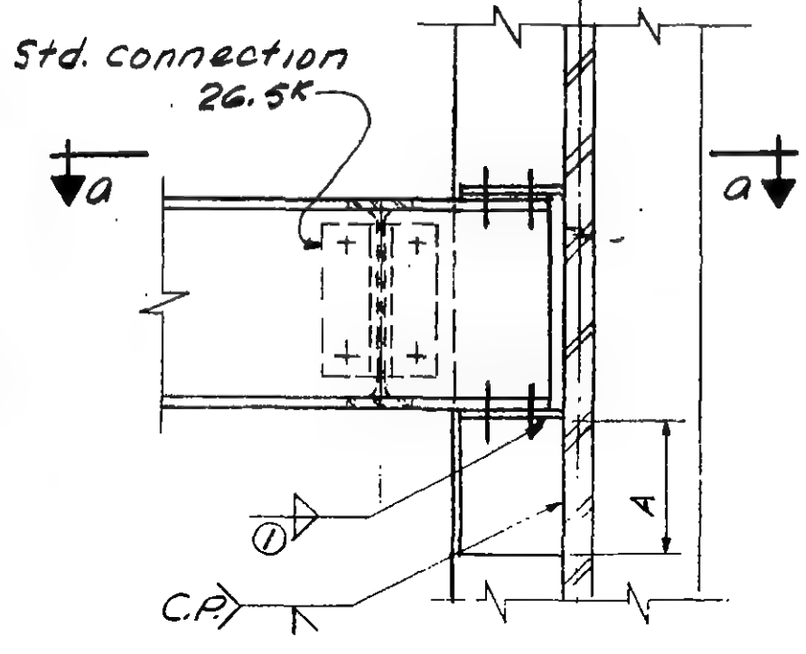

Section c-c

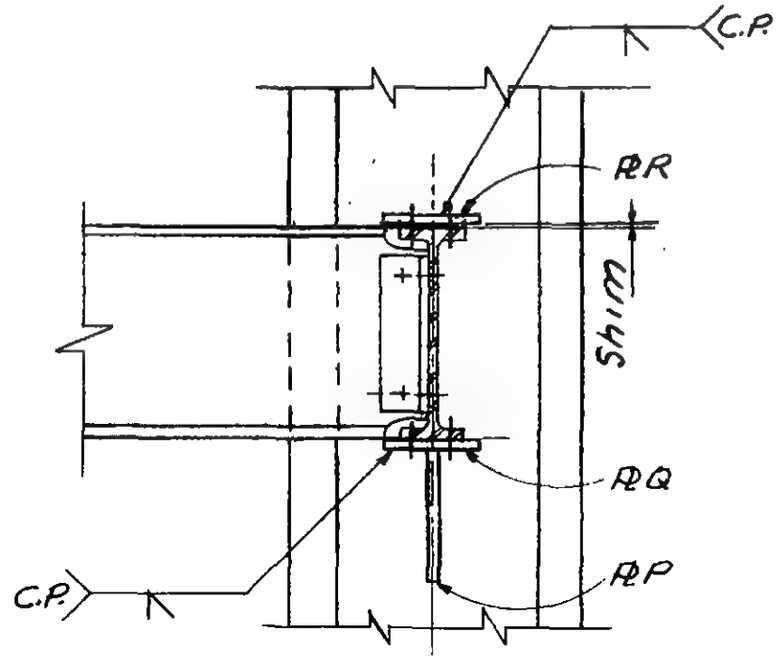

Section d-d

LICENSED PROFESSIONAL ENGINEER
LESLIE E. ROBERTSON
No. 34960
UNIVERSITY OF THE STATE OF NEW YORK

6-AB1-23

SKILLING - HELLE - CHRISTIANSEN - ROBERTSON Structural & Civil Engineers

PROJECT THE WORLD TRADE CENTER | TITLE SCHEDULE FOR DETAIL 216 A | DATE 7-28-67

REVISIONS

	216 A					
PLATES						
P	7" x ½"					
Q	½"					X
R	½"					
DIMENSION						
A	1'-0"					
BOLTS						
K	4 - ¾" ϕ					
WELDS						
①	5/16					

6-ABI-23.1

WORTHINGTON, SKILLING, HELLE & JACKSON Civil & Structural Engineers

PROJECT THE WORLD TRADE CENTER | TITLE CONNECTION DETAIL 217B | DATE 6-5-67

REVISIONS

8-5-67

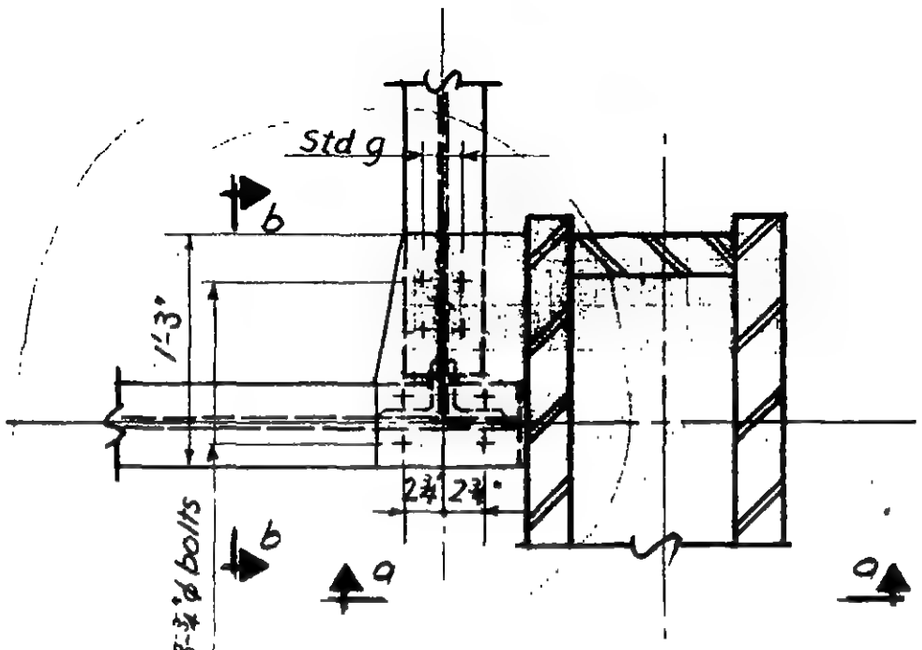

Plan

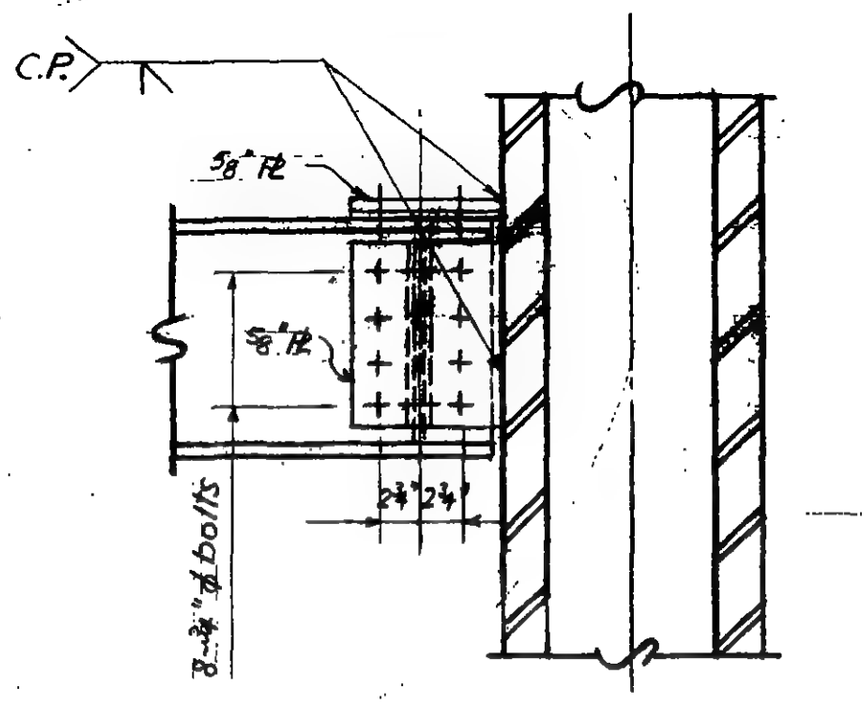

Section a-a

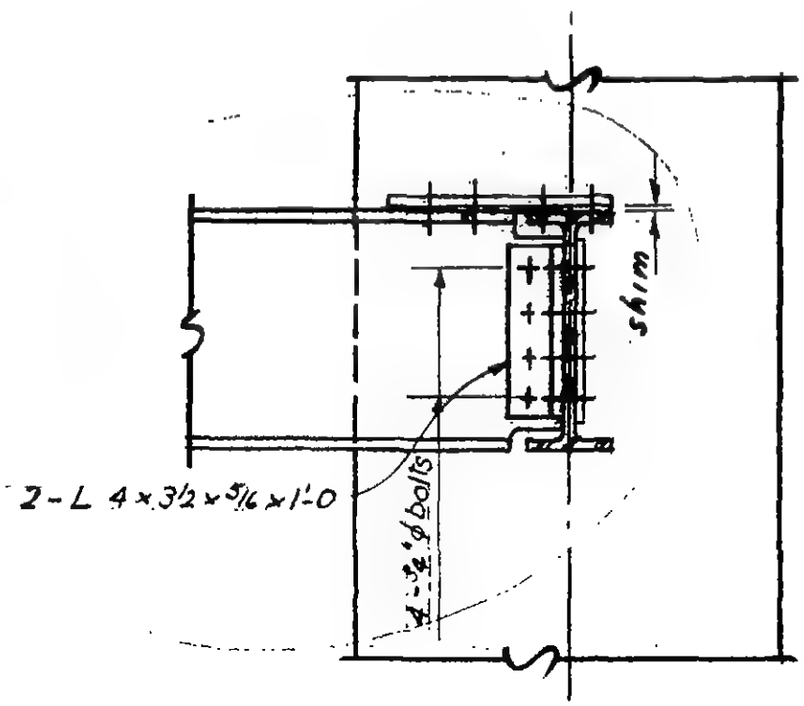

Section b-b

LICENSED PROFESSIONAL ENGINEER
LESLIE E. ROBERTSON
No. 34360
UNIVERSITY OF THE STATE OF NEW YORK

6-AB1-24

WORTHINGTON, SKILLING, HELLE & JACKSON — Civil & Structural Engineers

PROJECT THE WORLD TRADE CENTER | TITLE CONNECTION DETAIL 217 A (C) | DATE 7-5-67

REVISIONS

7-28-67
10-2-67

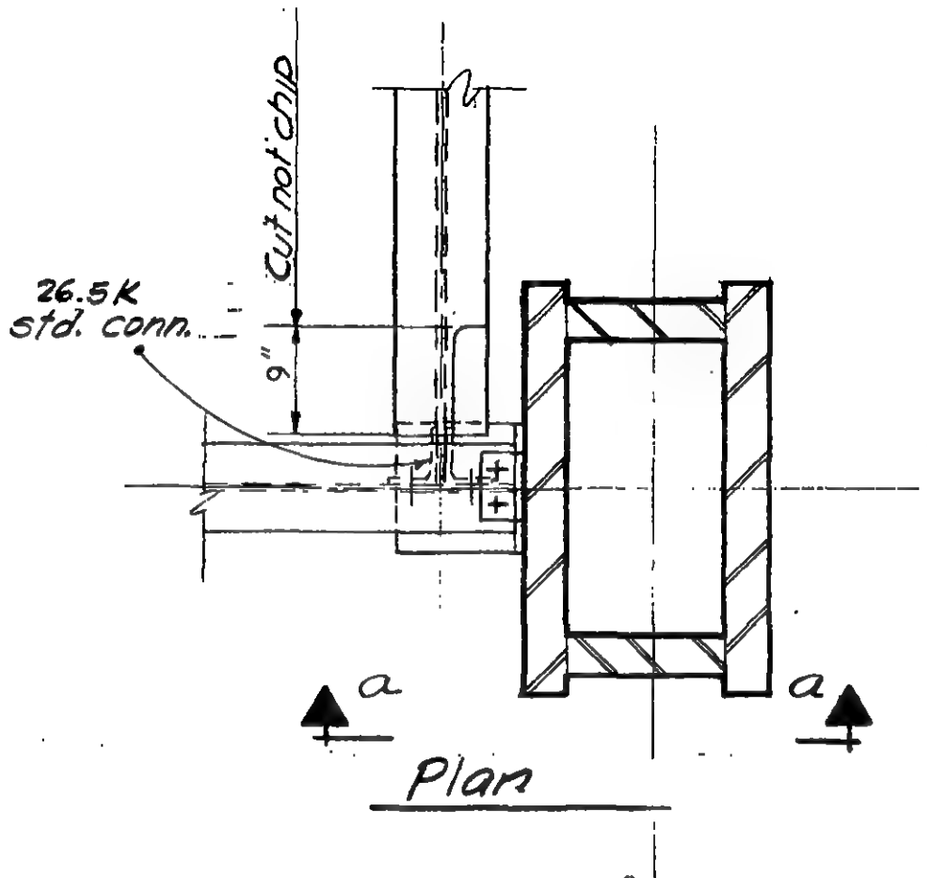

Plan

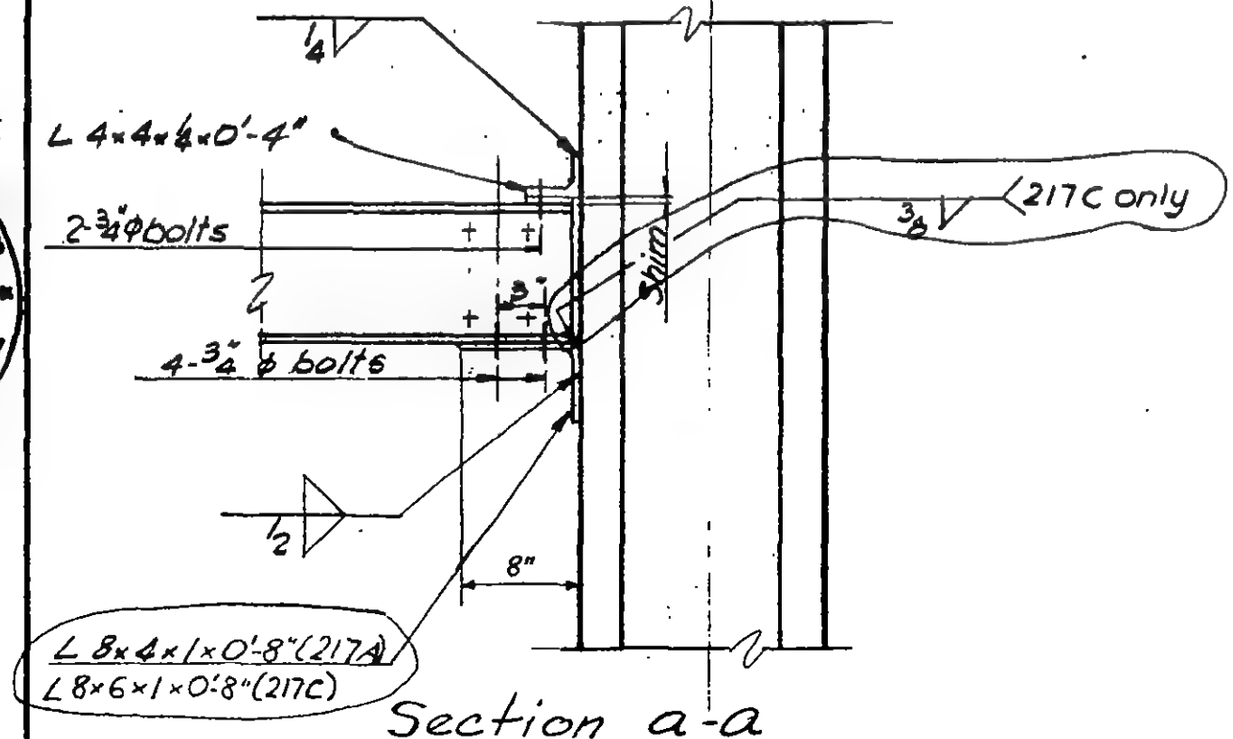

Section a-a

G-AB1-24.1

LICENSED PROFESSIONAL ENGINEER LESLIE E. ROBERTSON No. 34360 STATE OF NEW YORK

WORTHINGTON, SKILLING, HELLE & JACKSON — Civil & Structural Engineers

PROJECT: THE WORLD TRADE CENTER | TITLE: CONNECTION DETAL 218A | DATE: 6-5-67

REVISIONS

8-14-67

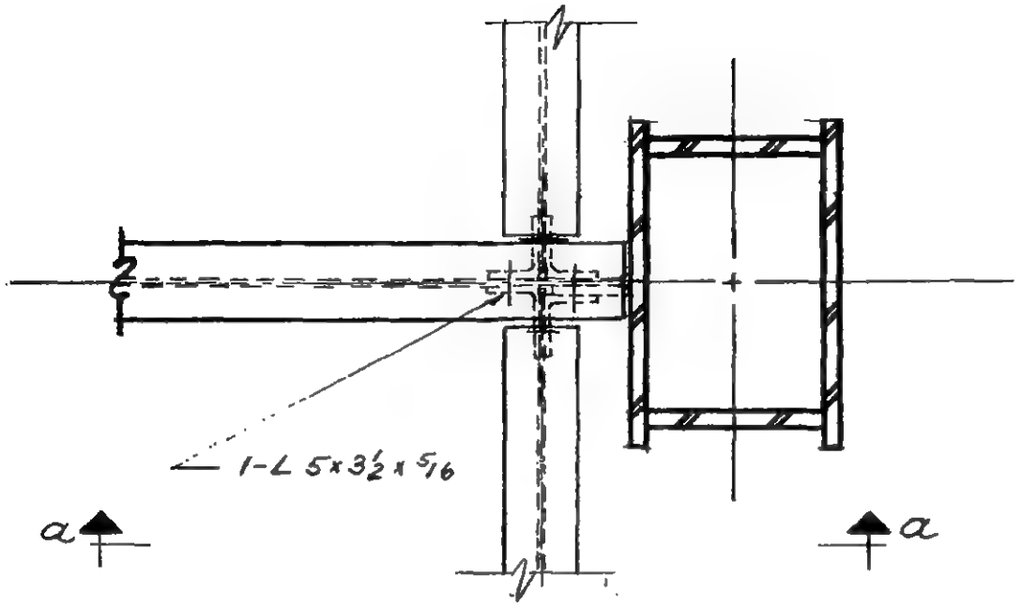

Plan

All L's 4x3½x5/16 x0'-5½ except as noted.

All bolts ¾"ϕ except as noted.

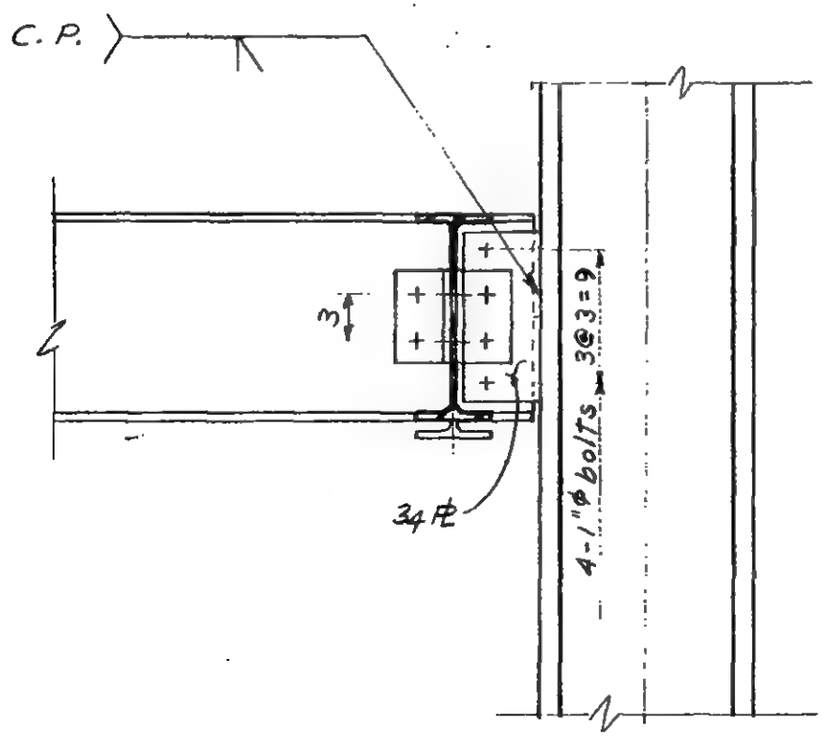

Section a-a

LICENSED PROFESSIONAL ENGINEER
LESLIE E. ROBERTSON
No. 34360
UNIVERSITY OF THE STATE OF NEW YORK

6-AB1-25

SKILLING - HELLE - CHRISTIANSEN - ROBERTSON Structural & Civil Engineers

PROJECT THE WORLD TRADE CENTER | TITLE CONNECTION DETAIL 218 B | DATE 10-2-67

REVISIONS

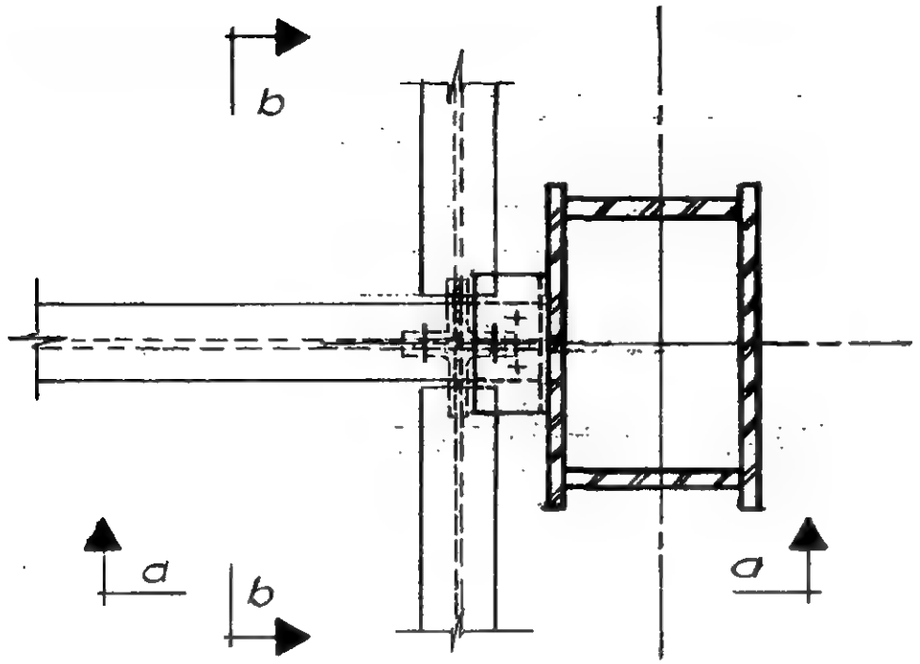

Plan

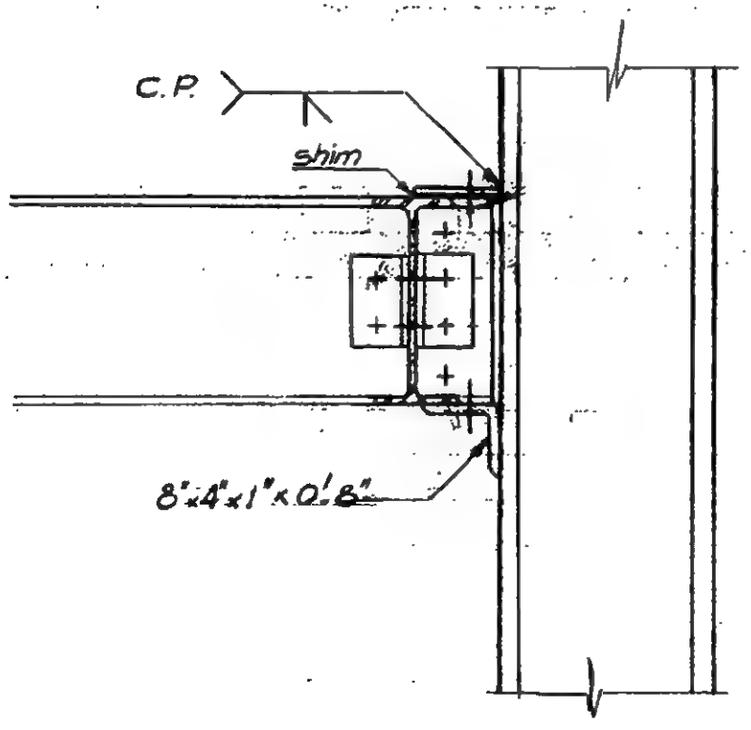

Section a-a

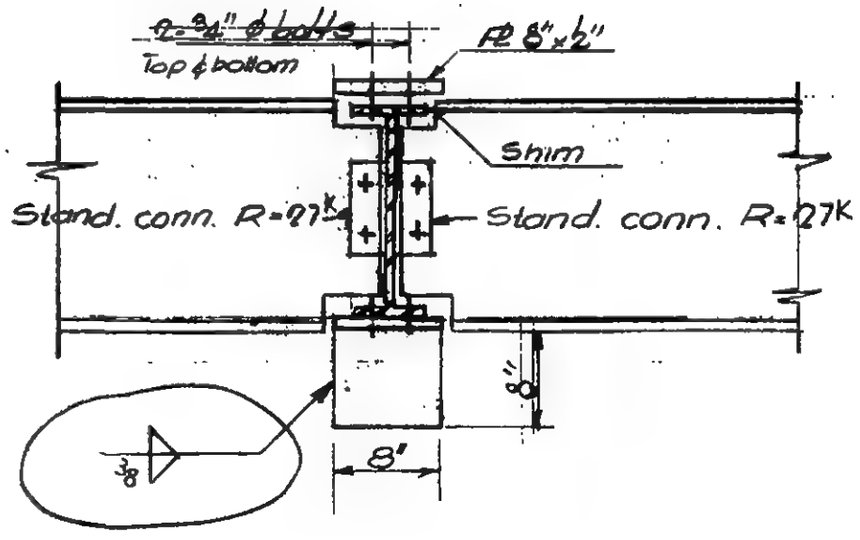

Section b-b

LICENSED PROFESSIONAL ENGINEER
LESLIE E. ROBERTSON
No. 34360
UNIVERSITY OF THE STATE OF NEW YORK

6-AB1-25.1

SKILLING - HELLE - CHRISTIANSEN - ROBERTSON Structural & Civil Engineers

PROJECT THE WORLD TRADE CENTER | TITLE CONNECTION DETAIL 218C | DATE 10-2-67

REVISIONS

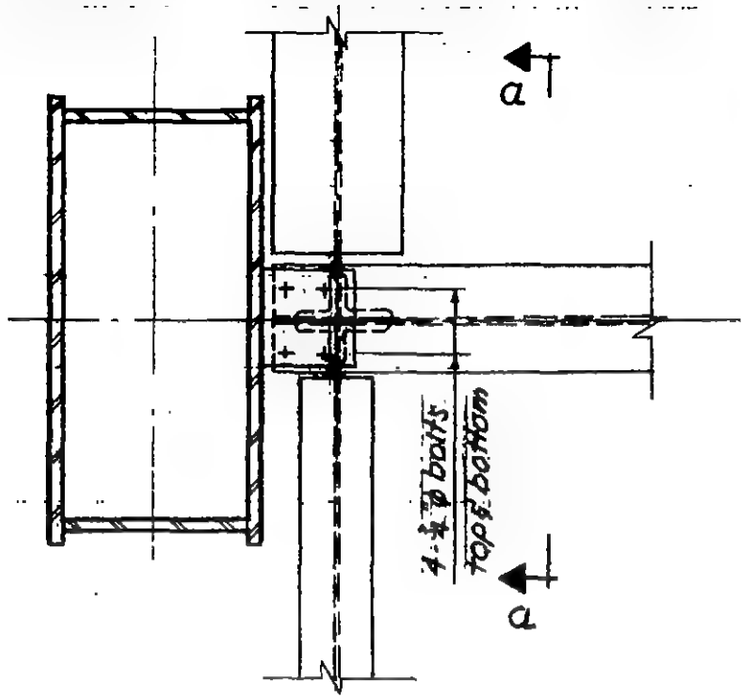

Plan

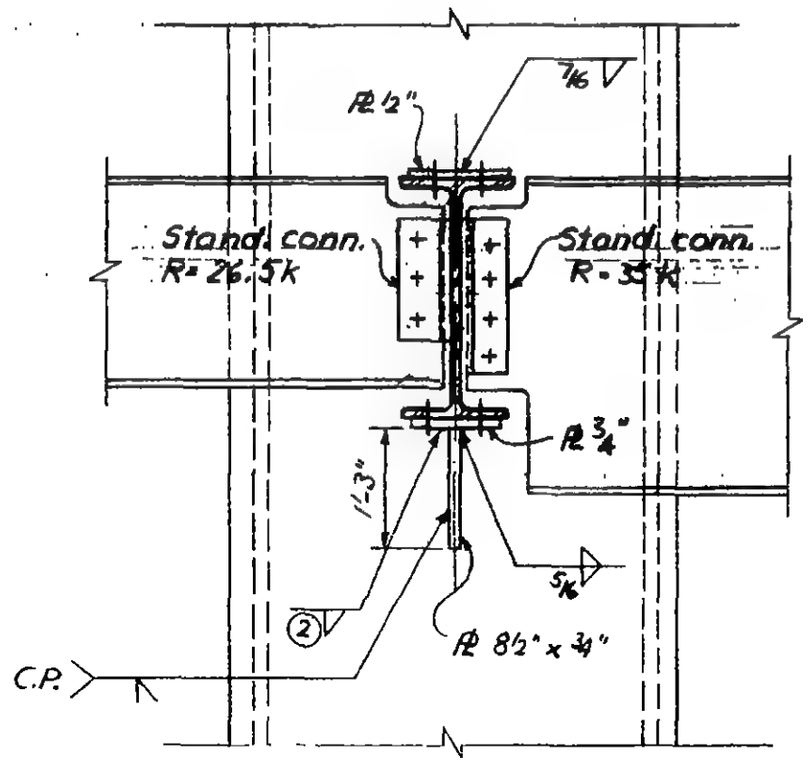

Section a-a

LICENSED PROFESSIONAL ENGINEER
LESLIE E. ROBERTSON
No. 34360
UNIVERSITY OF THE STATE OF NEW YORK

6-ABI-25.2

WORTHINGTON, SKILLING, HELLE & JACKSON — Civil & Structural Engineers

PROJECT: THE WORLD TRADE CENTER | TITLE: CONNECTION DETAIL 219 A-B | DATE: 6-5-67

REVISIONS

10-2-67

11-20-68

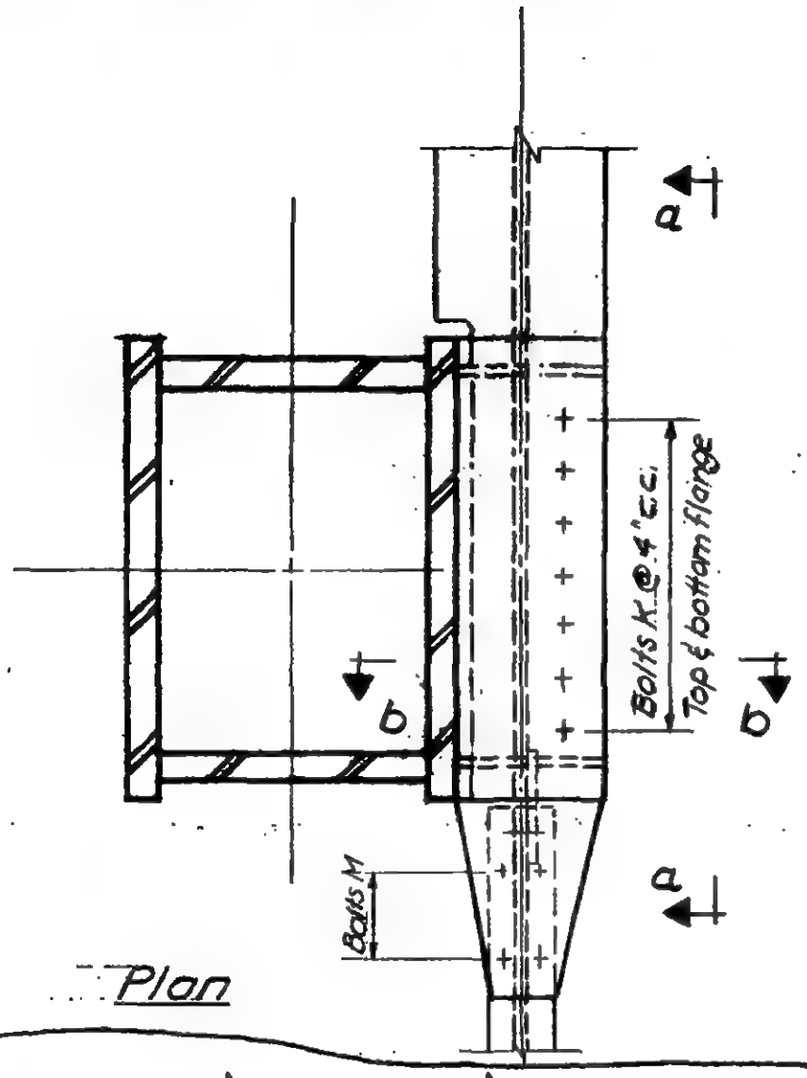

Plan

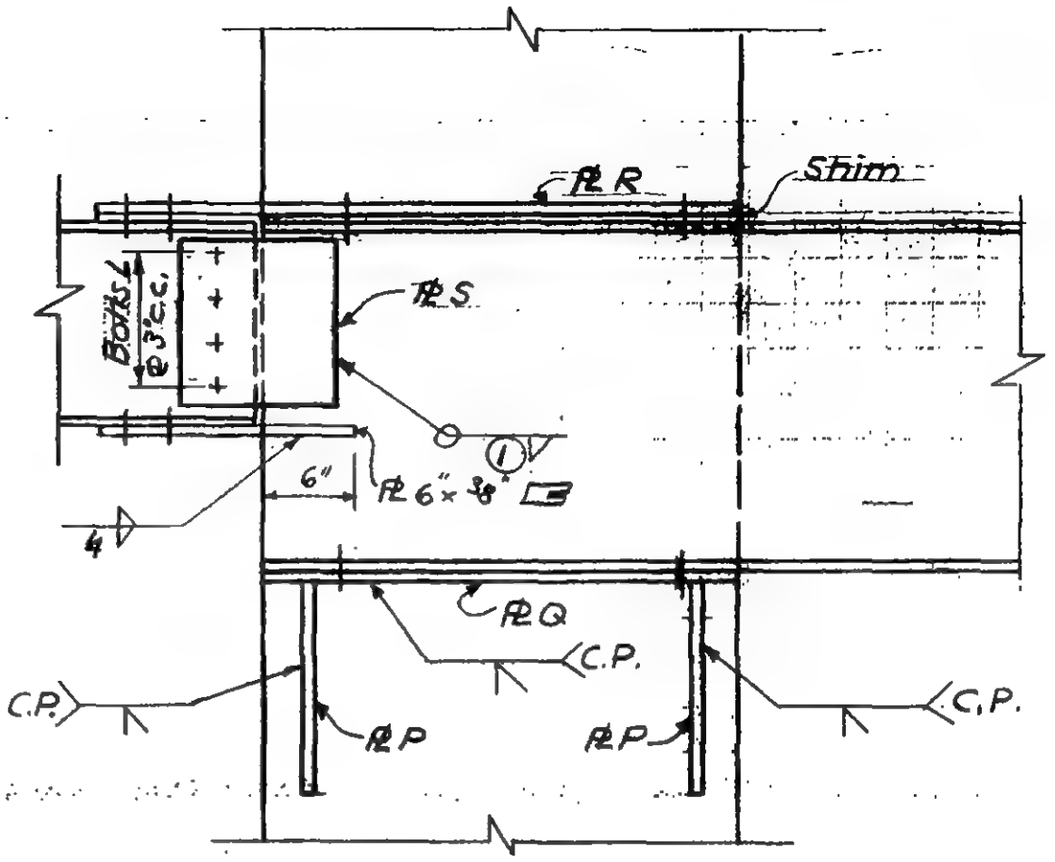

Section a-a

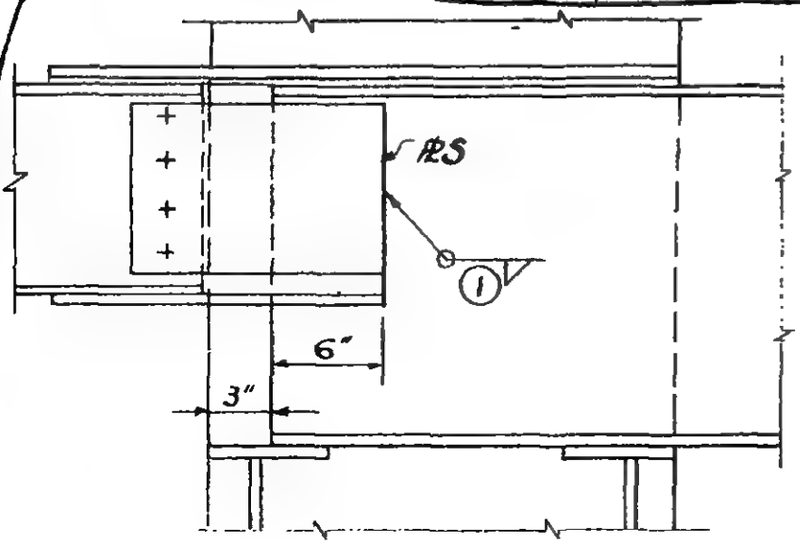

Section a-a

At Floor 75, Tower A, BM 5551 only

Details not shown are the same as shown in main Section a-a which is applicable to other floors.

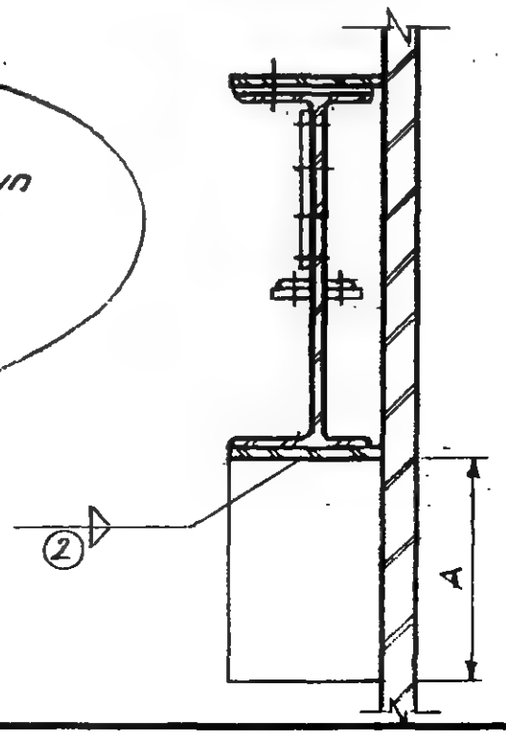

Section b-b

6-AB1-26

LICENSED PROFESSIONAL ENGINEER — LESLIE E. ROBERTSON — No. 34360 — UNIVERSITY OF THE STATE OF NEW YORK

SKILLING - HELLE - CHRISTIANSEN - ROBERTSON Structural & Civil Engineers

PROJECT THE WORLD TRADE CENTER | TITLE SCHEDULE FOR DETAIL 219 A & B | DATE 10-2-67

REVISIONS

	219 A	219 B
PLATES		
P	3/4"	7/8"
Q	5/8"	5/8"
R	1/2"	5/8"
S	1/2"	1/2"
DIMENSIONS		
A	1'-3"	1'-3"
BOLTS		
K	7 - 7/8" ϕ	7 - 7/8" ϕ
L	4 - 7/8" ϕ	4 - 7/8" ϕ
M	4 - 7/8" ϕ	4 - 7/8" ϕ
WELDS		
(1)	5/16	5/16
(2)	3/8	3/8

LICENSED PROFESSIONAL ENGINEER LESLIE E. ROBERTSON No. 34360 UNIVERSITY OF THE STATE OF NEW YORK

6-ABI-26.1

WORTHINGTON. SKILLING. HELLE & JACKSON — Civil & Structural Engineers

PROJECT THE WORLD TRADE CENTER | TITLE CONNECTION DETAIL 220 A,B,C | DATE 5-1-67

REVISIONS

6-30-67

7-28-67

9-15-67

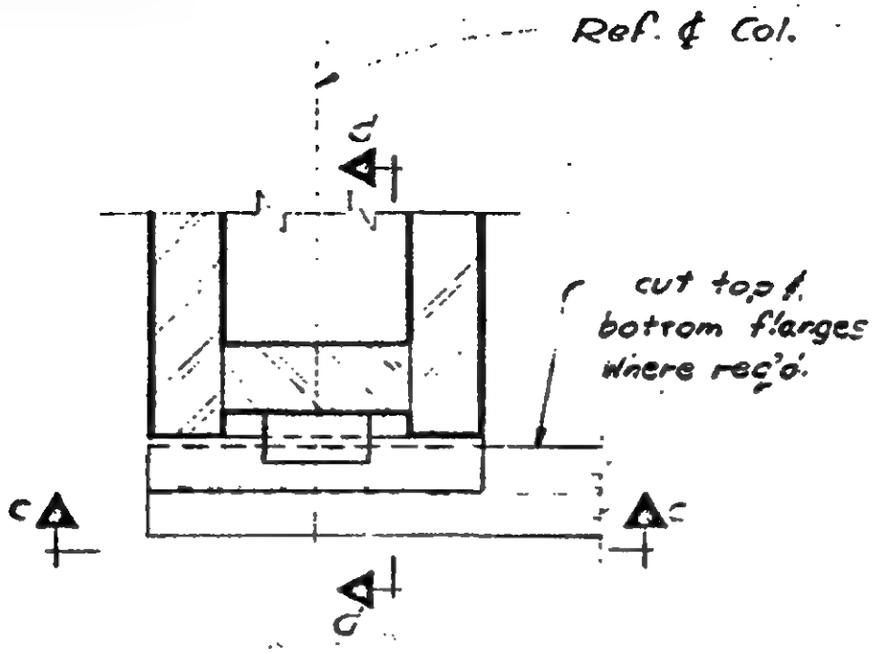

Plan a-c

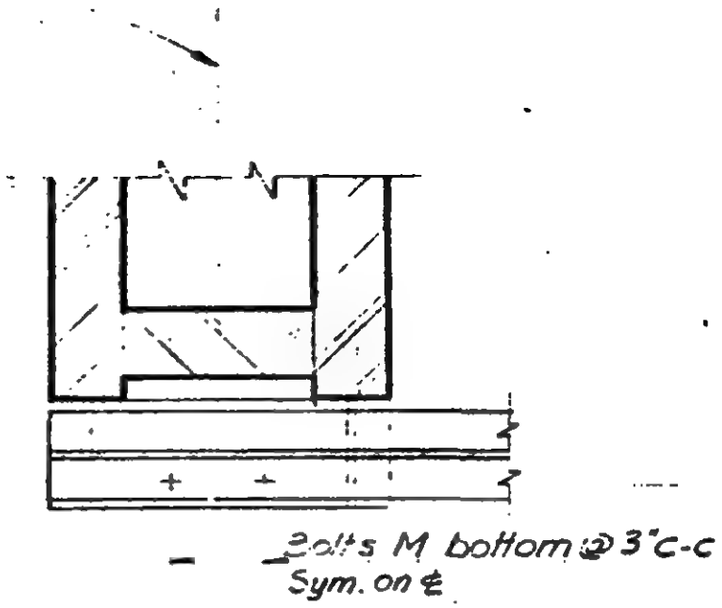

Plan b-b

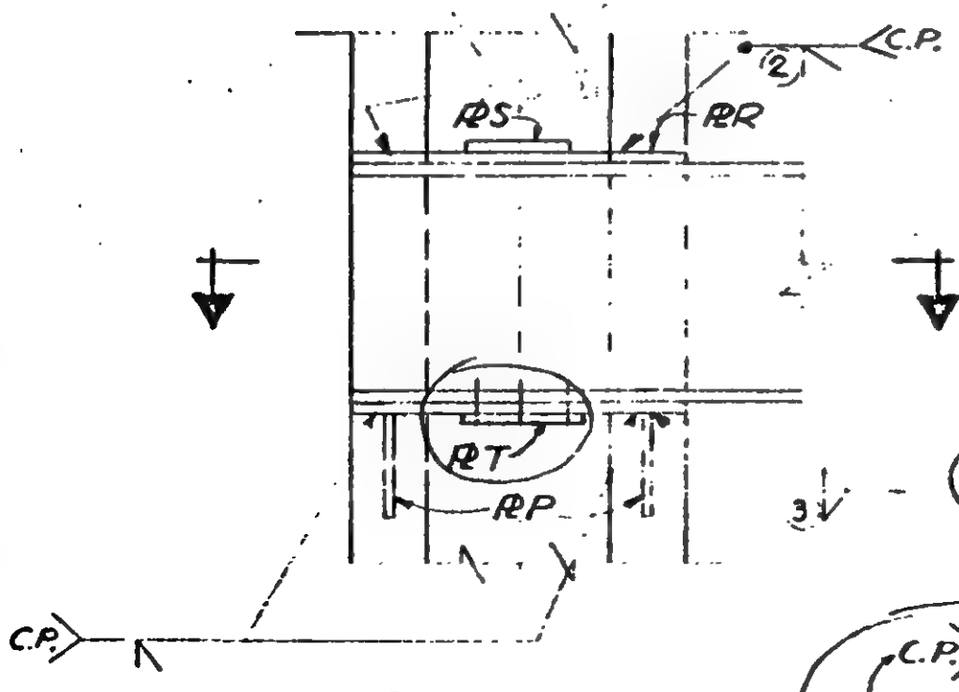

Section c-c

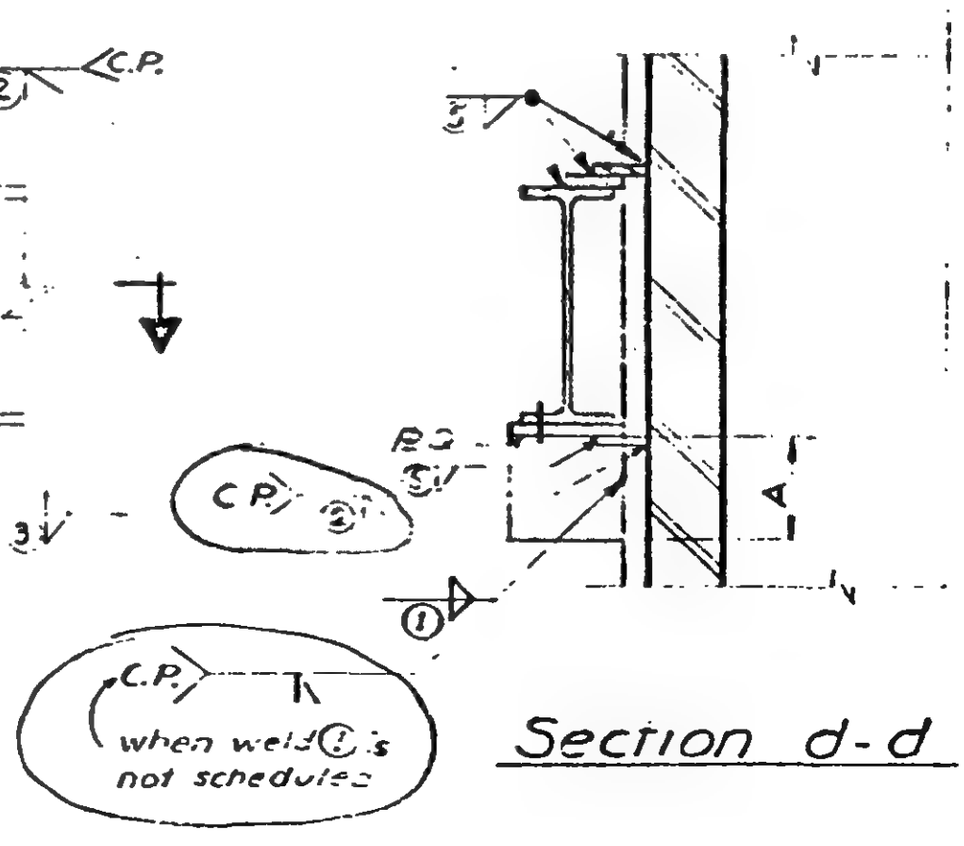

Section d-d

6-AB1-27

SKILLING - HELLE - CHRISTIANSEN - ROBERTSON Structural & Civil Engineers

PROJECT: THE WORLD TRADE CENTER | TITLE: SCHEDULE FOR DETAIL 220 A, B, C, D, E & F | DATE: 6-30-67

REVISIONS
7-28-67
9-15-67

REF. DWGS.	6-AB-27	6-AB1-27	6-AB1-27	6-AB1-27.2	6-AB1-27.2	6-AB1-27.2
	220 A	220 B	220 C	220 D	220 E	220 F
PLATES						
P	3/8"	3/8"	1/2"	3/8"	3/8"	5/8"
Q	3/8"	3/8"	1/2"	3/4"	3/4"	1/4"
R	3/8"	3/8"	1/2"	3/4"	3/4"	1/4"
S	3 x 5/16 x 0'-7"	3 x 5/16 x 0'-7"	3 x 5/16 x 0'-7"	—	—	1/4"
T	—	—	—	—	—	—
DIMENSIONS						
A	1'-0"	1'-7"	1'-6"	1'-0"	1'-0"	1'-4"
BOLTS						
K	—	—	—			—
M	4 - 3/4" ϕ (A325)	4 - 3/4" ϕ (A325)	4 - 3/4" ϕ (A325)	—	—	8 - 1" ϕ
WELDS						
①	3/8	3/8	1/2	—	—	—
②	C. P.	C. P.	C. P.	C. P.	C. P.	C. P.
③	5/16	5/16	5/16	5/16	5/16	5/16
④	—	—	—	C. P.	C. P.	C. P.
⑤	5/16	5/16	5/16	—	—	1
⑥	—	—	—	—	—	—

ENGINEER ROBERTSON No. 34360 STATE OF NEW YORK

6-AB1-27.1

WORTHINGTON, SKILLING, HELLE & JACKSON — Civil & Structural Engineers

PROJECT THE WORLD TRADE CENTER | TITLE [illegible] D, E, F, K, L, X, Y | DATE 7-28-67

REVISIONS
9-15-67
2-9-68

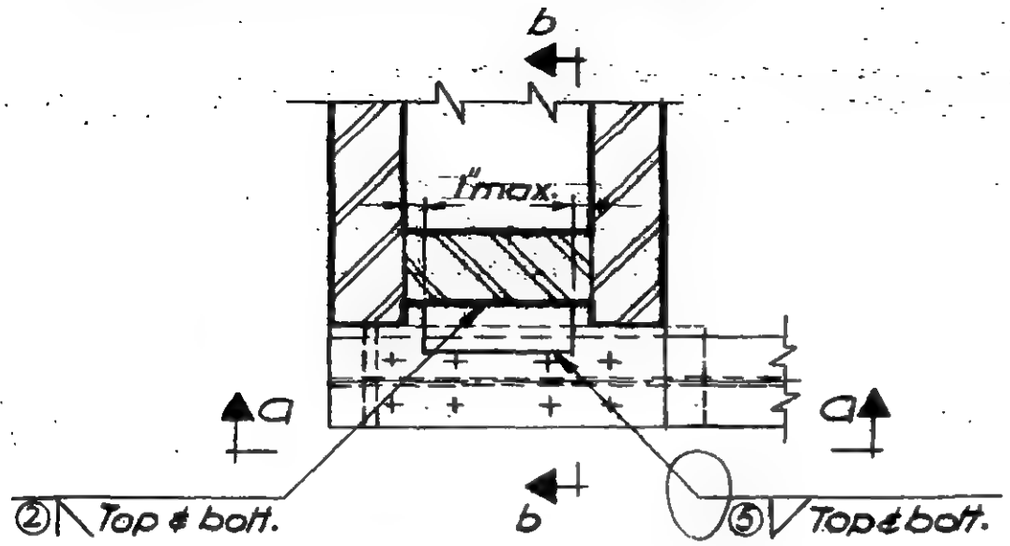

Plan
~~220 D, E, F, L~~, X, Y

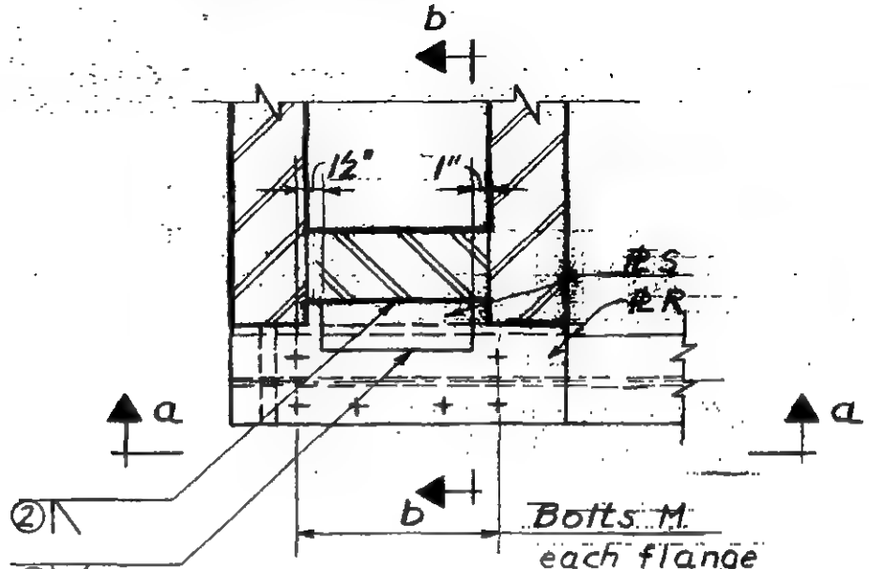

Plan
220 K

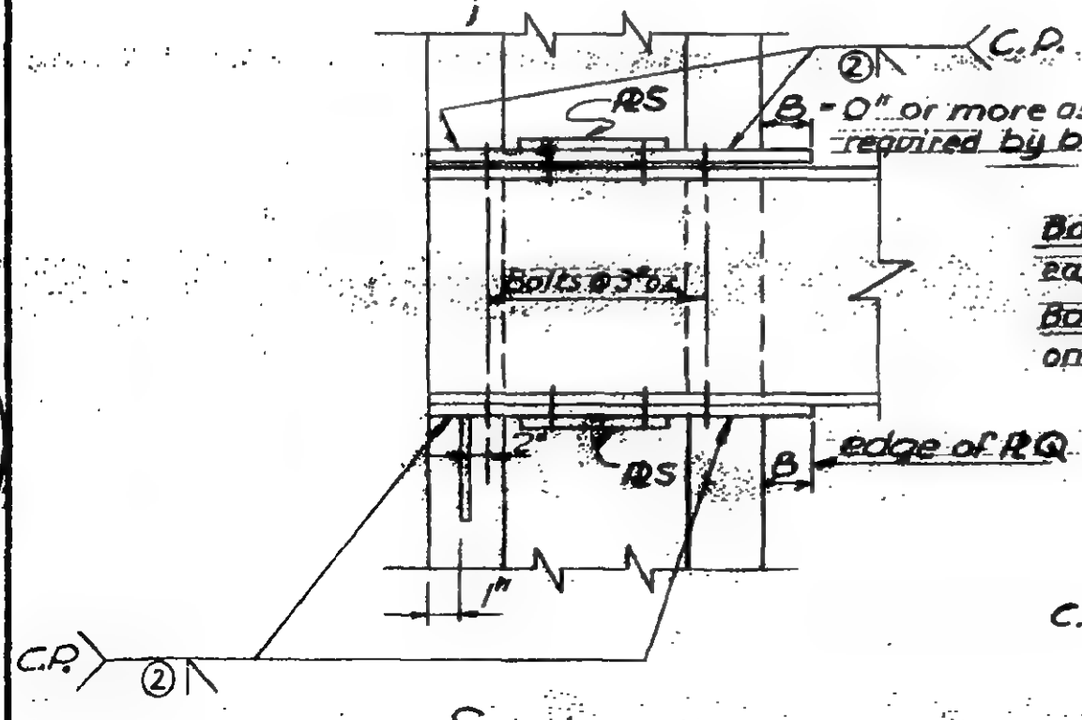

Section a-a

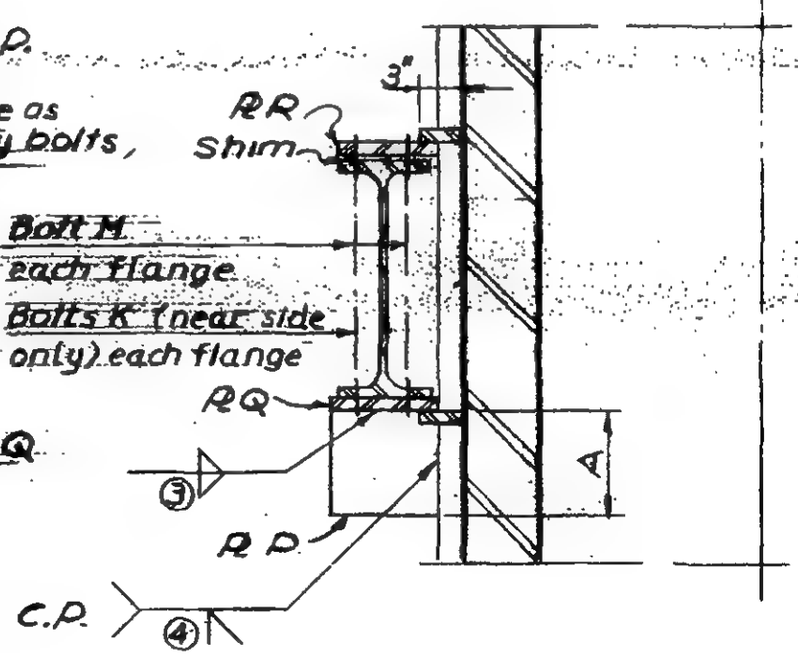

Section b-b

LICENSED PROFESSIONAL ENGINEER
LESLIE E. ROBERTSON
No. 34360
THE STATE OF NEW YORK

G-ABI-27.2

WORTHINGTON, SKILLING, HELLE & JACKSON — Civil & Structural Engineers

PROJECT: THE WORLD TRADE CENTER | TITLE: CONNECTION DETAIL 220 G,H,I,P,Q,S,T,U,W | DATE: 7-28-67

REVISIONS
9-15-67
10-2-67
10-31-67

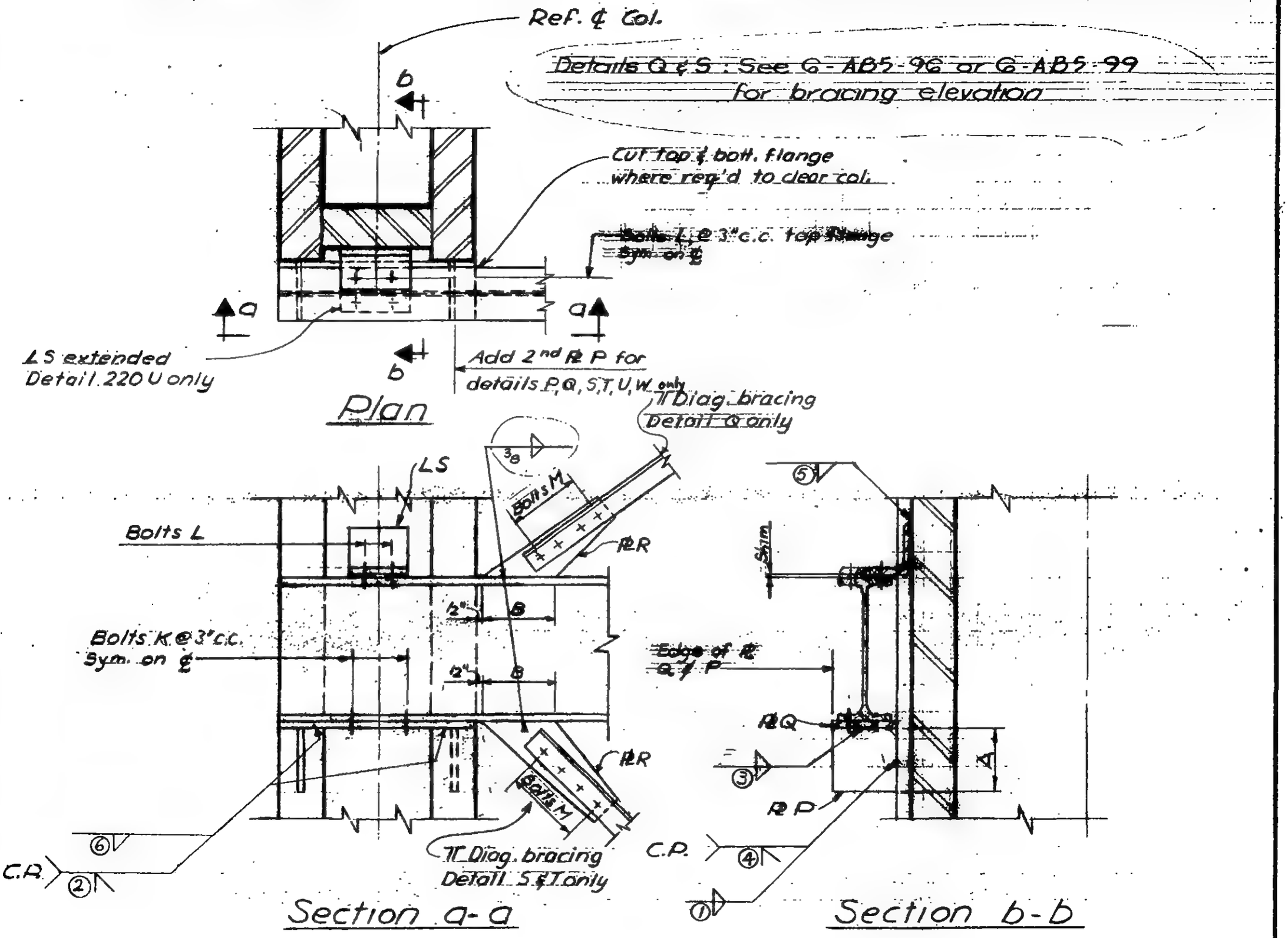

LICENSED PROFESSIONAL ENGINEER — LESLIE E. ROBERTSON — No. 34960 — STATE OF NEW YORK

6-AB1-27.3

WORTHINGTON, SKILLING, HELLE & JACKSON — Civil & Structural Engineers

PROJECT THE WORLD TRADE CENTER | TITLE CONNECTION DETAIL 220 J, M & N | DATE 7-26-67

REVISIONS
9-15-67
11-10-67

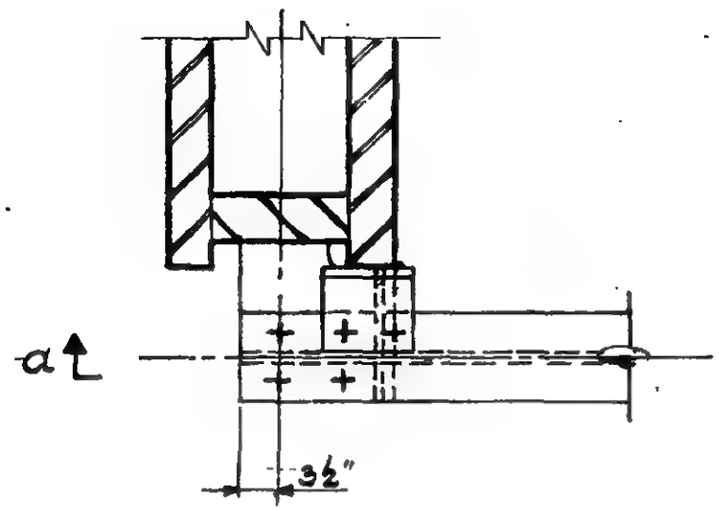

PLAN
Details 220 J & N

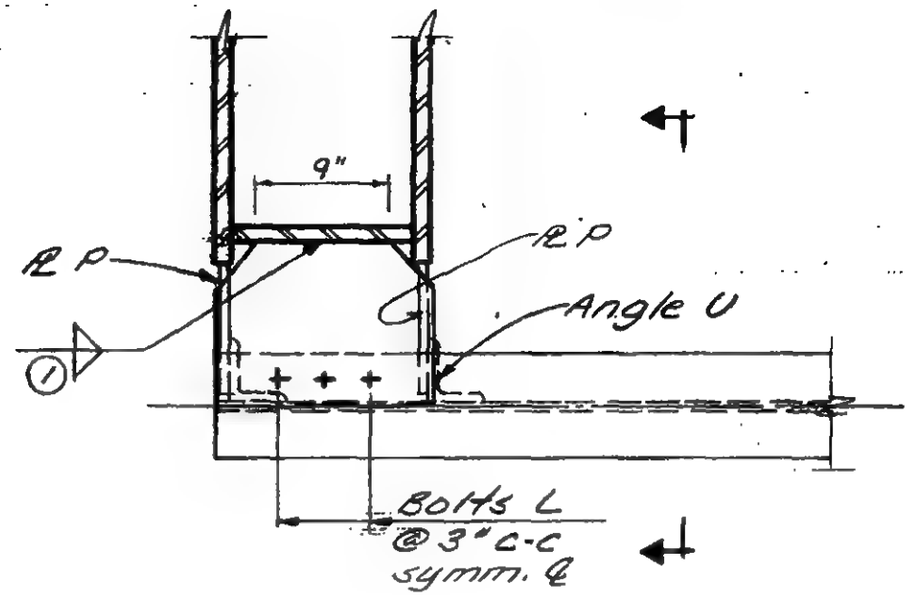

Plan
Detail 220 M

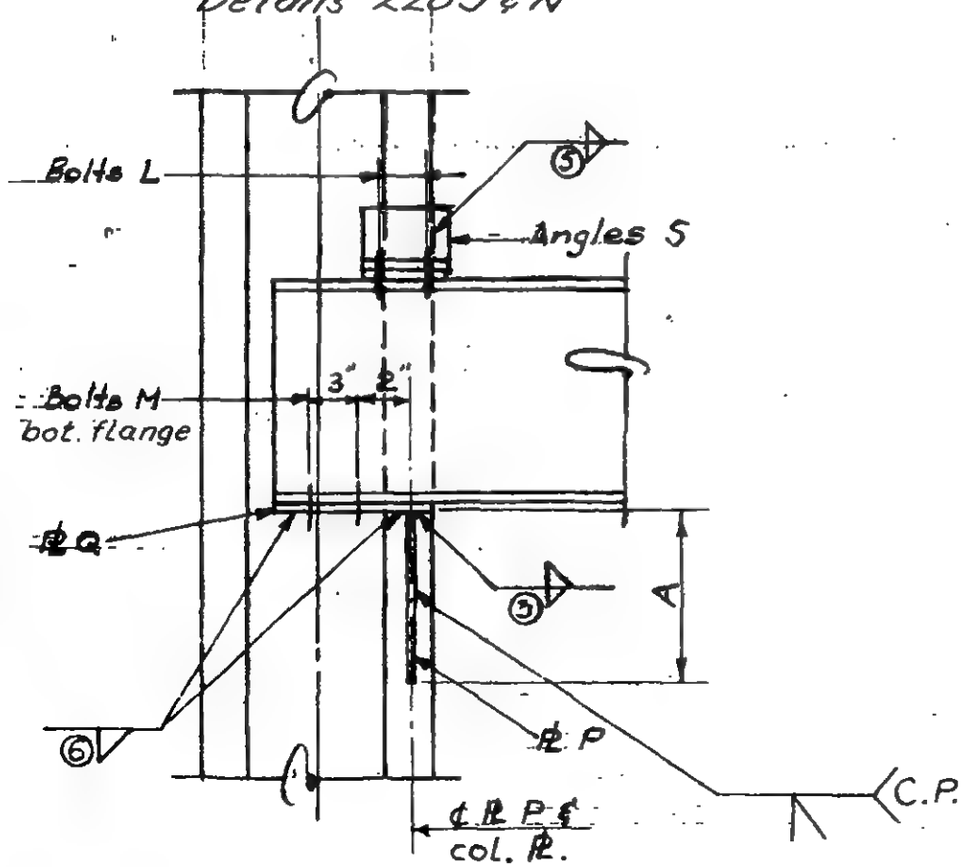

Section a-a

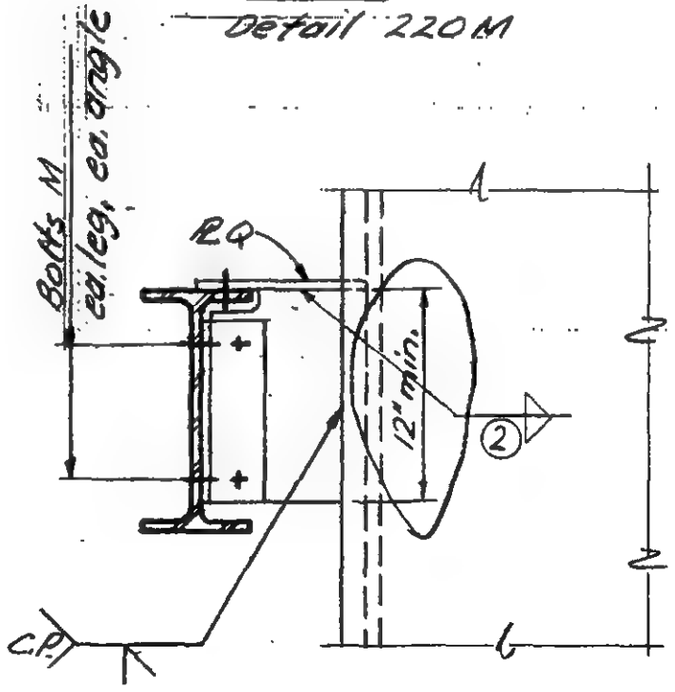

Section a-a

LICENSED PROFESSIONAL ENGINEER
LESLIE E. ROBERTSON
No. 34360
UNIVERSITY OF THE STATE OF NEW YORK

G-AB1-27.4

SKILLING - HELLE - CHRISTIANSEN - ROBERTSON Structural & Civil Engineers

PROJECT THE WORLD TRADE CENTER | TITLE SCHEDULE FOR DETAIL 220 G-L | DATE 7-28-67

REVISIONS

9-15-67

REF. DWGS.	6-AB1-27.3	6-AB1-27.3	6-AB1-27.3	6-AB1-27.4	6-AB1-27.2	6-AB1-27.2
	220 G	220 H	220 I	220 J	220 K	220 L
PLATES						
P	3/8"	5/8"	1/2"	1/2"	5/8"	5/8"
Q	5/8"	3/4"	1/2"	1/2"	7/8"	1"
R	—	—	—	—	7/8"	1"
S	—	—	—	—	3/4"	1/2"
DIMENSIONS						
A	1'-4"	1'-4"	1'-4"	1'-4"	1'-2"	1'-1"
ANGLES						
S	4 x 4 x 5/16	4 x 7 x 3/8	4 x 7 x 3/8	4 x 7 x 3/8	—	—
BOLTS						
K	3 - 3/4" ϕ	3 - 3/4" ϕ	3 - 3/4" ϕ	—	—	—
L	2 - 3/4" ϕ	2 - 3/4" ϕ	2 - 3/4" ϕ	2 - 3/4" ϕ	—	—
M	—	—	—	4 - 3/4" ϕ	6 - 1 1/8" ϕ	8 - 3/4" ϕ
WELDS						
①	—	—	—	—	—	—
②	—	—	—	—	C.P.	C.P.
③	1/4	1/4	1/4	5/16	5/16	5/16
④	C.P.	C.P.	C.P.	C.P.	C.P.	C.P.
⑤	1/4	5/16	5/16	3/8	5/8	7/16
⑥	1/2	1/2	1/2	1/2	—	—

6-AB1-27.5

ENGINEER ... RTSON No. 34360 ... UNIVERSITY OF THE STATE OF NEW YORK

SKILLING - HELLE - CHRISTIANSEN - ROBERTSON Structural & Civil Engineers

PROJECT THE WORLD TRADE CENTER | TITLE SCHEDULE FOR DETAIL 220 M, N, P, Q, R, S | DATE 9-15-67

REVISIONS
10-2-67
10-31-67
11-10-67

REF. DWGS.	6-AB1-27.4	6-AB1-27.4	6-AB1-27.3	6-AB1-27-3	6-AB1-27.7	6-AB1-27.3
	220M	220N	220P	220Q	220R	220S
PLATES						
P	1/2"	3/4"	5/8"	3/4"	5/8"	1/2"
Q	3/8"	3/4"	5/8"	3/4"	3/4"	1/2"
R	—	—	—	5/8"	3/4"	5/8"
S	—	—	—	—	5/8"	—
T	—	—	—	—	4"x3/4"	—
DIMENSIONS						
A	—	1'-2"	1'-2"	1'-4"	1'-2"	1'-1"
B	—	—	—	0'-9" min.	0'-9" min.	0'-9" min.
ANGLES						
S	—	4x4x3/8	6x4x7/16	8x4x7/16x0'-6"	—	6x4x3/8x0'-6"
U	4x3 1/2x5/16	—	—	—	—	—
BOLTS						
K	—	—	4-3/4"ϕ	4-3/4"ϕ	6-1 1/8"ϕ(A490)	4-3/4"ϕ
L	3-3/4"ϕ	2-3/4"ϕ	2-3/4"ϕ	2-3/4"ϕ	4-7/8"ϕ	2-3/4"ϕ
M	4-3/4"ϕ	3-7/8"ϕ	—	4-7/8"ϕ	—	4-7/8"ϕ
WELDS						
①	5/16	—	—	—	5/16	—
②	5/16	—	C.P.	C.P.	5/8	C.P.
③	—	5/16	5/16	5/16	3/8	5/16	
④	—	—	C.P.	C.P.	—	C.P.
⑤	—	5/16	5/16	5/16	—	5/16
⑥	—	5/16	—	—	—	—

S-AB1-27.6

SKILLING - HELLE - CHRISTIANSEN - ROBERTSON Structural & Civil Engineers

PROJECT THE WORLD TRADE CENTER | TITLE CONNECTION DETAIL 220R, V | DATE 10-2-67

REVISIONS

10-31-67

Detail 220 R & V : See 6-AB5-96 for bracing elevation

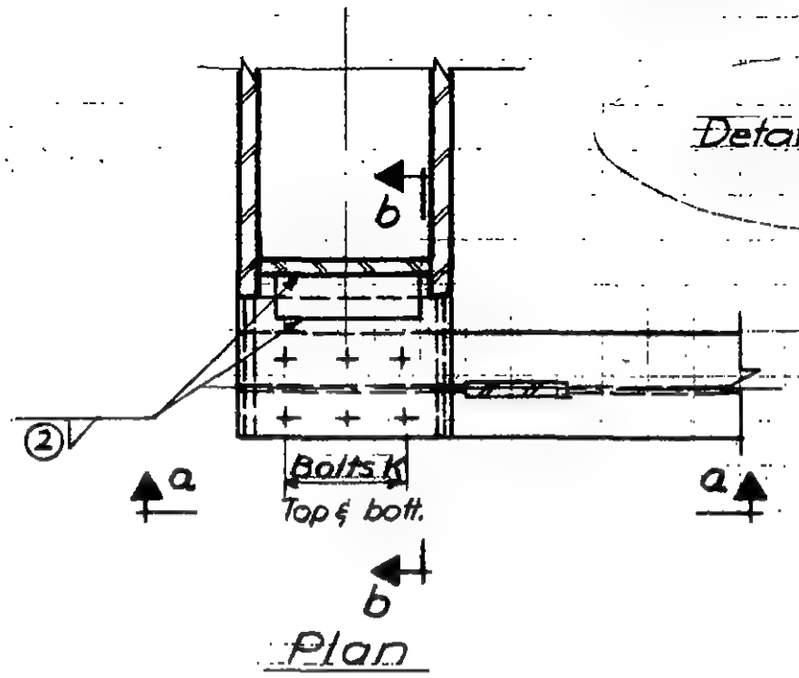

Plan

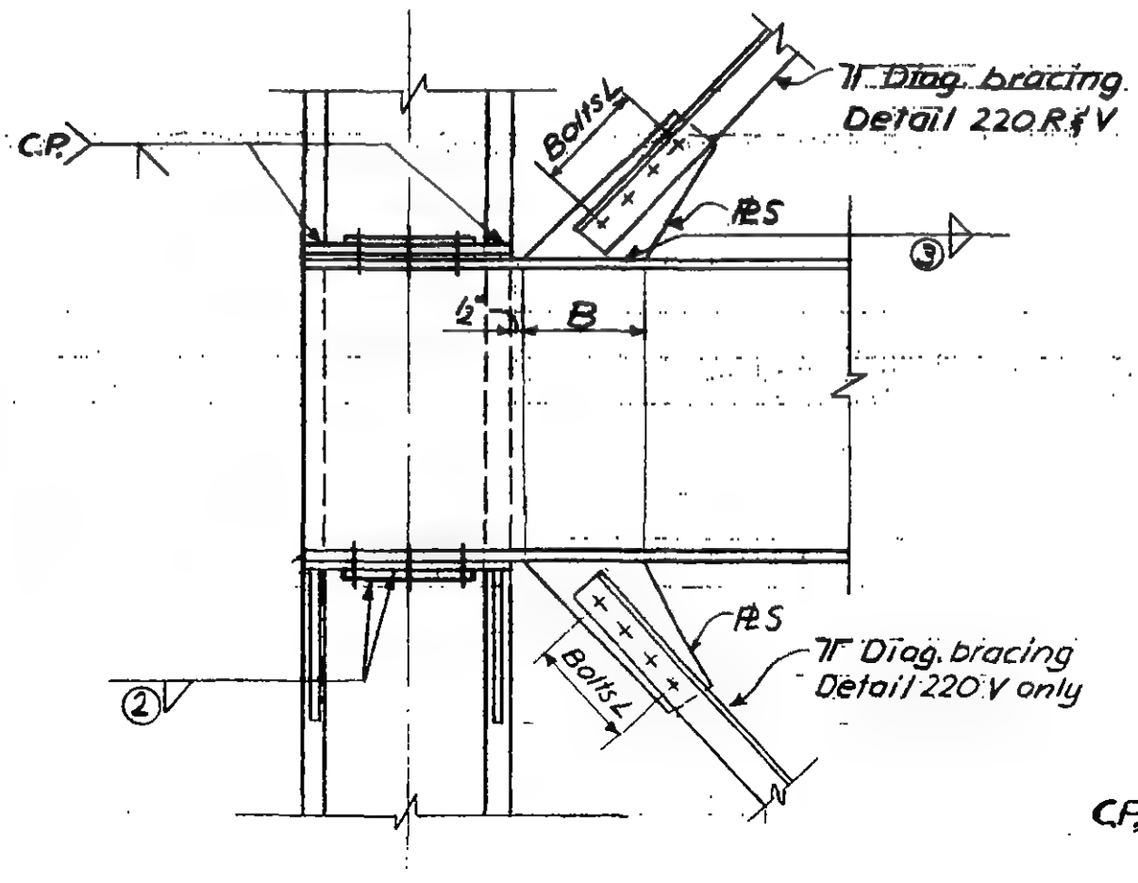

Section a-a

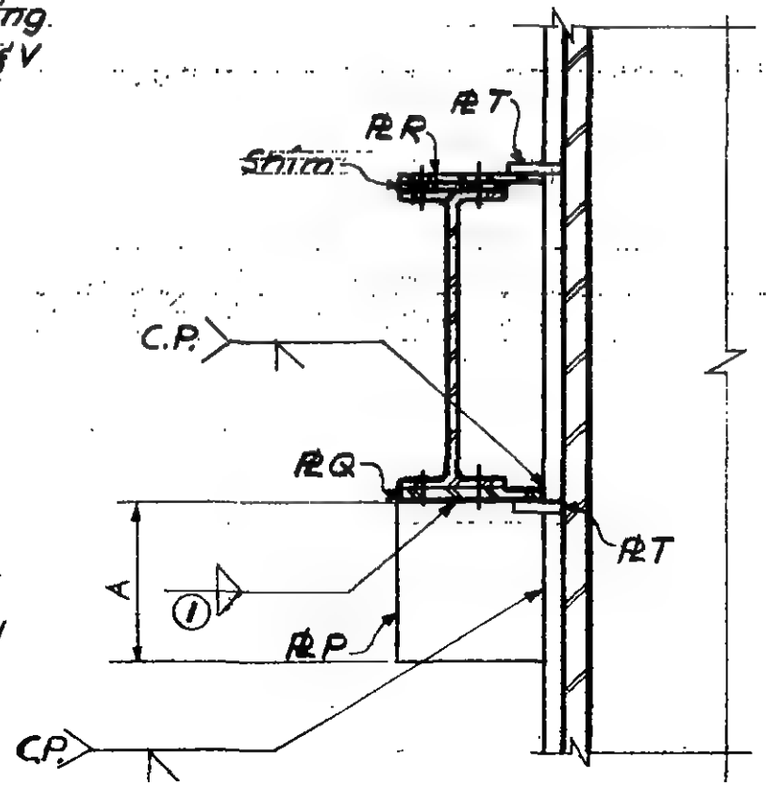

Section b-b

6-AB1-27.7

REGISTERED PROFESSIONAL ENGINEER
LESLIE E. ROBERTSON
No. 34980
STATE OF NEW YORK

SKILLING - HELLE - CHRISTIANSEN - ROBERTSON Structural & Civil Engineers

PROJECT THE WORLD TRADE CENTER | TITLE SCHEDULE FOR DETAIL 220 T, U, V, W, X, Y | DATE 10-2-67

REVISIONS

10-31-67

2-9-68

REF. DWGS.	6-ABI-27.3	6-ABI-27.3	6-ABI-27.7	6-ABI-27.3	6-ABI-27.2	6-ABI-27.2
	220 T	220 U	220 V	220 W	220 X	220 Y
PLATES						
P	5/8"	5/8"	5/8"	3/4"	7/8	1"
Q	5/8"	5/8"	3/4"	3/4"	7/8	1"
R	5/8"	—	3/4"	—	7/8	3/4"
S	—	—	5/8"	—	4 x 5/8	3/4"
T	—	—	4" x 5/8"	—	—	—
ANGLES						
S	6 x 4 x 3/8 x 0'-6"	7 x 4 x 3/8 x 0'-6"	—	6 x 4 x 3/8 x 0'-6"	—	—
DIMENSIONS						
A	1'-0"	0'-10"	1'-2"	1'-1"	1'-2"	1'-4"
B	0'-8"	—	0'-9" min.	—	—	—
BOLTS						
K	4 - 3/4" ϕ	4 - 3/4" ϕ	6 - 7/8" ϕ	4 - 3/4" ϕ	4 - 1" ϕ	—
L	2 - 3/4" ϕ	2 - 3/4" ϕ	4 - 7/8" ϕ	2 - 3/4" ϕ	2 - 1" ϕ	—
M	4 - 3/4" ϕ	—	—	—	—	10 - 1 1/8" ϕ
WELDS						
①	—	—	5/16	—	—	—
②	C.P.	C.P.	9/16	C.P.	C.P.	C.P.
③	5/16	5/16	3/8	3/8	3/8	3/8
④	C.P.	C.P.	—	C.P.	C.P.	C.P.
⑤	5/16	5/16	—	5/16	5/16	3/4
⑥	—	—	—	—	—	—

LICENSED PROFESSIONAL ENGINEER LESLIE E. ROBERTSON No. 34360 UNIVERSITY OF THE STATE OF NEW YORK

6-ABI-27.8

SKILLING - HELLE - CHRISTIANSEN - ROBERTSON Structural & Civil Engineers

PROJECT THE WORLD TRADE CENTER | TITLE CONNECTION DETAIL 221A | DATE 6-5-67

REVISIONS

10-2-67

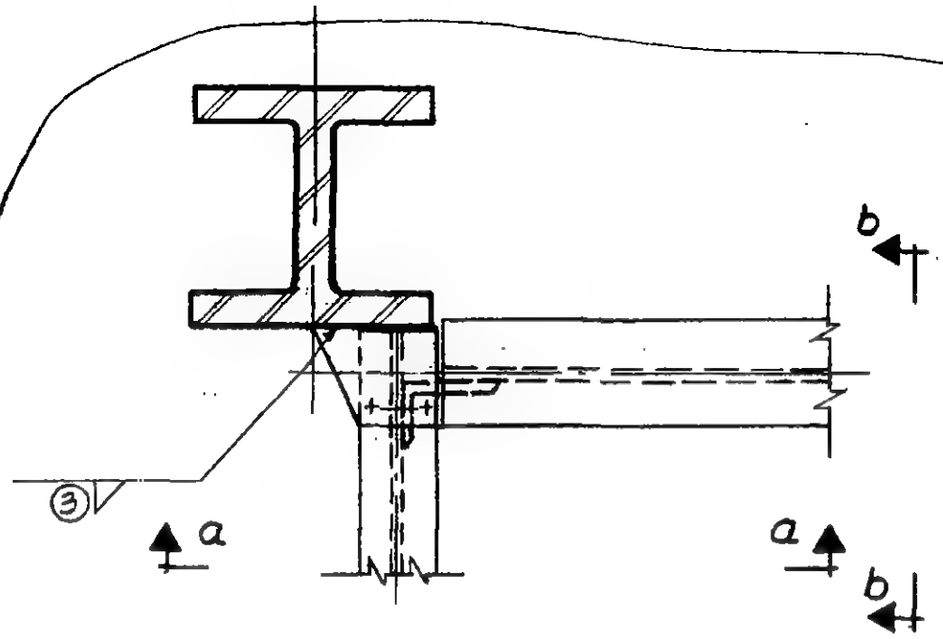

Plan

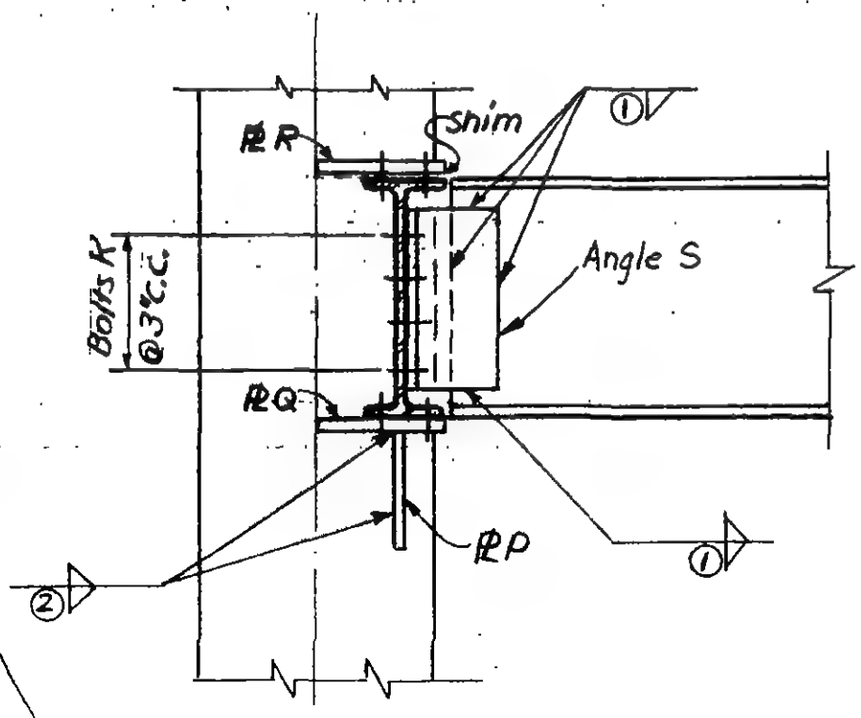

Section a-a

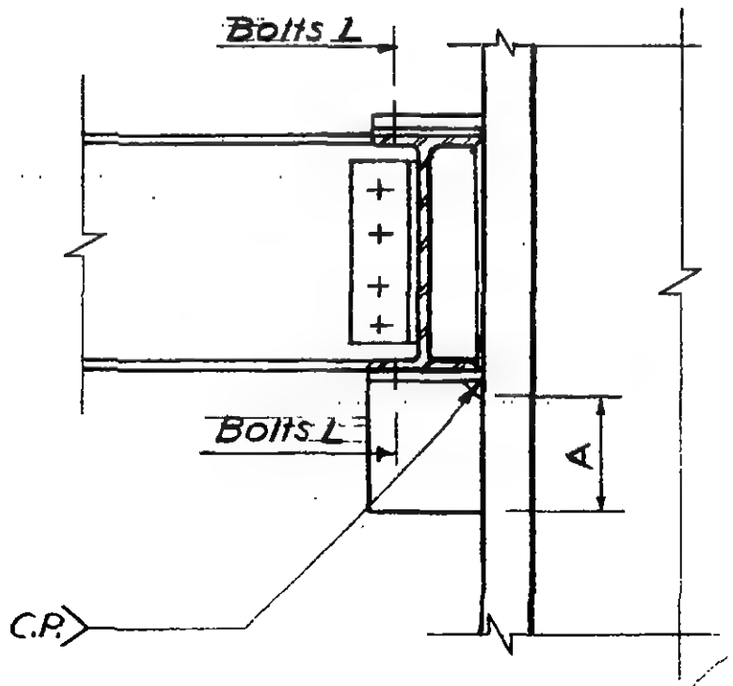

Section b-b

6-AB1-28

LESLIE E. ROBERTSON
No. 34360
UNIVERSITY OF THE STATE OF NEW YORK

SKILLING - HELLE - CHRISTIANSEN - ROBERTSON Structural & Civil Engineers

PROJECT THE WORLD TRADE CENTER | TITLE SCHEDULE FOR DETAIL 221 A | DATE 10-2-67

REVISIONS

	221 A					
PLATES						
P	9 x 11/16					
Q	11/16					
R	1/2					
ANGLES						
S	6 x 4 x 7/16 x 1'-0"					
DIMENSIONS						
A	1'-2"					
BOLTS						
K	4 - 7/8" ϕ					
L	2 - 7/8" ϕ					
WELDS						
①	3/8					
②	1/2					
③	3/8					

LICENSED PROFESSIONAL ENGINEER LESLIE E. ROBERTSON No. 34360 UNIVERSITY OF THE STATE OF NEW YORK

6-ABI-28.1

WORTHINGTON, SKILLING, HELLE & JACKSON — Civil & Structural Engineers

PROJECT THE WORLD TRADE CENTER | TITLE CONNECTION DETAIL 222 A, B | DATE 6-30-67

REVISIONS

7-28-67

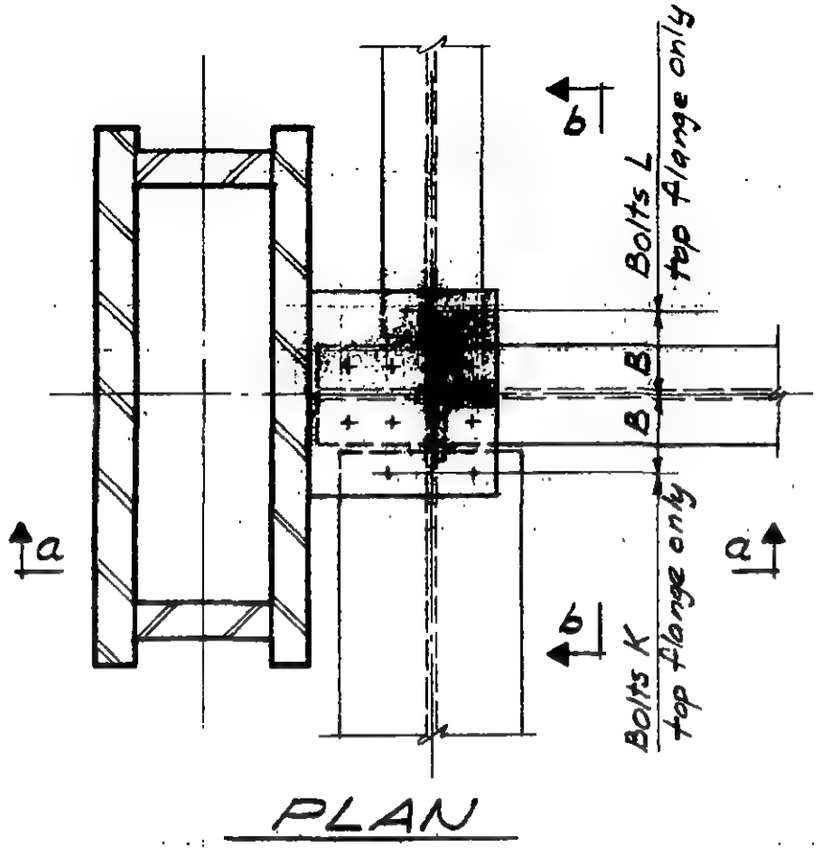

PLAN

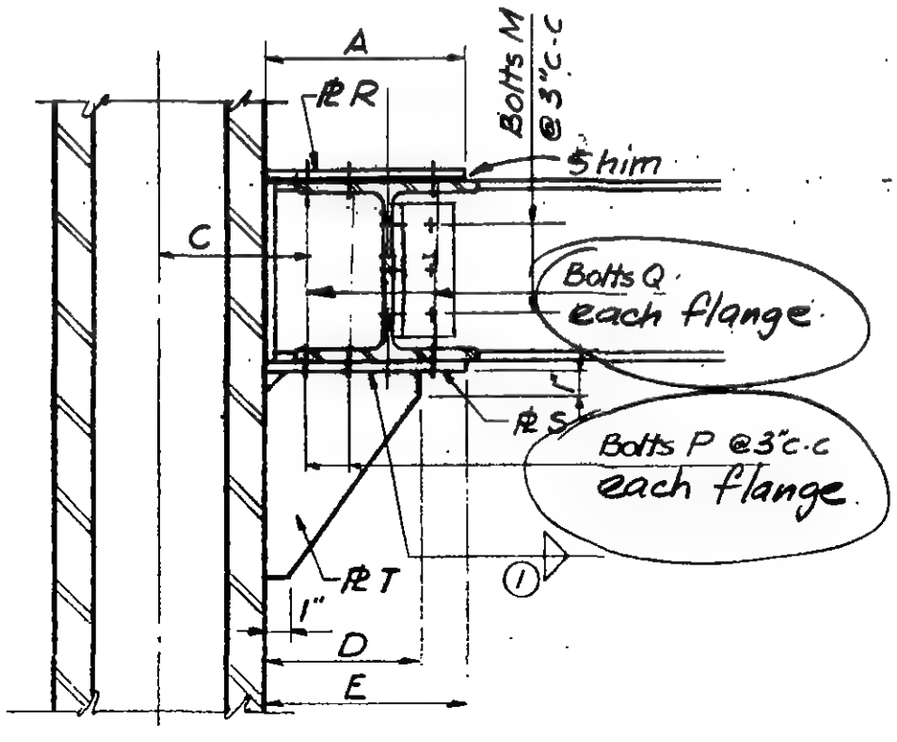

SECTION a-a

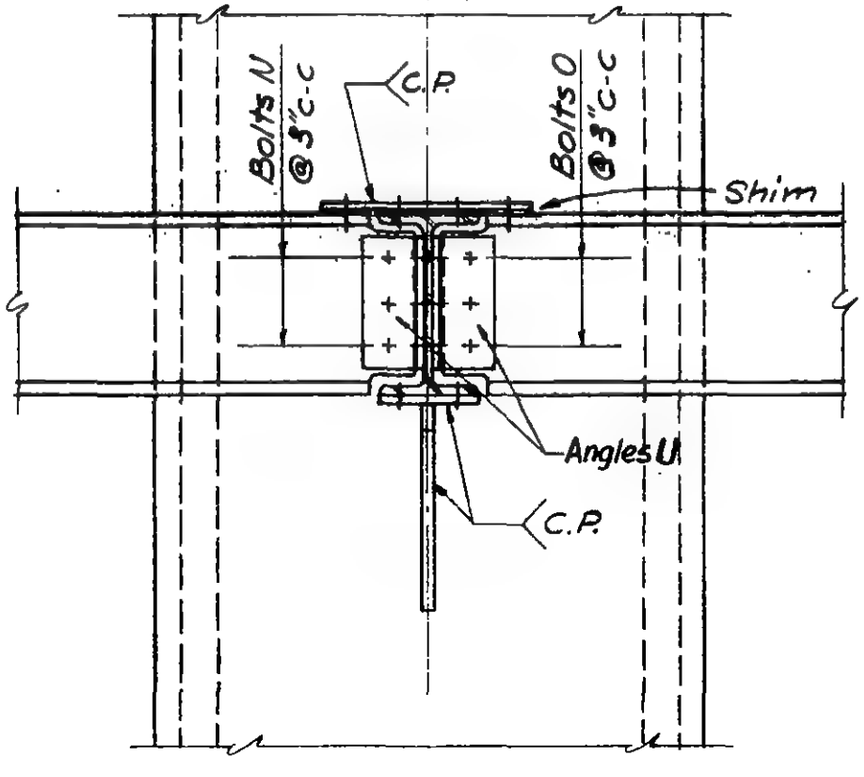

SECTION b-b

LICENSED PROFESSIONAL ENGINEER
LESLIE E. ROBERTSON
No. 34360
UNIVERSITY OF THE STATE OF NEW YORK

6-AB1-29

SKILLING - HELLE - CHRISTIANSEN - ROBERTSON Structural & Civil Engineers

PROJECT THE WORLD TRADE CENTER | TITLE SCHEDULE FOR DETAIL 222 A, B | DATE 6-30-67

REVISIONS

7-28-67

	222 A	222 B				
PLATES						
R	13½" x 5/8"	14½" x 5/8"				
S	6½" x 5/8"	7" x 5/8"				
T	15" x ½"	15" x ½"				
ANGLES						
U	4 x 4 x 7/16 x 0'-9"	4 x 4 x 3/8 x 0'-9"				
DIMENSIONS						
A	1'-0¾"	0'-9¼"				
B	0'-5¼"	0'-5½"				
C	0'-10"	0'-10"				
D	0'-10"	0'-7½"				
E	0'-10"	0'-10"				
BOLTS						
K	2 - 7/8" ϕ (A325)	2 - 1" ϕ (A325)				
L	2 - 7/8" ϕ (A325)	2 - 1" ϕ (A325)				
M	3 - 1" ϕ (A325)	3 - 7/8" ϕ (A325)				
N	3 - 1" ϕ (A325)	3 - 7/8" ϕ (A325)				
O	3 - 1" ϕ (A325)	3 - ¾" ϕ (A325)				
P	4 - 1" ϕ (A325)	—				
Q	—	4 - 1" ϕ (A325)				
WELDS						
①	5/16	5/16				

6-AB1-29.1

WORTHINGTON, SKILLING, HELLE & JACKSON — Civil & Structural Engineers

PROJECT: THE WORLD TRADE CENTER | TITLE: CONNECTION DETAIL 224 A B & C | DATE: 6-30-67

REVISIONS

10-5-67

12-21-67

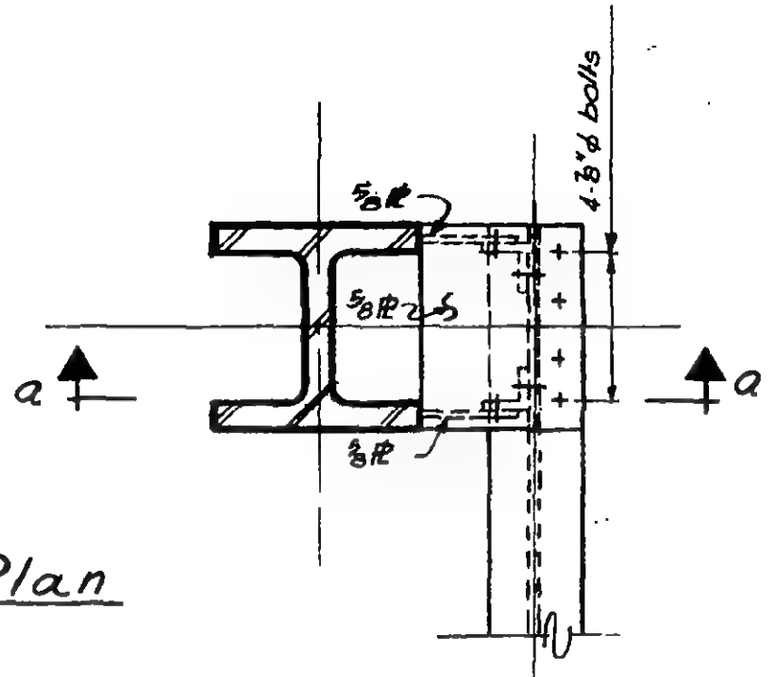

Plan

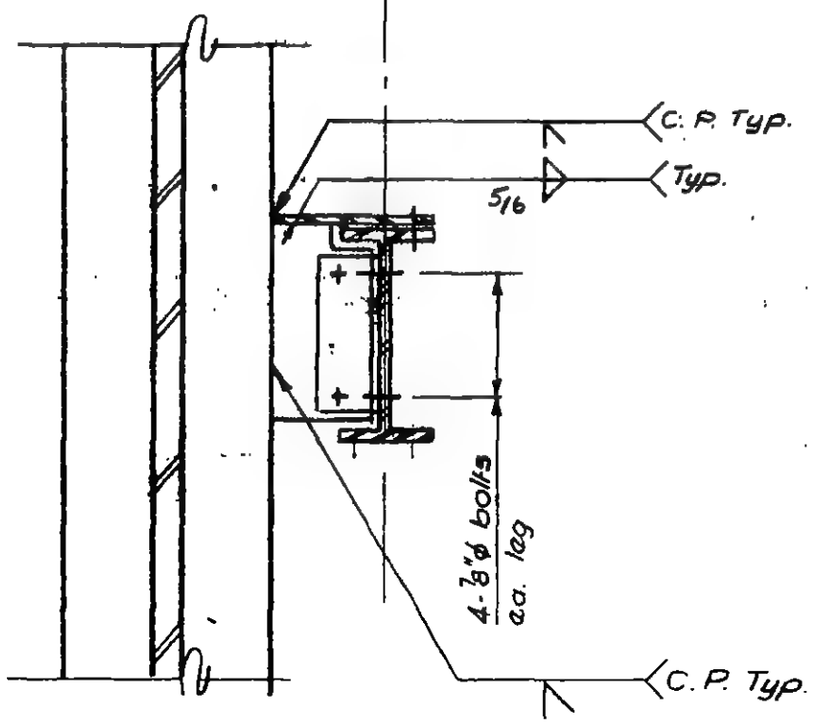

Section a-a

Detail 224 A

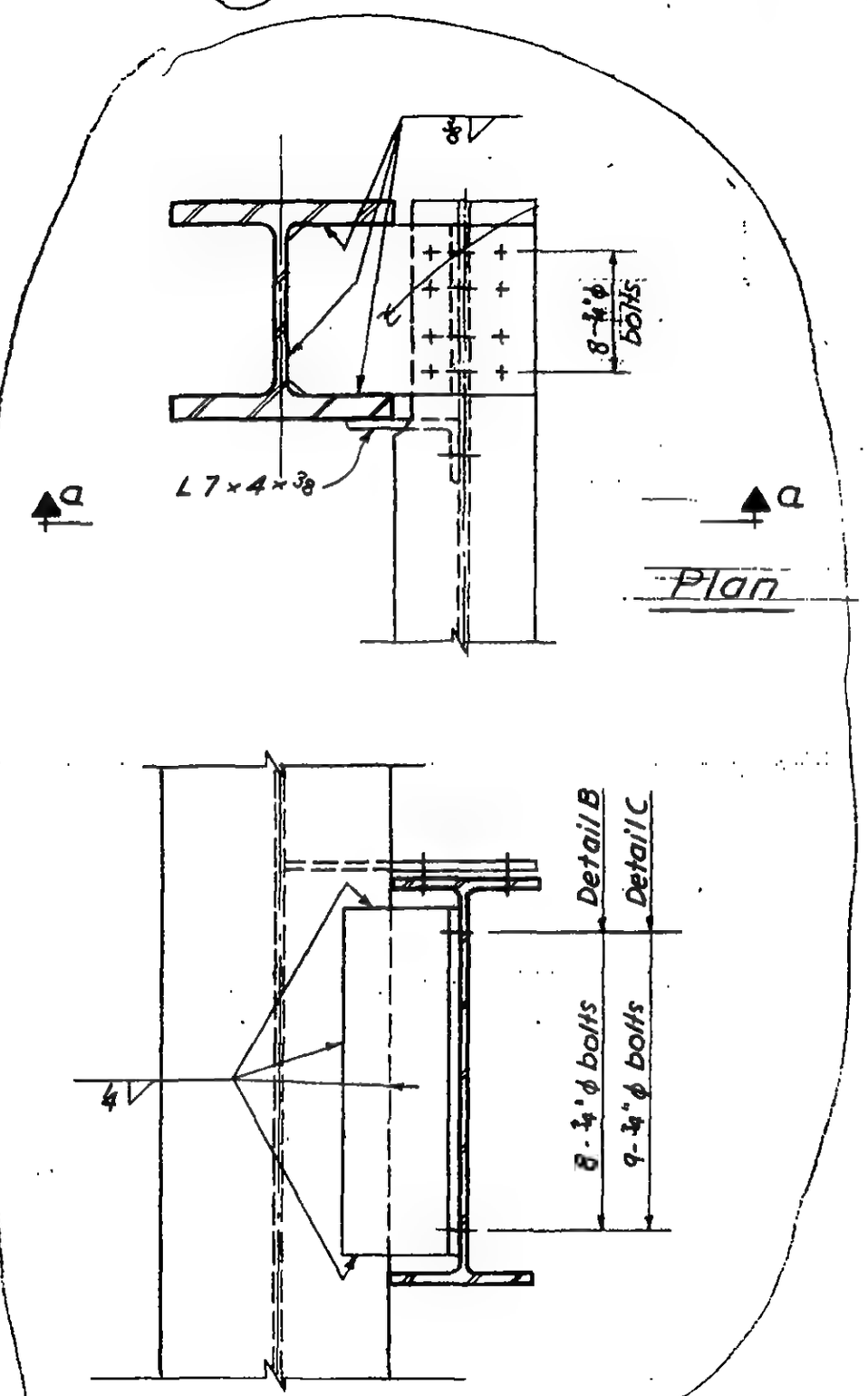

Section a-a

Detail 224 B & C

6-AB1-31

LICENSED PROFESSIONAL ENGINEER
LESLIE E. ROBERTSON
No. 34360
LICENSED BY THE STATE OF NEW YORK

WORTHINGTON, SKILLING, HELLE & JACKSON — Civil & Structural Engineers

PROJECT THE WORLD TRADE CENTER | TITLE CONNECTION DETAIL 225 A | DATE 7/15/67

REVISIONS
8-5-67
11-14-67

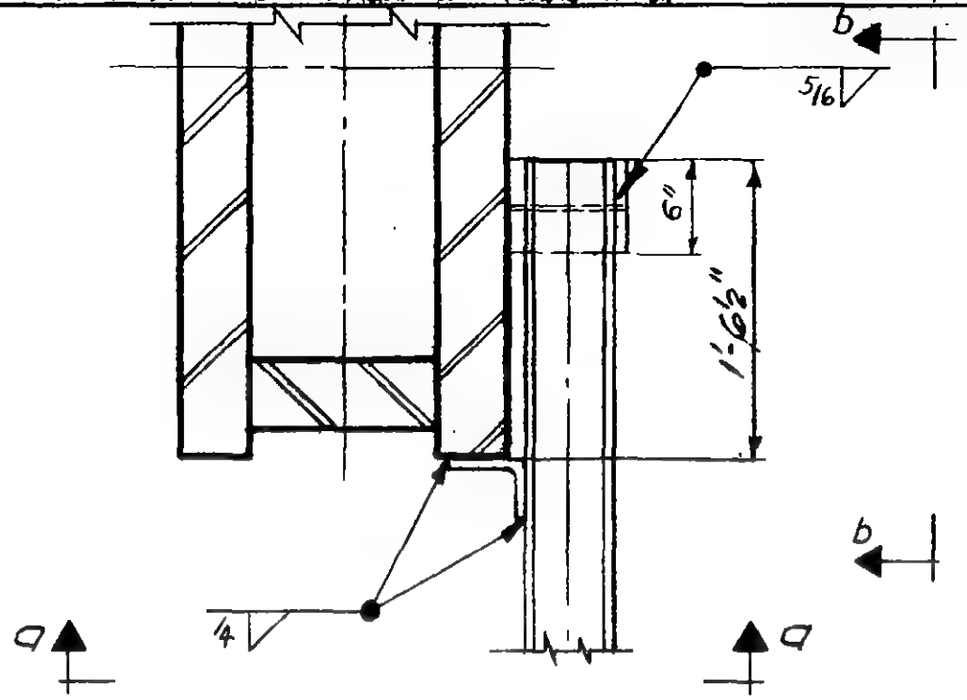

Plan

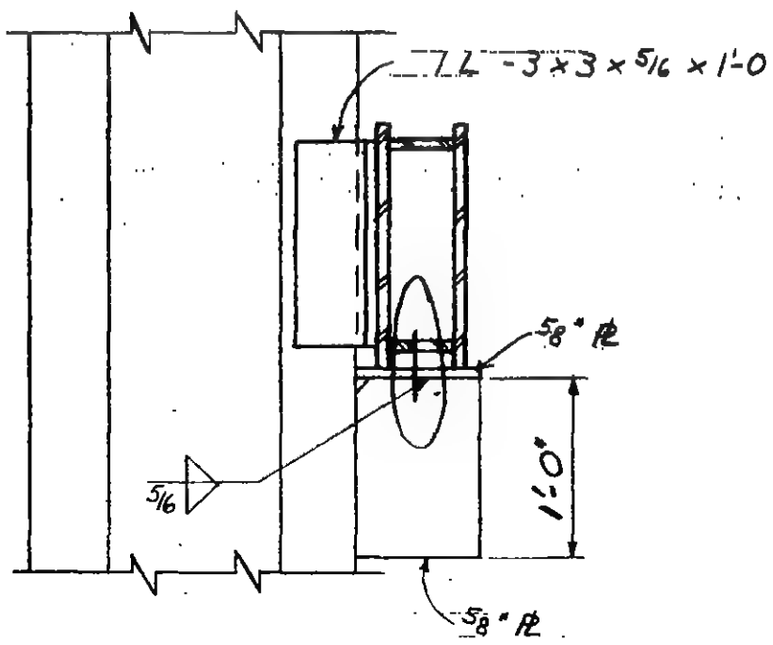

Section a-a

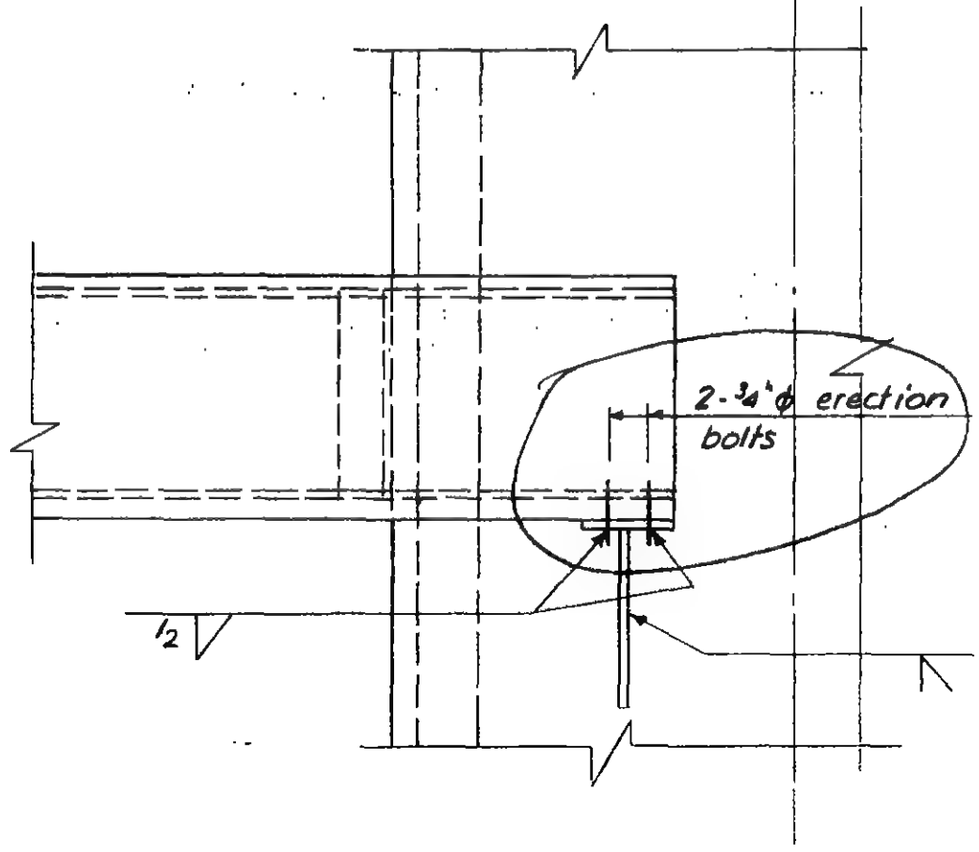

Section b-b

LICENSED PROFESSIONAL ENGINEER
LESLIE E. ROBERTSON
NEW YORK

6-AB1-32

SKILLING - HELLE - CHRISTIANSEN - ROBERTSON — Structural & Civil Engineers

PROJECT THE WORLD TRADE CENTER | TITLE CONNECTION DETAIL #226A | DATE 6-30-67

REVISIONS
10-5-67
5-6-68

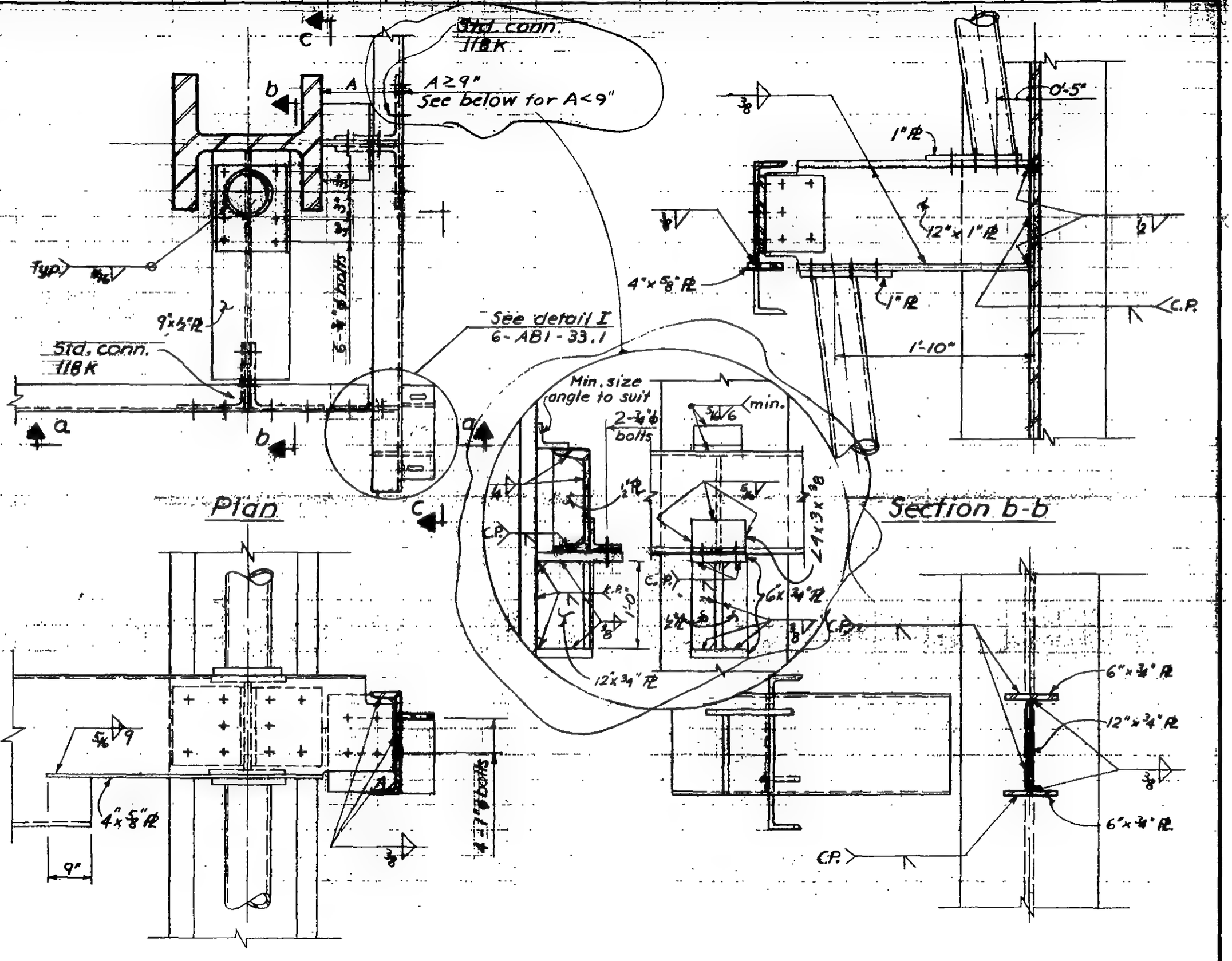

LICENSED PROFESSIONAL ENGINEER
LESLIE E. ROBERTSON
No. 34360
OF THE STATE OF NEW YORK

6-AB1-33

SKILLING - HELLE - CHRISTIANSEN - ROBERTSON Structural & Civil Engineers

PROJECT THE WORLD TRADE CENTER | TITLE CONNECTION DETAIL 226 A | DATE 10-5-67

REVISIONS

11-21-67

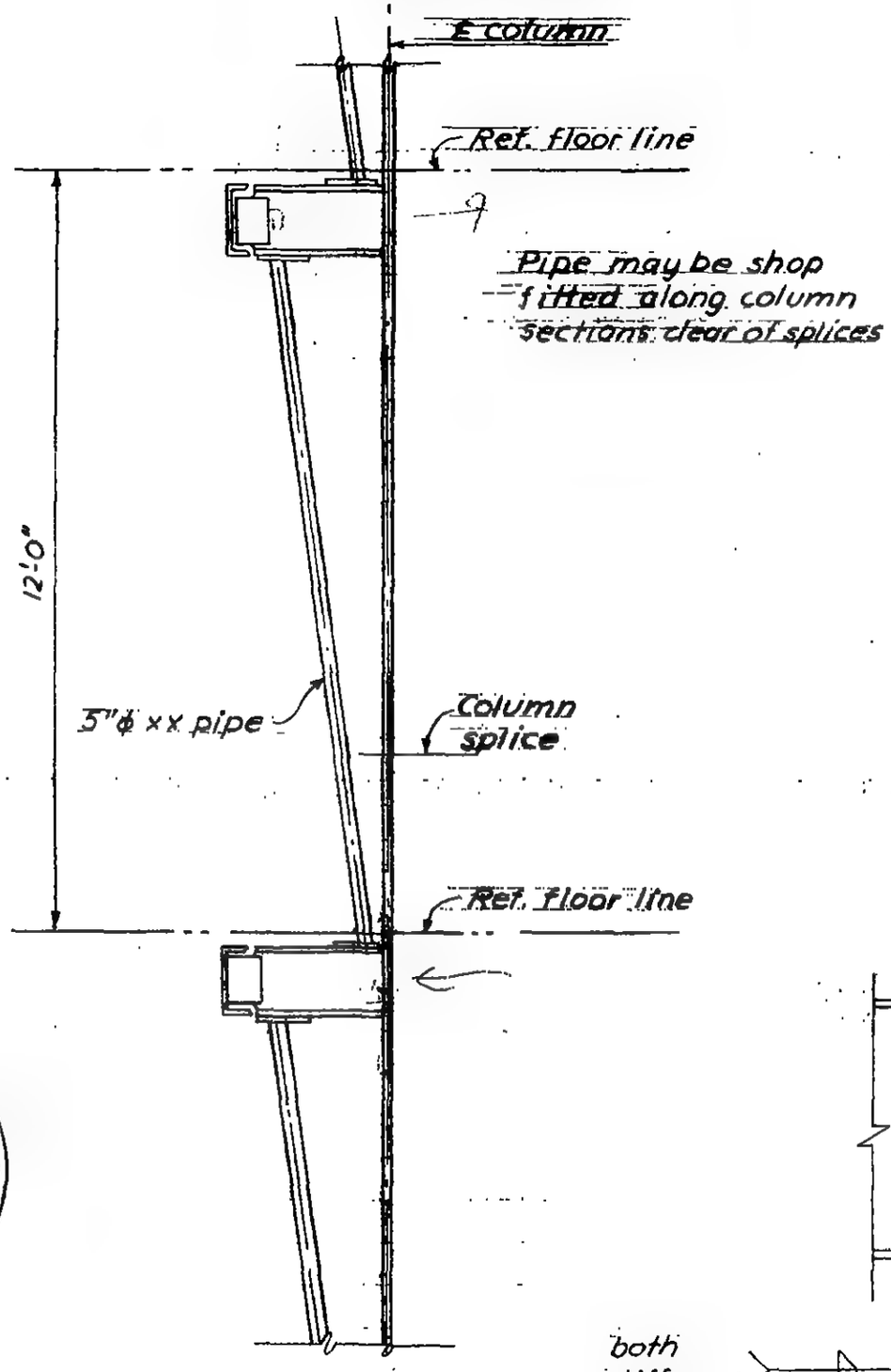

Elevation

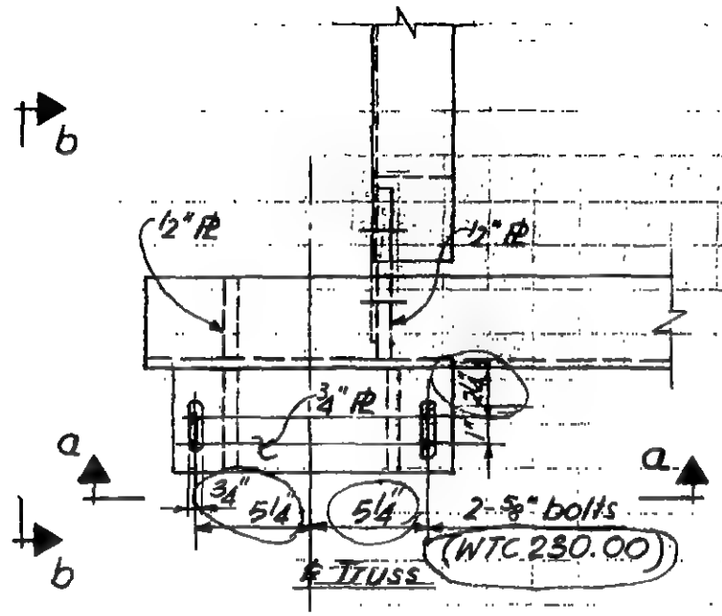

Plan

Detail I

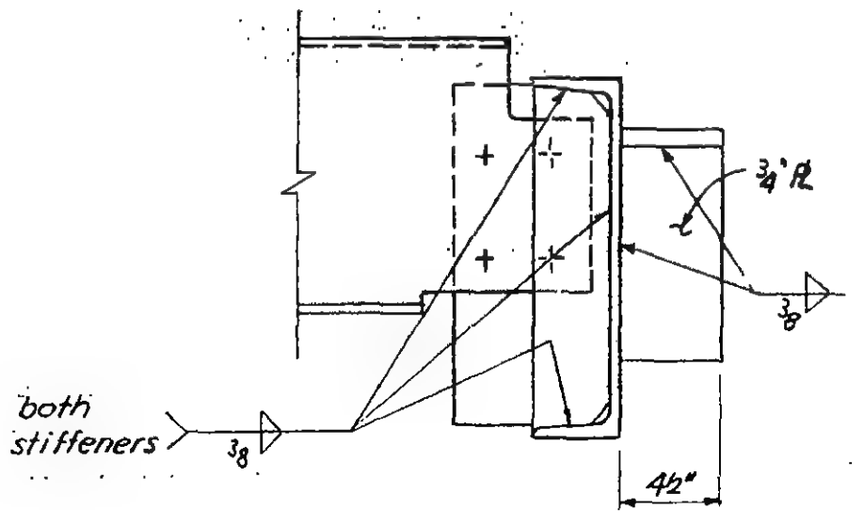

Section b-b

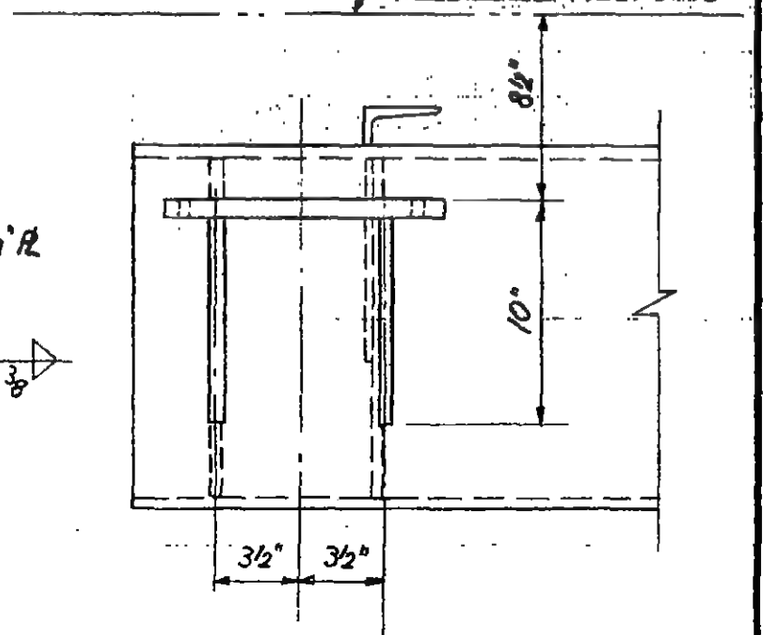

Section a-a

LICENSED PROFESSIONAL ENGINEER
LESLIE E. ROBERTSON
No. 34360
UNIVERSITY OF THE STATE OF NEW YORK

6-ABI-33.1

SKILLING - HELLE - CHRISTIANSEN - ROBERTSON — Structural & Civil Engineers

PROJECT: THE WORLD TRADE CENTER | TITLE: CONNECTION DETAIL 227 (A) | DATE: 6-5-67

REVISIONS
10-5-67

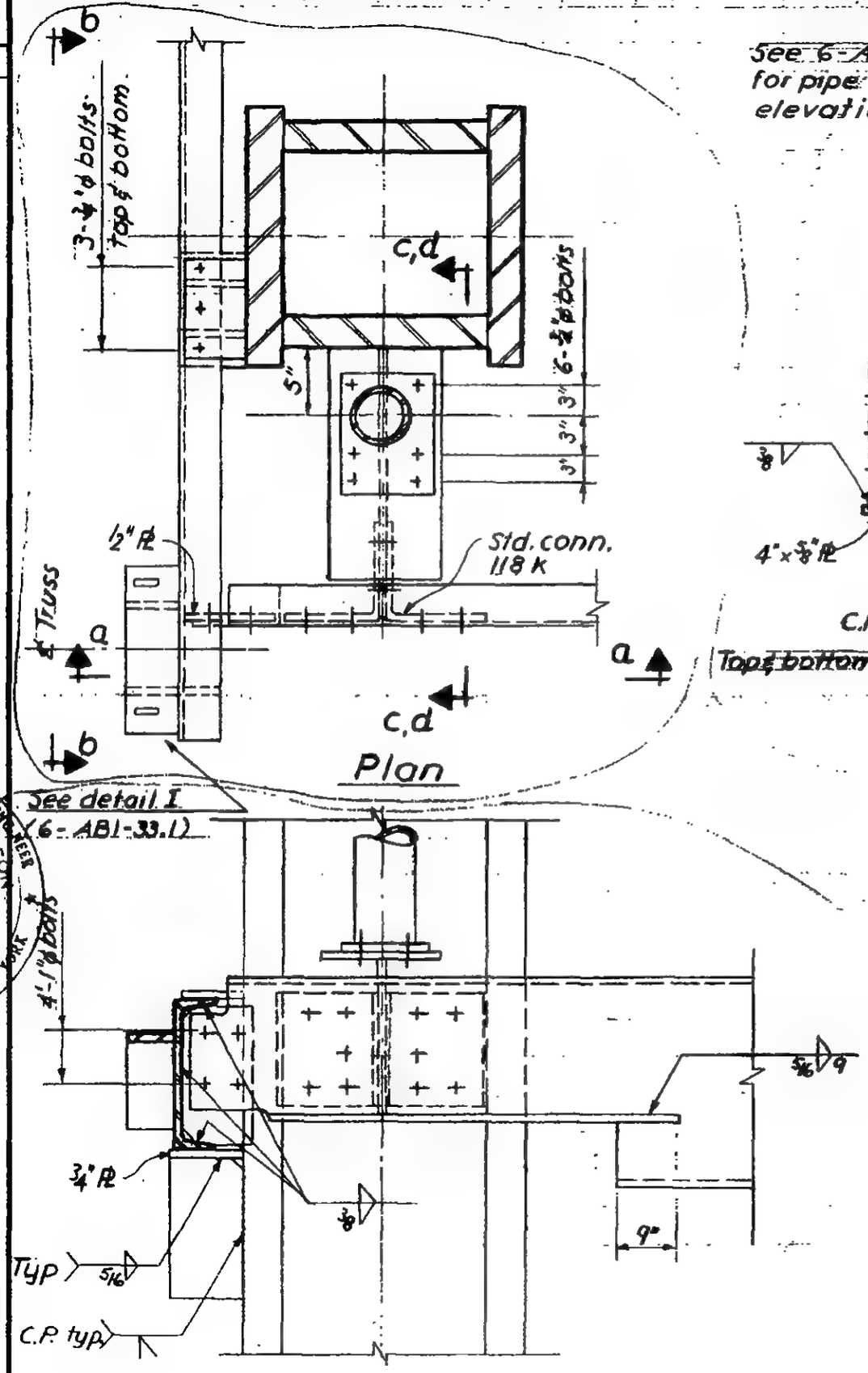

Section a-a

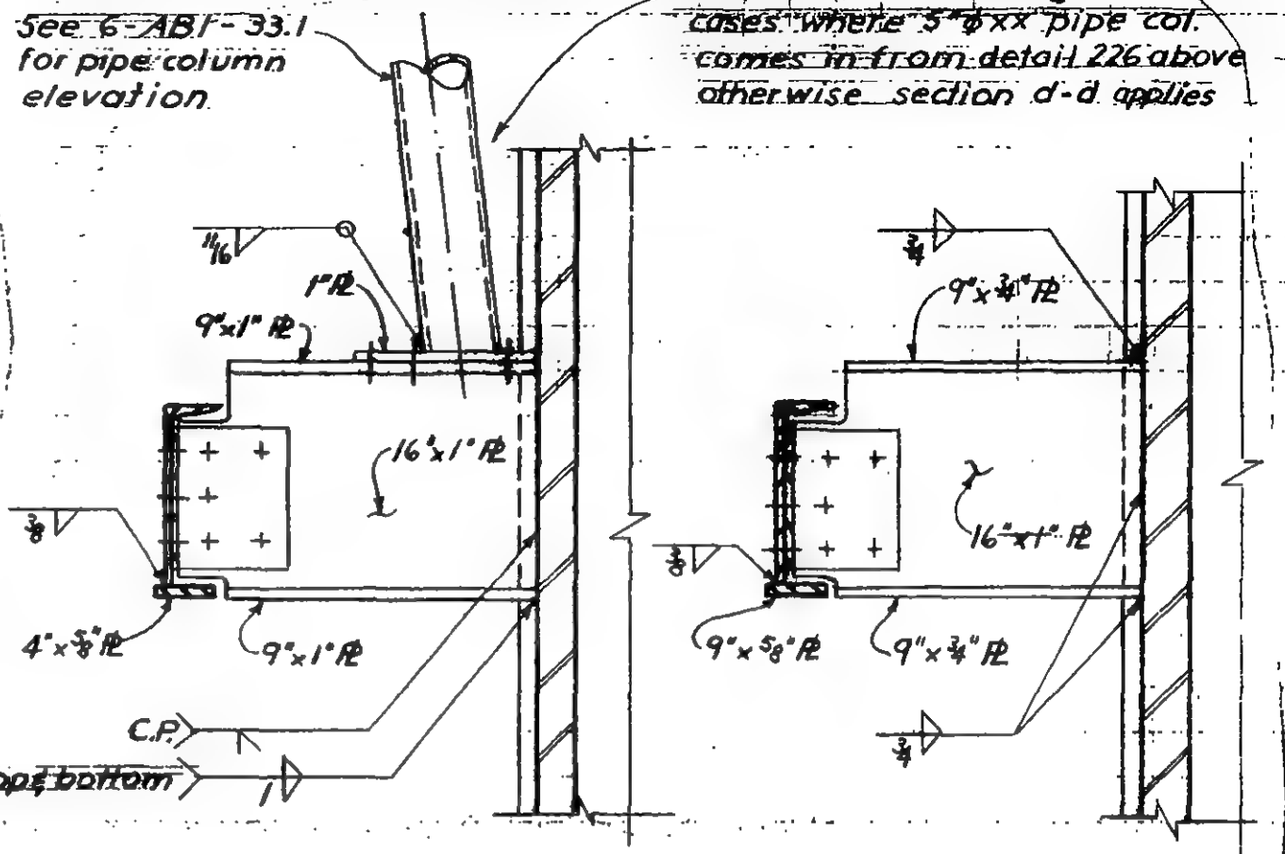

Section c-c

Section d-d

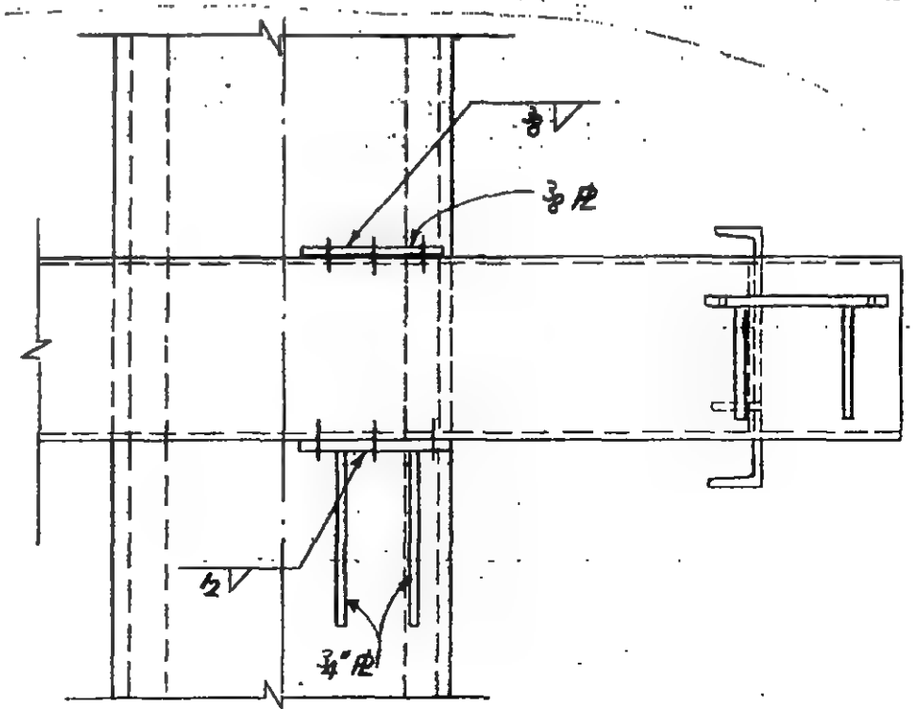

Section b-b

LICENSED PROFESSIONAL ENGINEER
LESLIE E. ROBERTSON
No. 34360
UNIVERSITY OF THE STATE OF NEW YORK

6-AB1-34

SKILLING -- HELLE -- CHRISTIANSEN -- ROBERTSON Structural & Civil Engineers

PROJECT THE WORLD TRADE CENTER | TITLE CONNECTION DETAIL 228 A & B | DATE 8-30-67

REVISIONS

10-5-67

11-23-67

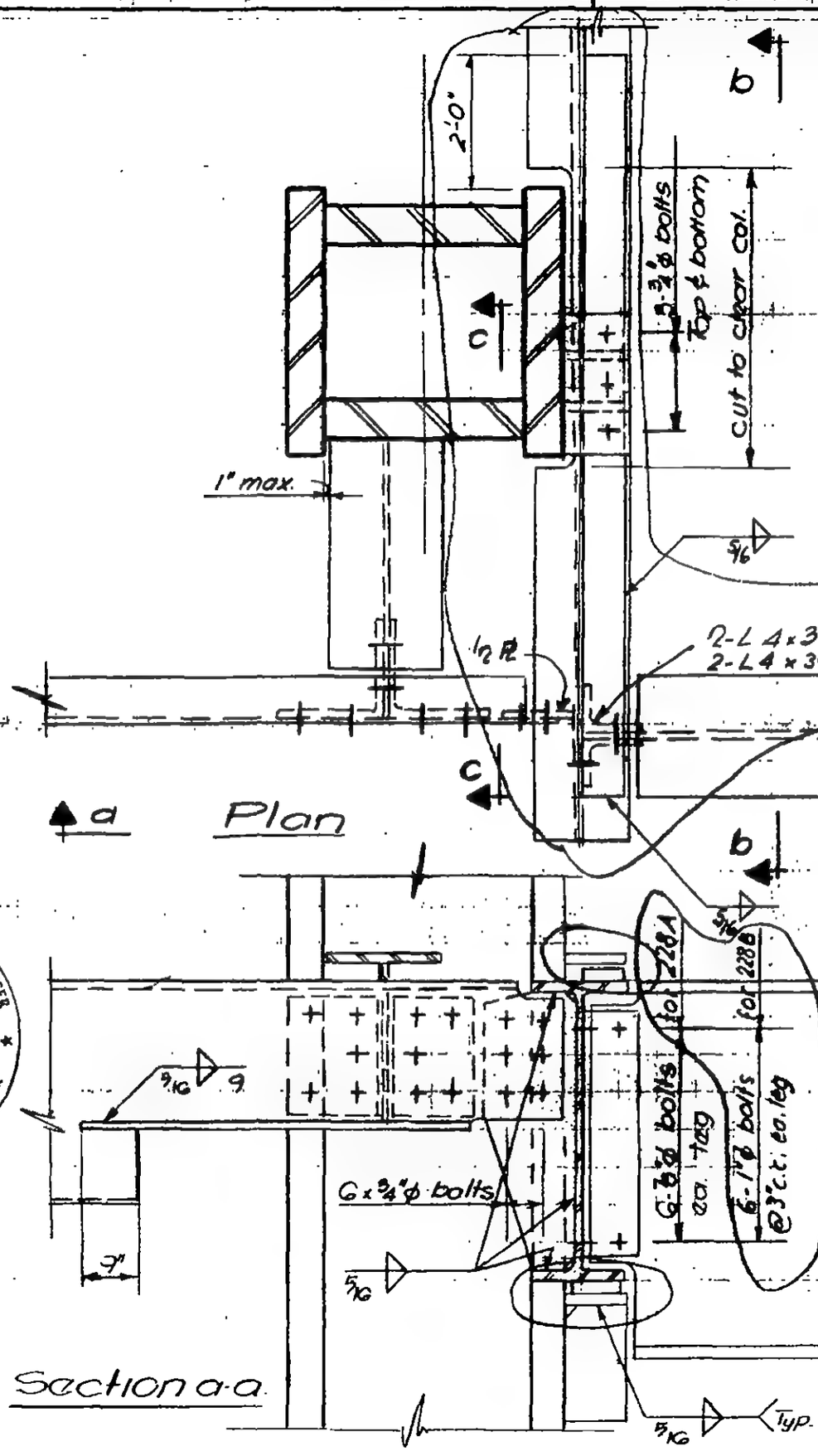

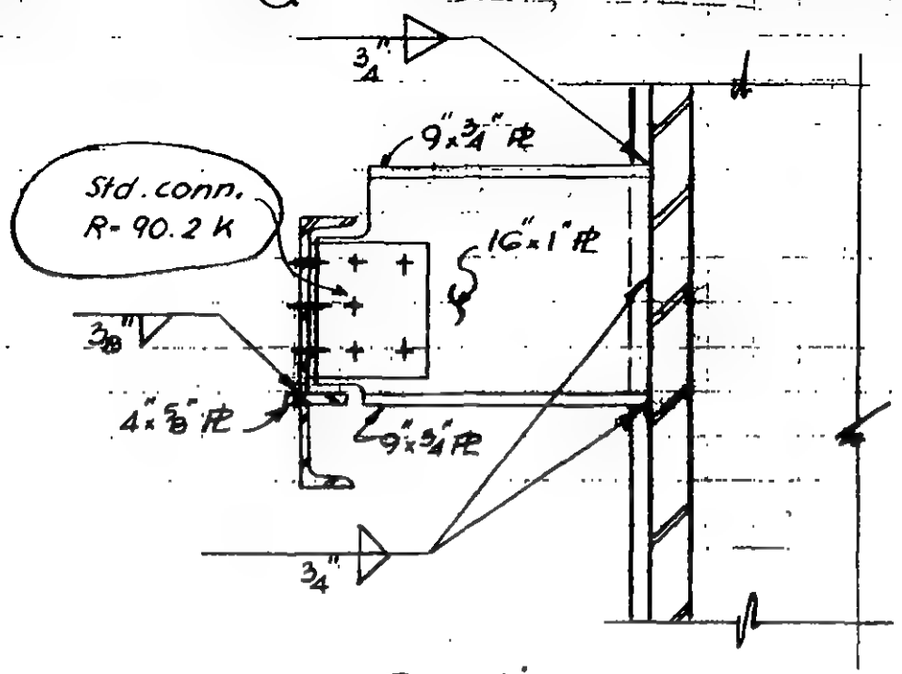

Section c-c

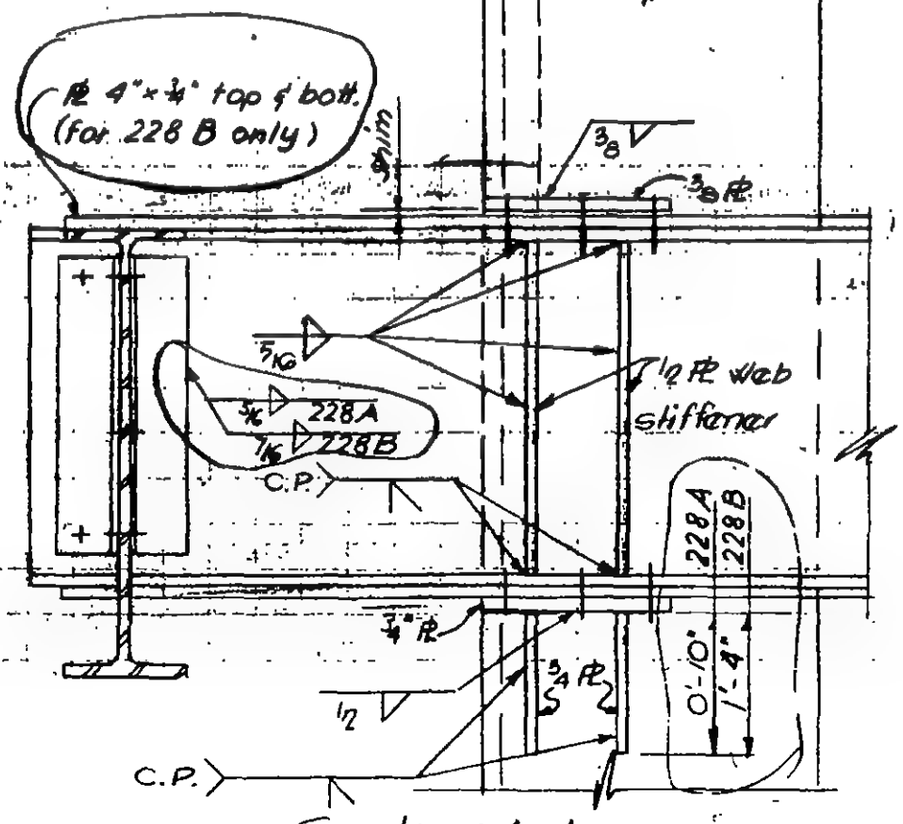

Section b-b

G-ABT-35

LICENSED PROFESSIONAL ENGINEER
LESLIE E. ROBERTSON
No. 34360
UNIVERSITY OF THE STATE OF NEW YORK

WORTHINGTON, SKILLING, HELLE & JACKSON — Civil & Structural Engineers

PROJECT THE WORLD TRADE CENTER | TITLE CONNECTION DETAIL (229 A) | DATE 6-5-67

REVISIONS

9-15-67
11-10-67

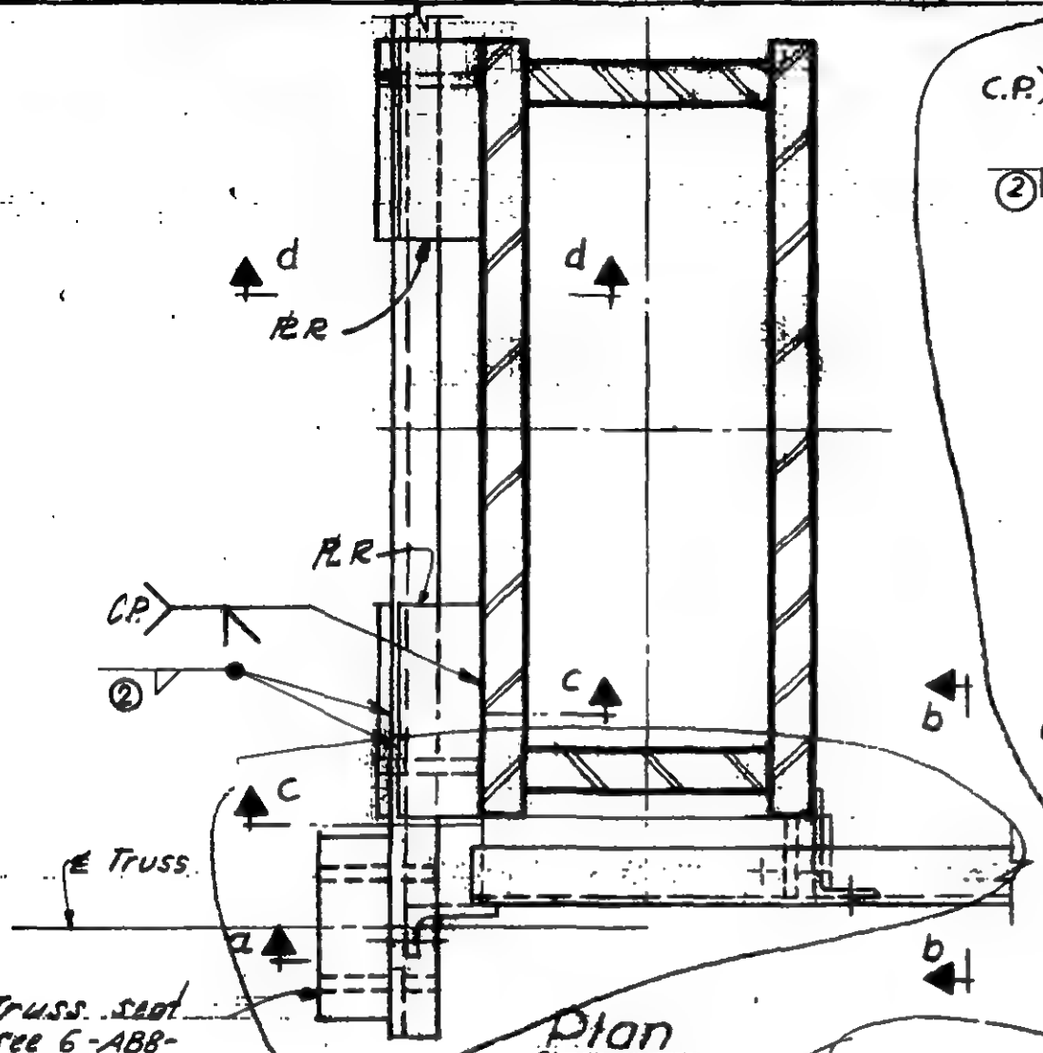

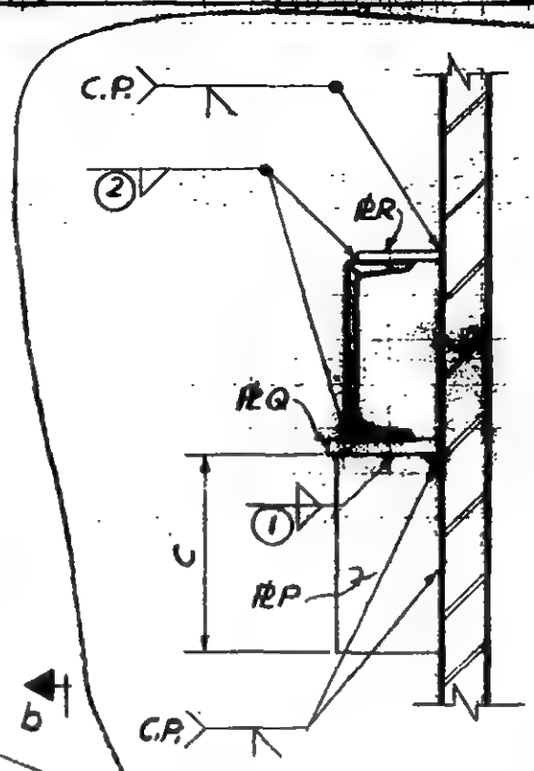

Section d-d

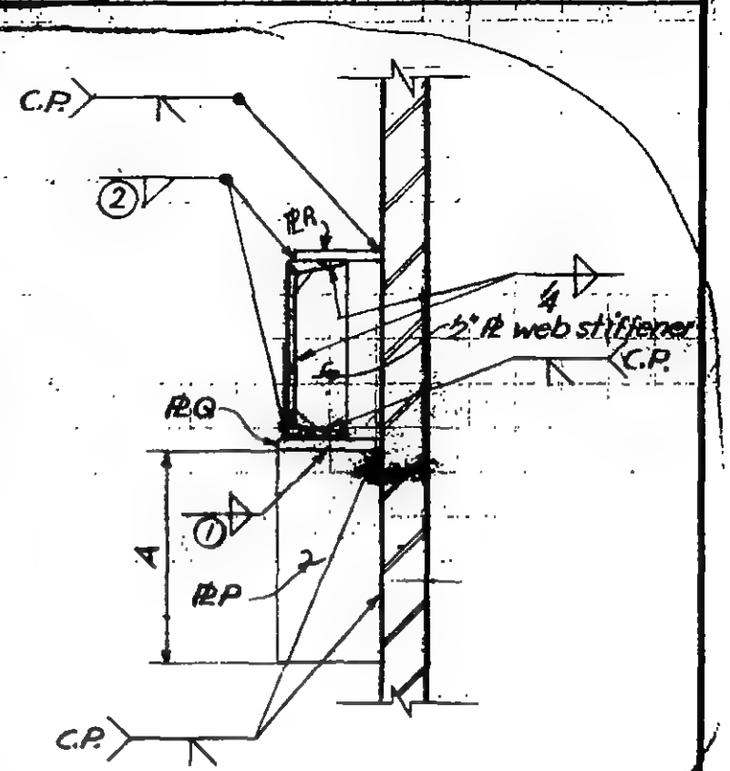

Section c-c

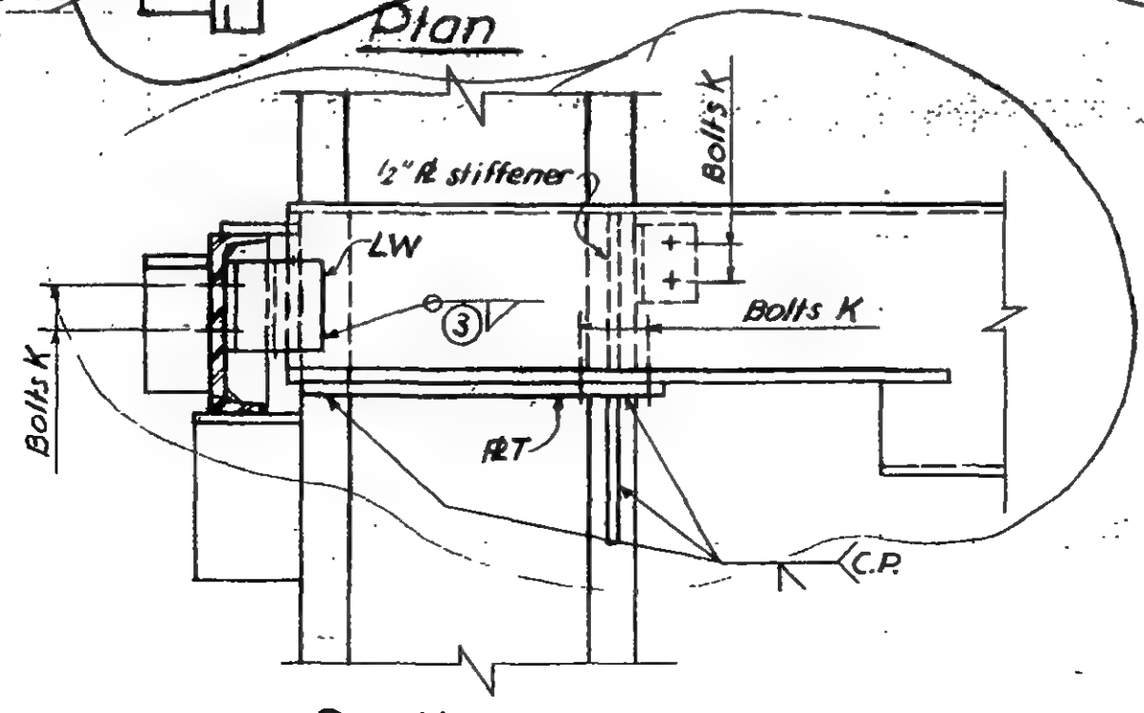

Section a-a

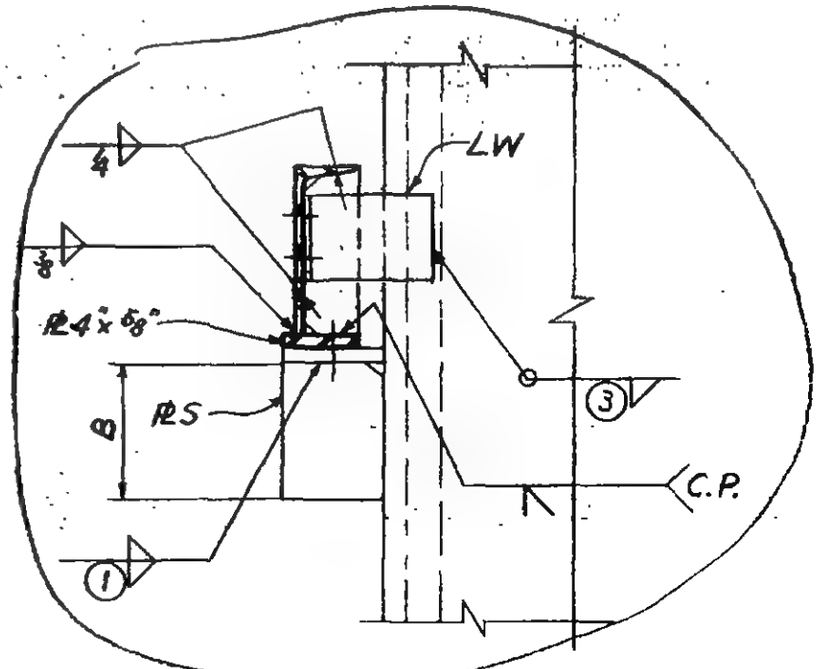

Section b-b

6-AB1-36

LICENSED PROFESSIONAL ENGINEER
LESLIE E. ROBERTSON
No. 24560
REGISTERED BY THE STATE OF NEW YORK

SKILLING - HELLE - CHRISTIANSEN - ROBERTSON Structural & Civil Engineers

PROJECT THE WORLD TRADE CENTER | TITLE SCHEDULE FOR DETAIL 229 A&B | DATE 9-15-67

REVISIONS

11-10-67

REF. DWGS.	6-AB1-36	6-AB1-36.2
	229A	229B
PLATES		
P	7"x1"	7"x1"
Q	7"x1"x1'-0"	7"x1"x1'-0"
R	4½"x¾"x1'-0"	4½"x¾x1'-0"
S	1"	—
T	1"	—
U	—	¾"
V	—	7"x¾"
DIMENSIONS		
A	1'-3"	1'-3"
B	1'-0"	1'-6"
C	0'-10"	0'-10"
BOLTS		
K	2-¾"ϕ	2-¾"ϕ
ANGLE		
W	7x4x⅜x0'-6"	7x4x⅜x0'-6"
WELDS		
①	5/16	5/16
②	½	½
③	5/16	5/16

5-AB1-36.1

SKILLING - HELLE - CHRISTIANSEN - ROBERTSON — Structural & Civil Engineers

PROJECT THE WORLD TRADE CENTER | TITLE CONNECTION DETAIL 229 B | DATE 11-10-67

REVISIONS

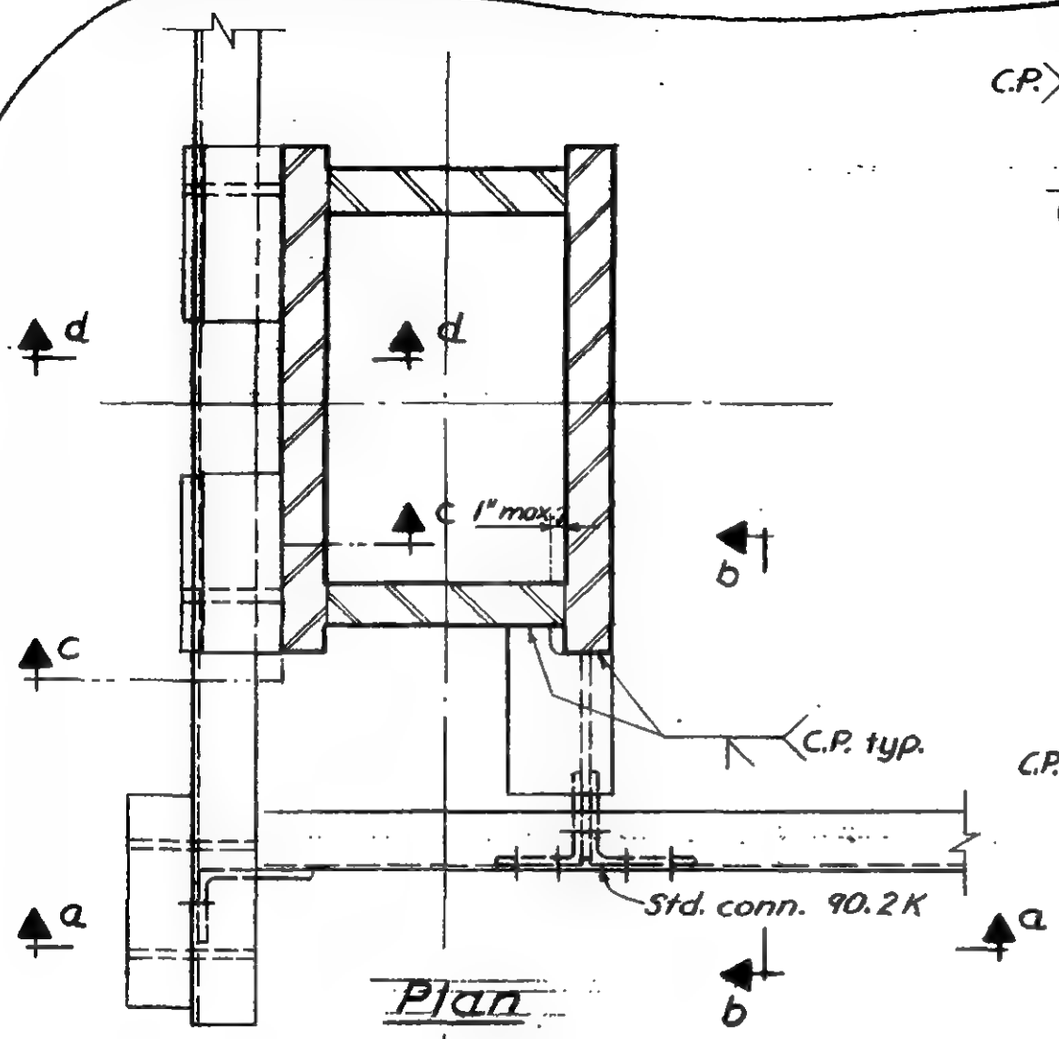

Plan

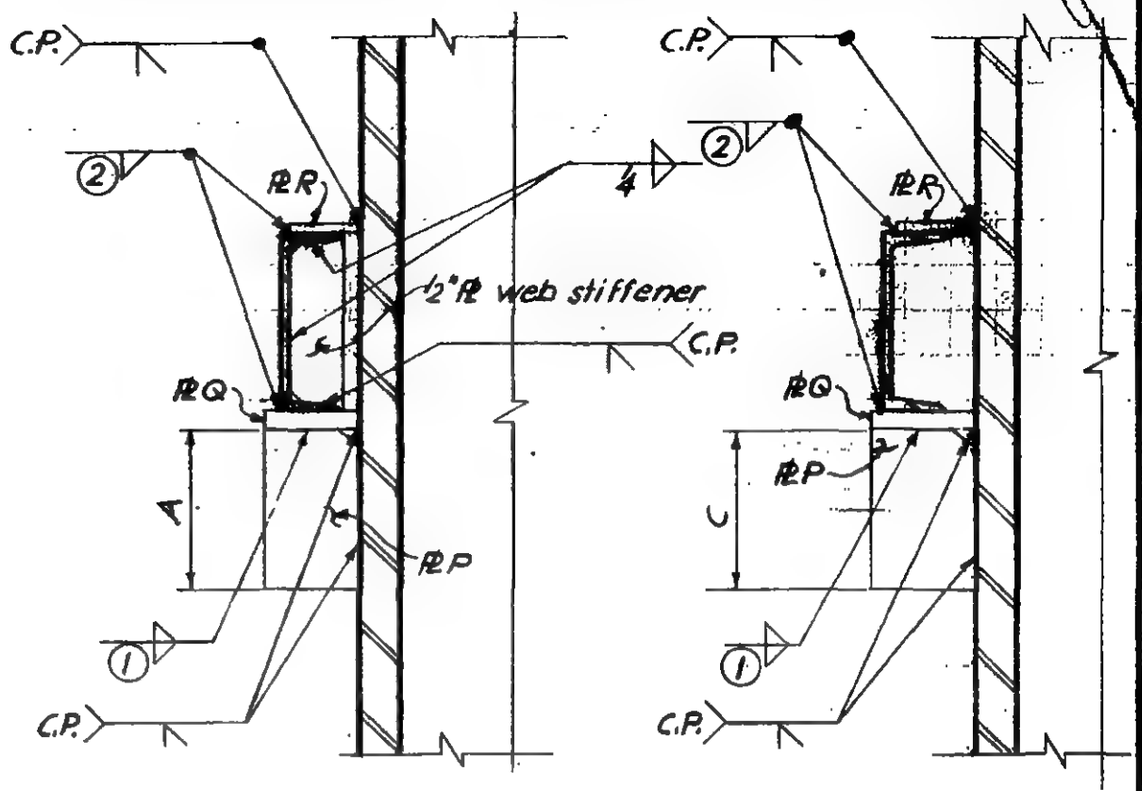

Section c-c

Section d-d

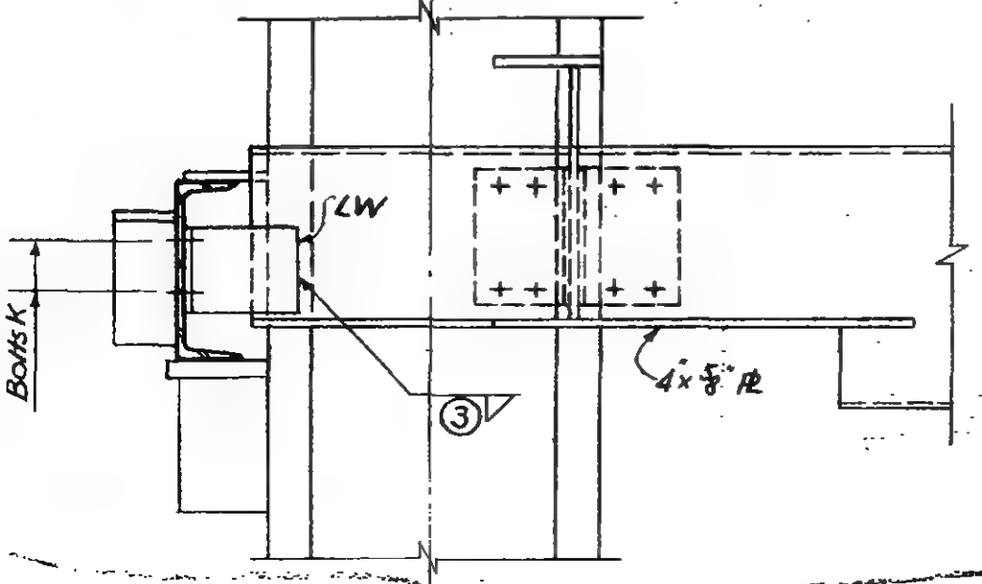

Section a-a

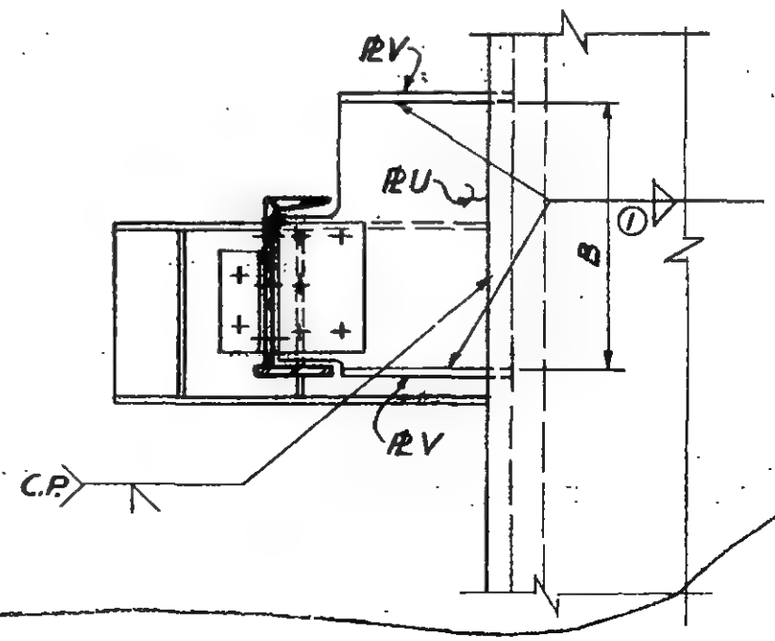

Section b-b

LICENSED PROFESSIONAL ENGINEER
LESLIE E. ROBERTSON
No. 34360
UNIVERSITY OF THE STATE OF NEW YORK

6-ABI-36.2

WORTHINGTON, SKILLING, HELLE & JACKSON — Civil & Structural Engineers

PROJECT: THE WORLD TRADE CENTER | TITLE: CONNECTION DETAIL 230 | DATE: 7/20/67

REVISIONS

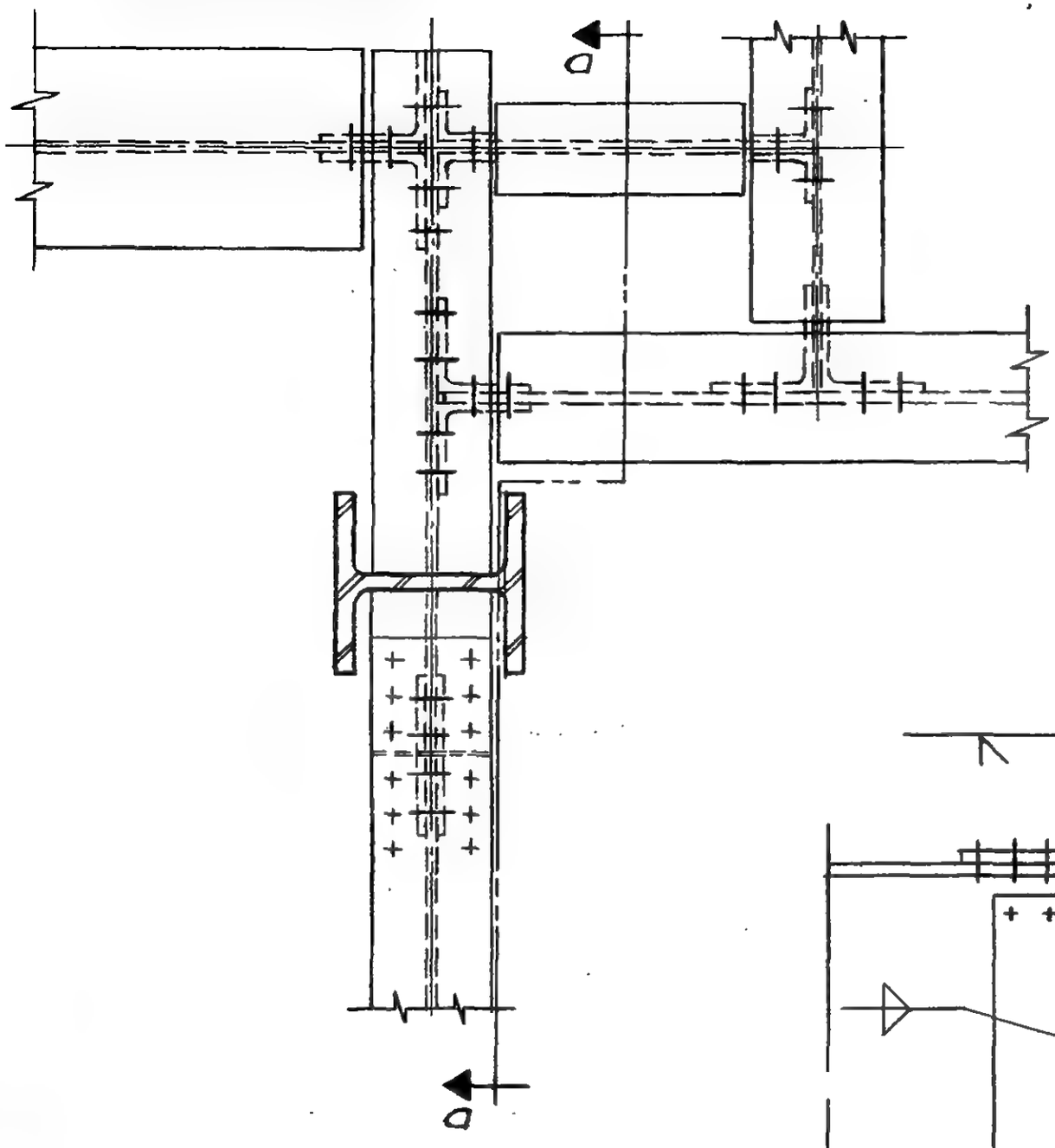

PLAN

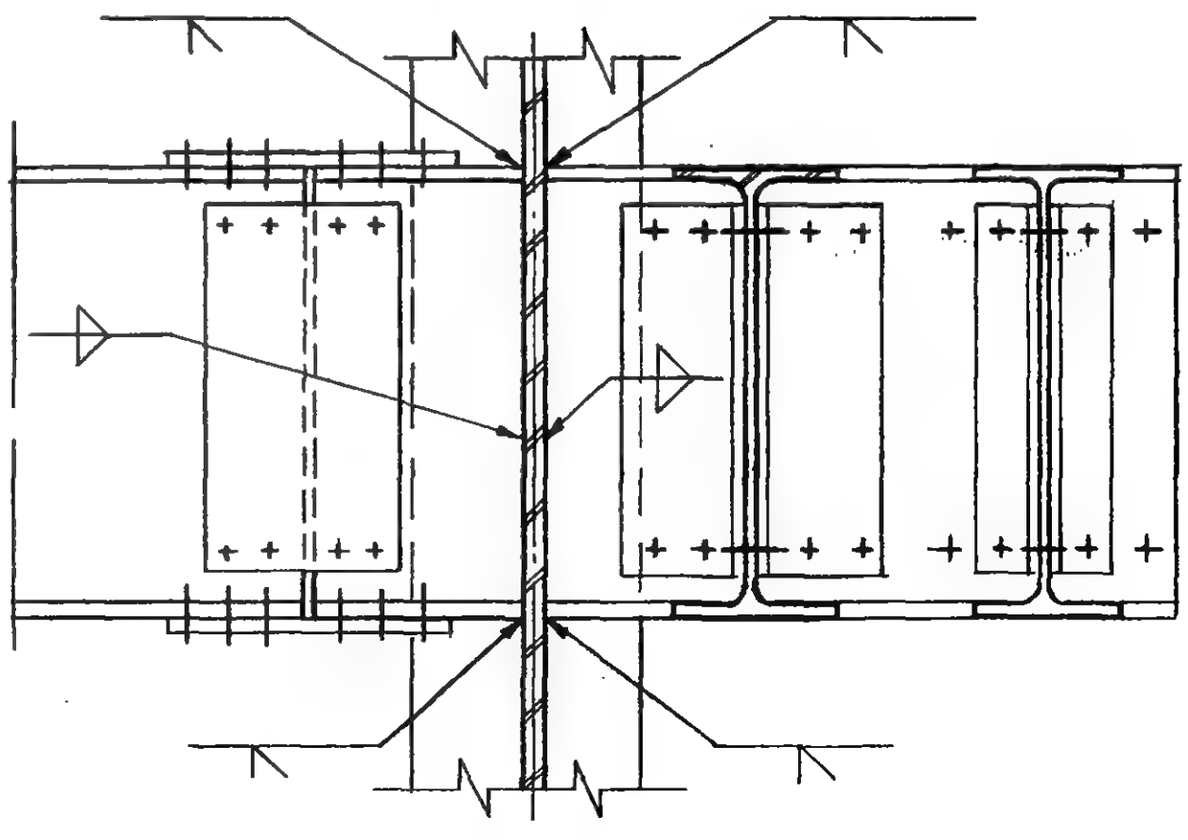

Section a-a

LICENSED PROFESSIONAL ENGINEER
LESLIE E. ROBERTSON
No. 34860
UNIVERSITY OF THE STATE OF NEW YORK

G-ABI-37

SKILLING - HELLE - CHRISTIANSEN - ROBERTSON Structural & Civil Engineers

PROJECT THE WORLD TRADE CENTER | TITLE CONNECTION DETAIL 231A | DATE 6-5-67

REVISIONS

1 11-23-67

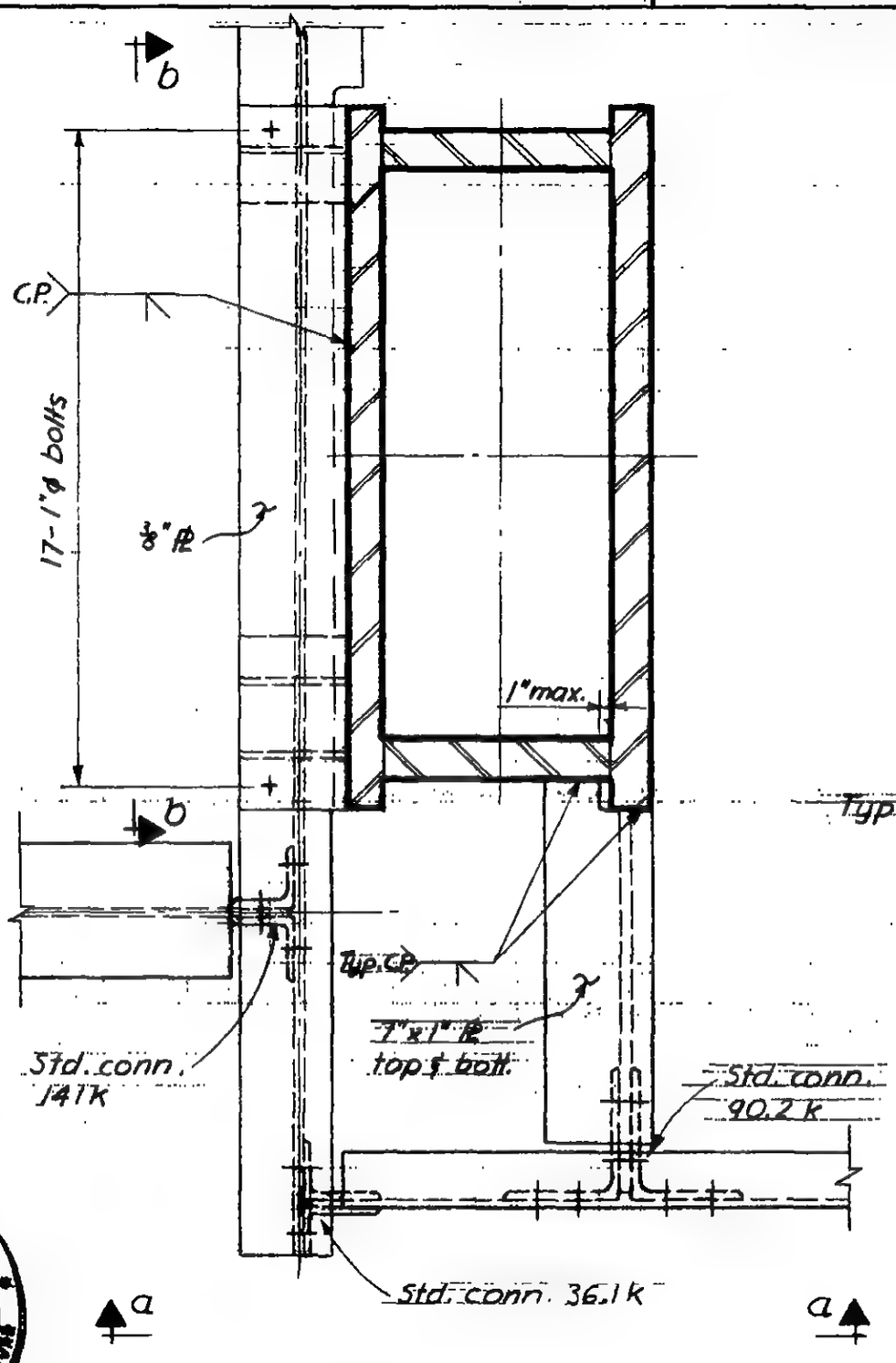

Plan

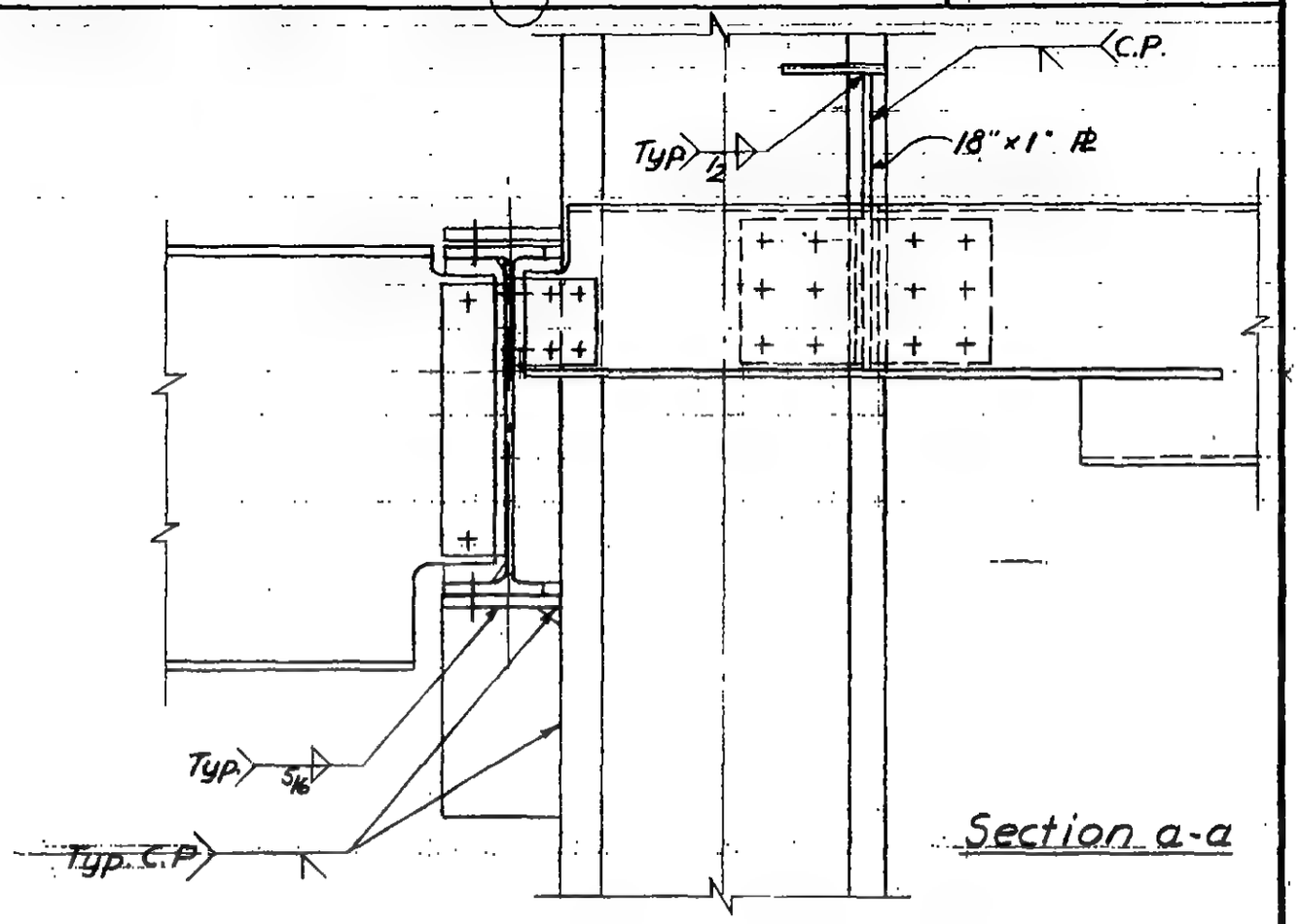

Section a-a

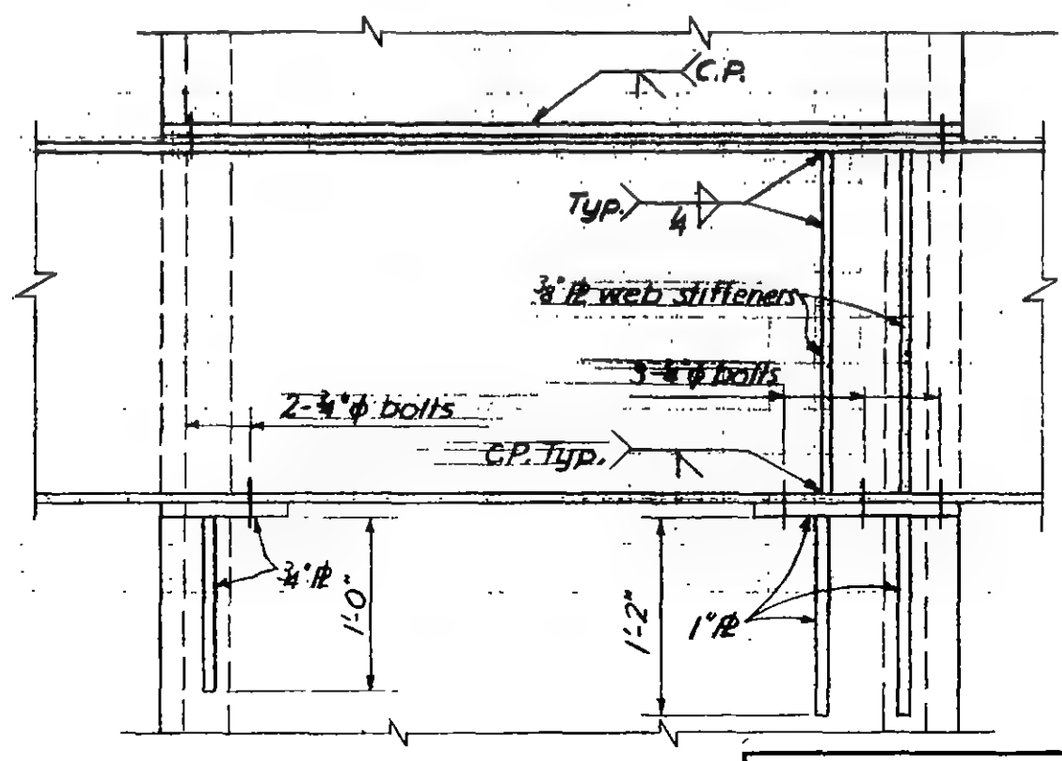

Section b-b

6-ABI-38

LICENSED PROFESSIONAL ENGINEER
LESLIE E. ROBERTSON
No. 34968
UNIVERSITY OF THE STATE OF NEW YORK

WORTHINGTON, SKILLING, HELLE & JACKSON — Civil & Structural Engineers

PROJECT: THE WORLD TRADE CENTER | TITLE: CONNECTION DETAIL 232 A, B & C | DATE: 5-1-67

REVISIONS

5-9-67
7-28-67
9-15-67
11-10-67
12-7-67

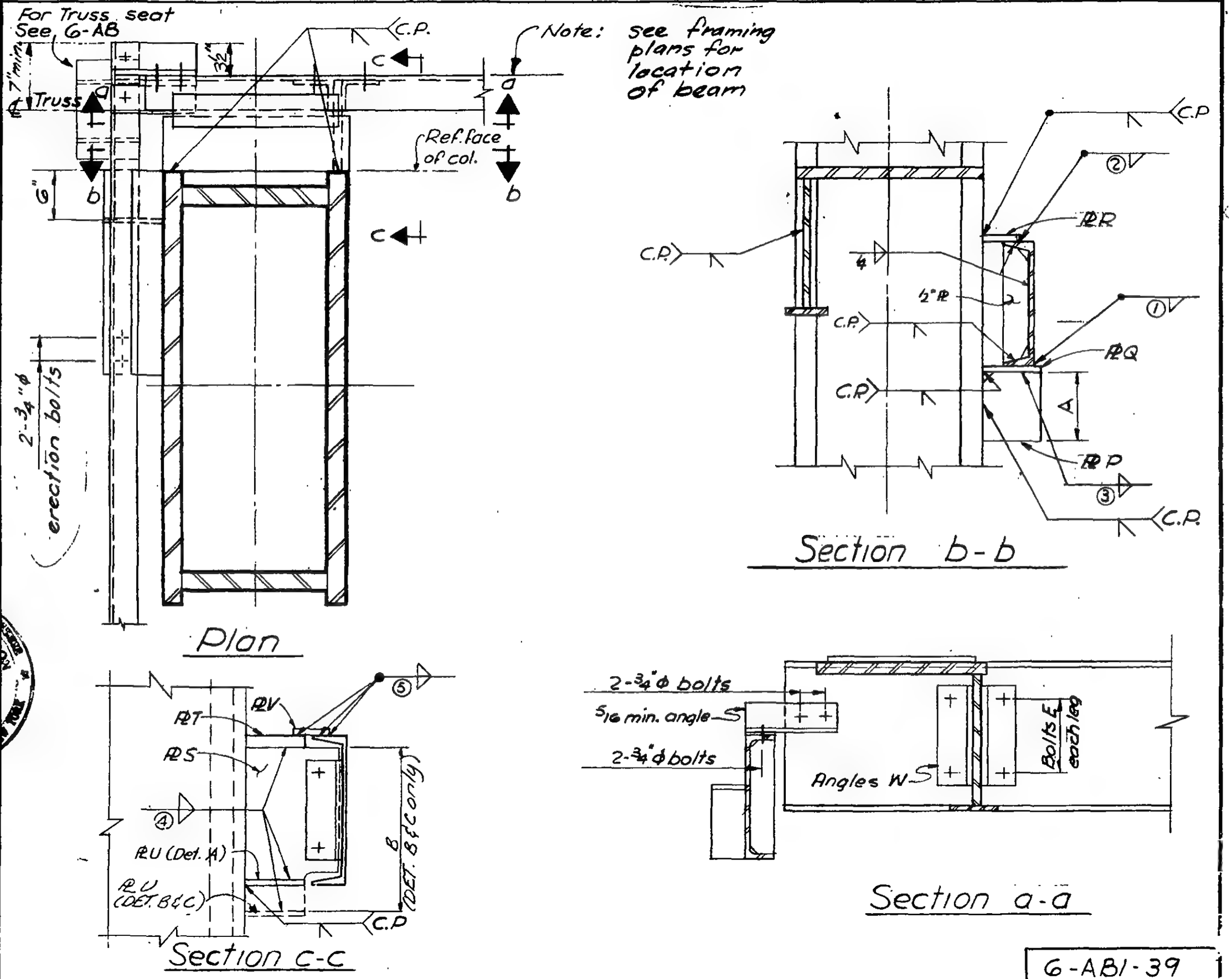

6-AB1-39

SKILLING - HELLE - CHRISTIANSEN - ROBERTSON Structural & Civil Engineers

PROJECT THE WORLD TRADE CENTER | TITLE SCHEDULE FOR DETAIL 232 A, B & C | DATE 7-28-67

REVISIONS

9-15-67

	232A	232B	232C			
PLATES						
P	7x1	7x1	7x1			
Q	7x1x2'-1"	7x1x2'-1"	7x1x2'-1"			
R	4½x¾x2'-1"	4½x¾x2'-1"	4½x¾x2'-1"			
S	½	⅜	⅜			
T	1½	1½	1¼			
U	5x¾	5x¾	5x¾			
V	4x½x1'-8"	4x¾x1'-8"	4x¾x1'-8"			
ANGLES						
W	4x3½x7/16	4x3½x⅜	4x3½x⅜			
DIMENSIONS						
A	1'-3"	1'-3"	1'-3"			
B	—	1'-6"	1'-8"			
BOLTS						
E	4-1"ϕ	4-⅞"ϕ	4-⅞"ϕ			
WELDS						
①	½	½	½			
②	½	½	½			
③	⅝	⅝	⅝			
④	½	½	½			
⑤	½	11/16	⅝			

6-AB1-39.1

WORTHINGTON, SKILLING, HELLE & JACKSON — Civil & Structural Engineers

PROJECT: THE WORLD TRADE CENTER | TITLE: CONNECTION DETAIL 233 A | DATE: 5-1-67

REVISIONS
7-28-67
11-17-67
12-7-67

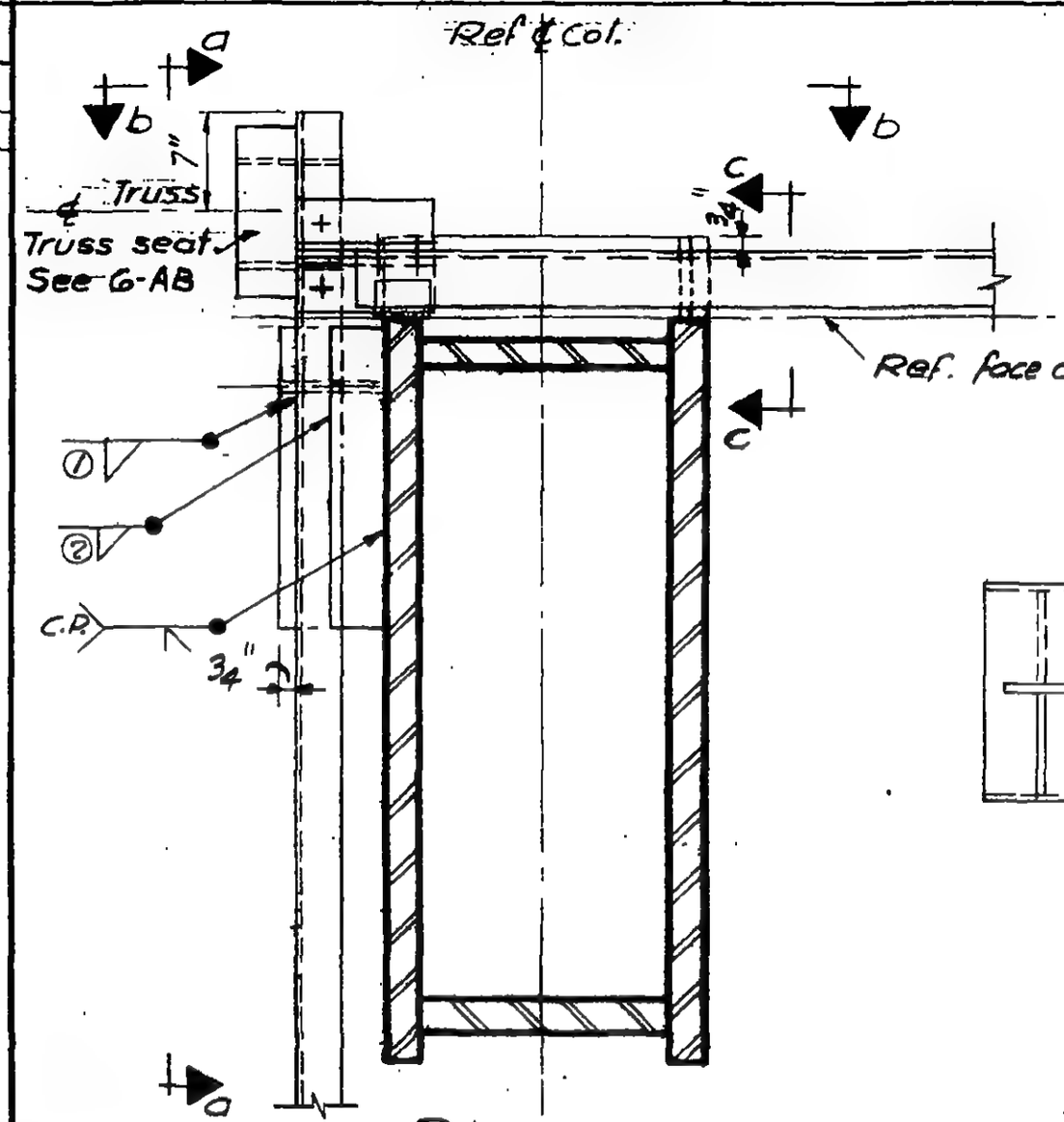

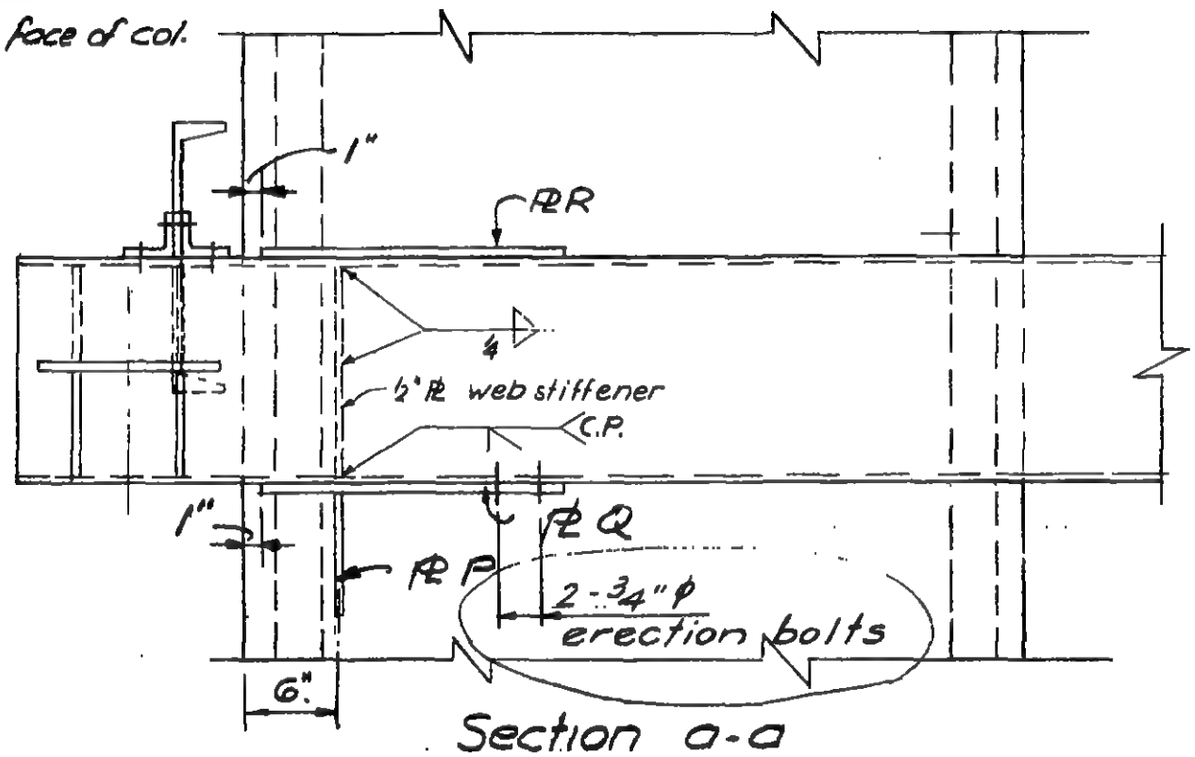

Section a-a

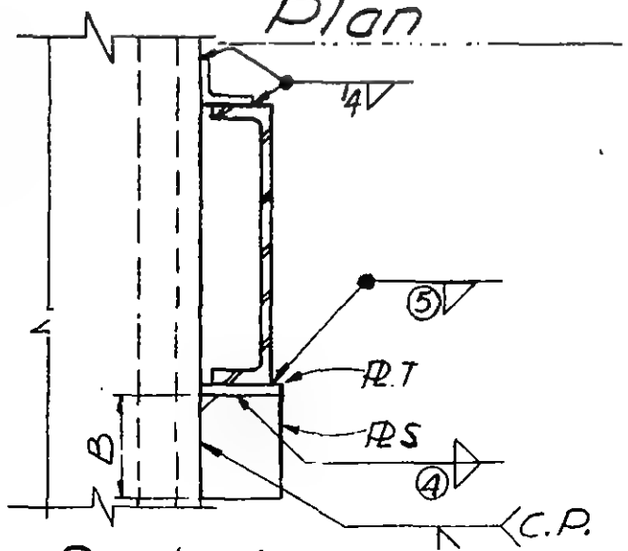

Section c-c

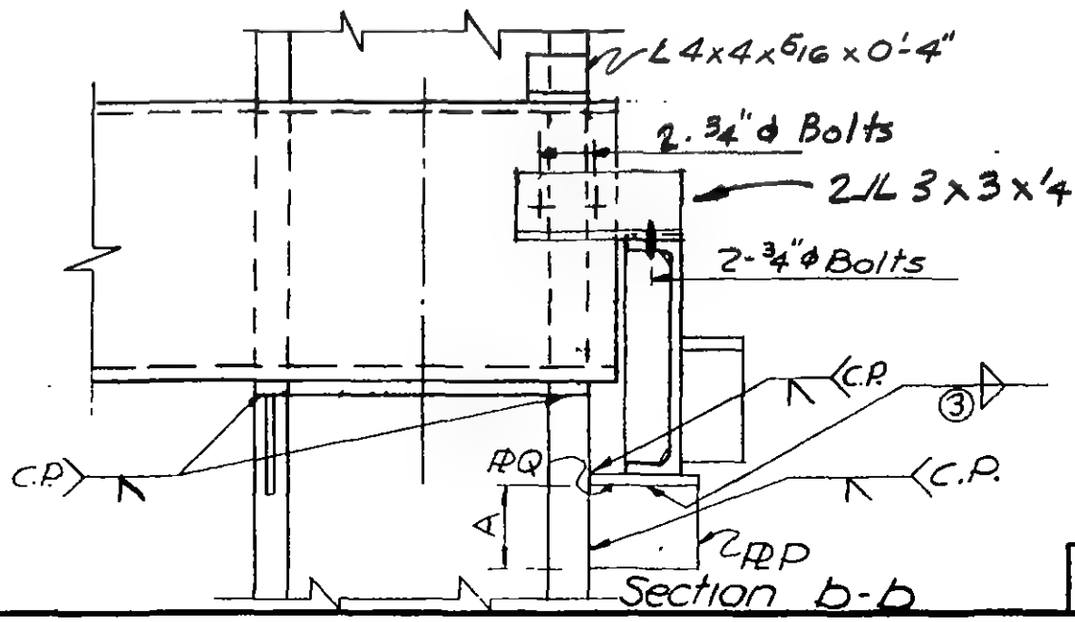

Section b-b

6-AB1-40

LICENSED PROFESSIONAL ENGINEER — LESLIE E. ROBERTSON — No. 34360 — UNIVERSITY OF THE STATE OF NEW YORK

WORTHINGTON, SKILLING, HELLE & JACKSON — Civil & Structural Engineers

PROJECT THE WORLD TRADE CENTER | TITLE SCHEDULE FOR DETAIL 238 | DATE 4/68

REVISIONS

	233A
PLATES	
P	1"
Q	1" x 2'-1"
R	4 1/2" x 3/4" x 2'-1"
S	1"
T	1"
DIMENSIONS	
A	1'-3"
B	0'-10"
WELDS	
①	1/2
②	1/2
③	5/8
④	7/16
⑤	3/8

LICENSED PROFESSIONAL ENGINEER
LESLIE E. ROBERTSON
No. 34360
REGISTERED IN THE STATE OF NEW YORK

6-AB1-40.1

WORTHINGTON, SKILLING, HELLE & JACKSON — Civil & Structural Engineers

PROJECT THE WORLD TRADE CENTER | TITLE CONNECTION DETAIL 234 A&F, J, K, L | DATE 6-12-67

REVISIONS

6-19-67
7-28-67
2-9-68
9-18-68

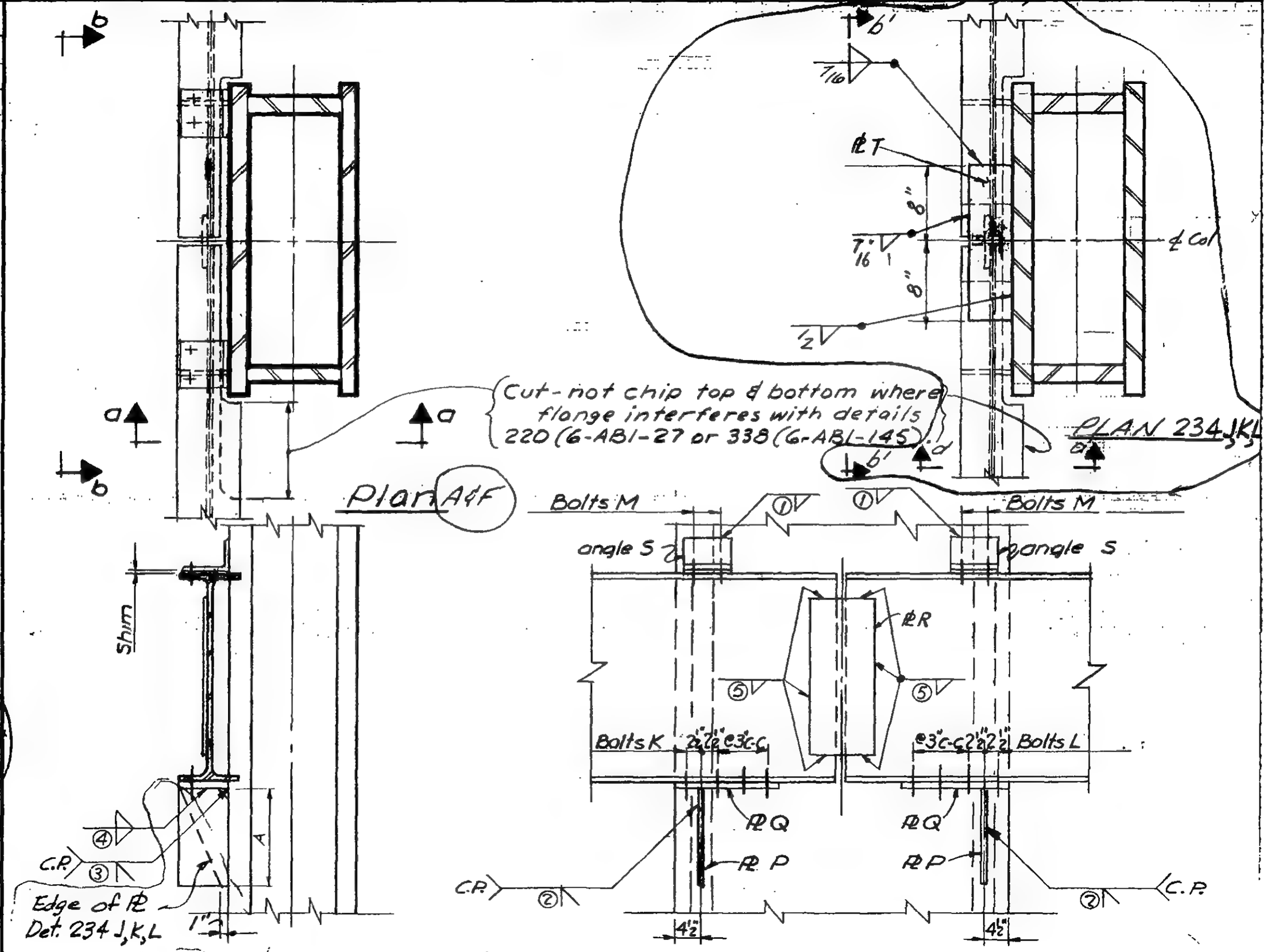

Section a-a
Section a'-a' similar

Section b-b
Section b'-b' similar

LICENSED PROFESSIONAL ENGINEER — LESLIE E. ROBERTSON — No. 34360 — UNIVERSITY OF THE STATE OF NEW YORK

6-ABI-41

SKILLING - HELLE - CHRISTIANSEN - ROBERTSON Structural & Civil Engineers

PROJECT THE WORLD TRADE CENTER | TITLE SCHEDULE FOR DETAIL 234 A, F & G, J, K, L | DATE 7-28-67

REVISIONS
2-9-68
9-18-68

	234 A	234 F	234 G	234 J	234 K	234 L
PLATES						
P	7/8"	7/8"	7/8"	7/8"	1"	1"
Q	1"	1"	1"	1"	1 1/4"	1 1/4"
R	4" x 3/8" x 1'-0"	4" x 3/8" x 1'-0"	4" x 3/8" x 1'-0"	4" x 3/8" x 1'-0"	4" x 3/8" x 1'-0"	4" x 3/8" x 1'-0"
T	—	—	—	1/2"	1/2"	1/2"
DIMENSIONS						
A	0'-10"	1'-1"	1'-2"	1'-1"		
ANGLES						
S	6 x 4 x 5/16	6 x 4 x 5/16	—	—		
BOLTS						
K	4 - 1 1/8" ϕ	4 - 1 1/8" ϕ	4 - 1 1/8" ϕ	4 - 1 1/8" ϕ	4 - 1 1/8" ϕ	6 - 1 1/8" ϕ (Brg.)
L	4 - 1 1/8" ϕ	4 - 1 1/8" ϕ	4 - 1 1/8" ϕ	4 - 1 1/8" ϕ	4 - 1 1/8" ϕ	6 - 1 1/8" ϕ (Brg.)
M	2 - 3/4" ϕ	2 - 3/4" ϕ	—	2 - 3/4" ϕ		
WELDS						
①	4	4	—	—	—	—
②	C.P.	C.P.	C.P.	C.P.	C.P.	C.P.
③	C.P.	C.P.	C.P.	C.P.	C.P.	C.P.
④	3/8	3/8	3/8	3/8	1/2	1/2
⑤	5/16	5/16	5/16	5/16	5/16	5/16

LICENSED PROFESSIONAL ENGINEER
LESLIE E. ROBERTSON
No. 34360
STATE OF NEW YORK

6-ABI-41.1

SKILLING - HELLE - CHRISTIANSEN - ROBERTSON — Structural & Civil Engineers

PROJECT: THE WORLD TRADE CENTER | TITLE: CONNECTION DETAIL 2nd DEE | DATE: 8-14-67

REVISIONS
2-9-68

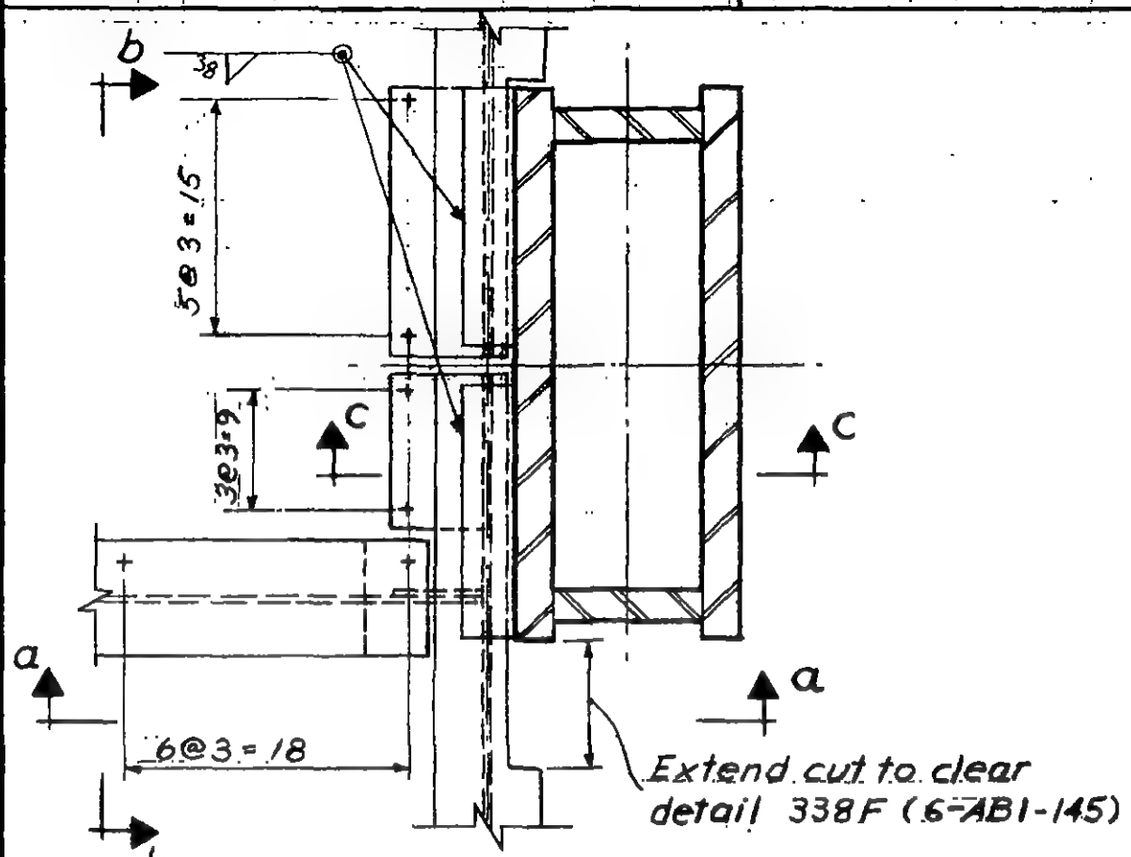

Plan

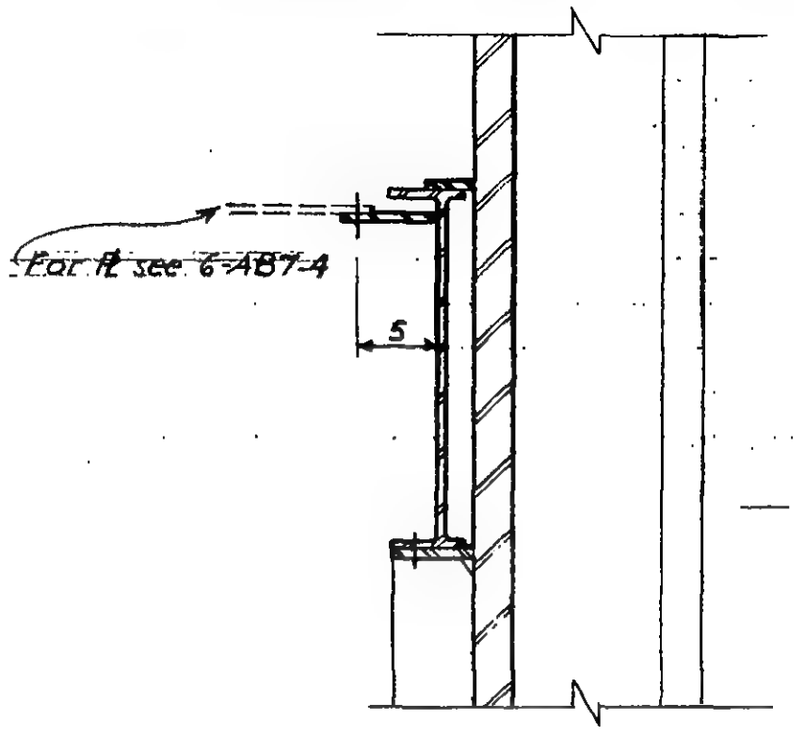

Section c-c

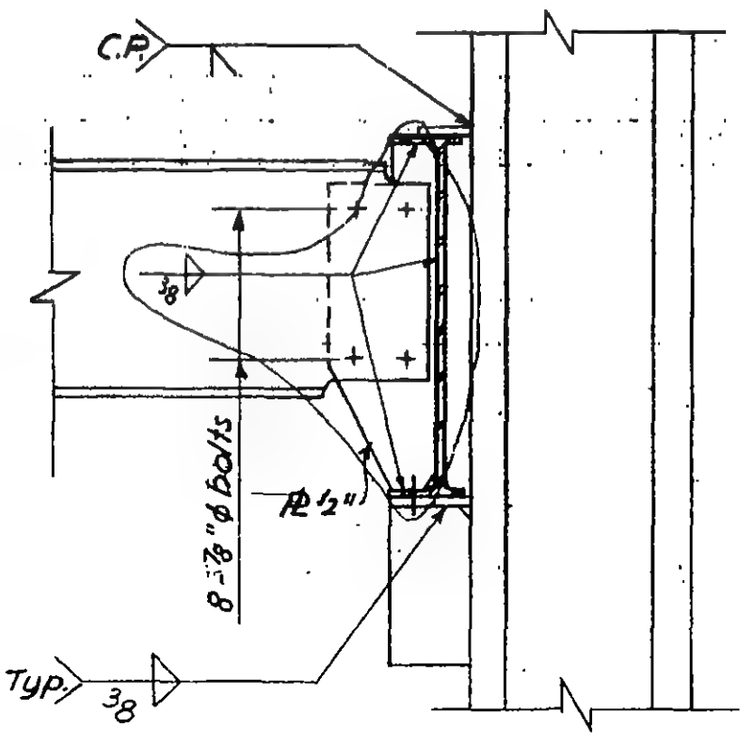

Section a-a

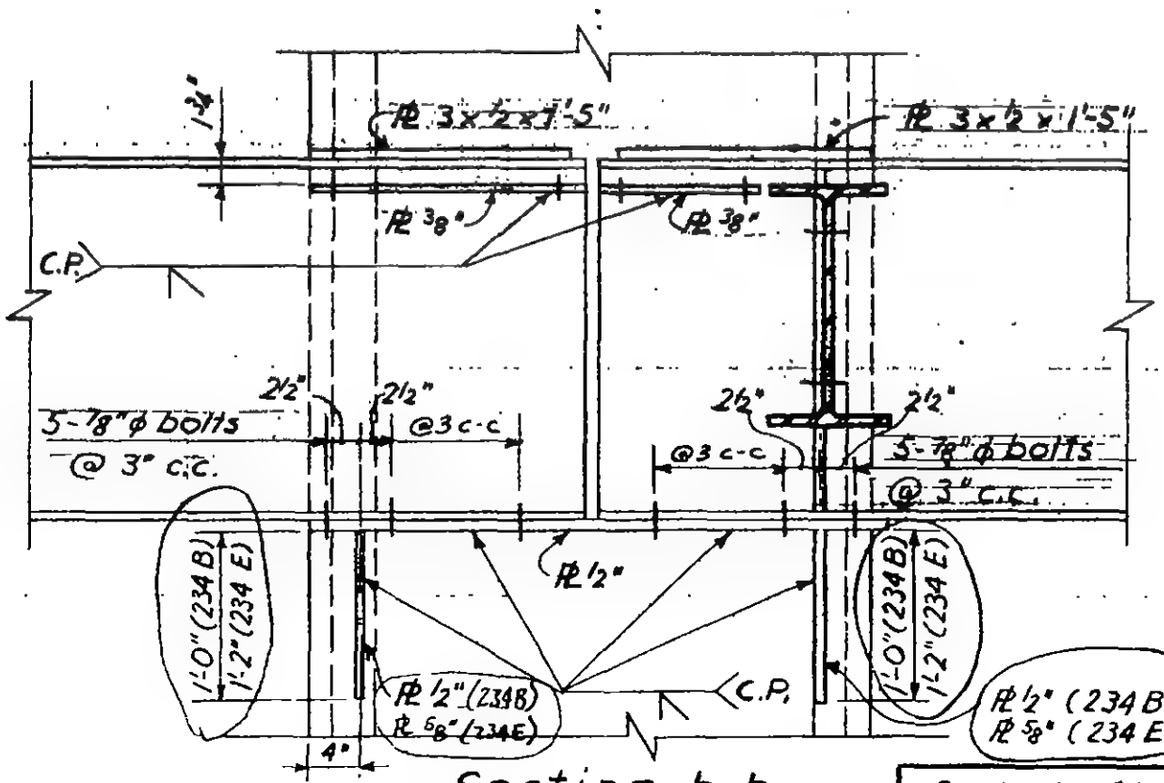

Section b-b

6-AB1-41.2

LICENSED PROFESSIONAL ENGINEER — LESLIE E. ROBERTSON — No. 34360 — UNIVERSITY OF THE STATE OF NEW YORK

SKILLING - HELLE - CHRISTIANSEN - ROBERTSON Structural & Civil Engineers

PROJECT THE WORLD TRADE CENTER | TITLE CONNECTION DETAIL 234 C, D | DATE 2-8-68

REVISIONS

3-11-68

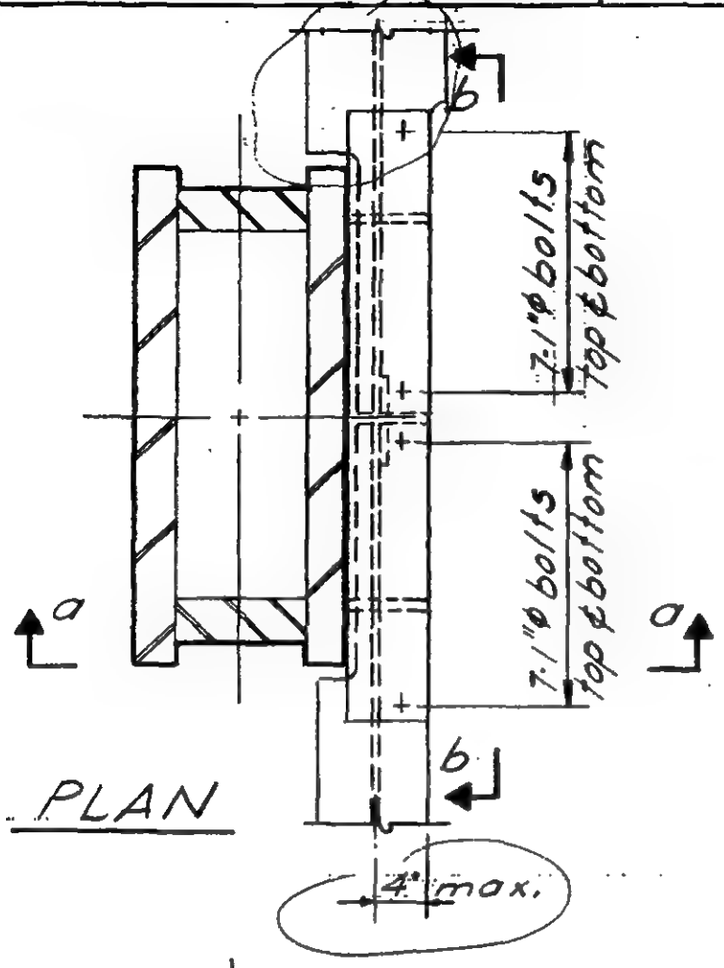

PLAN

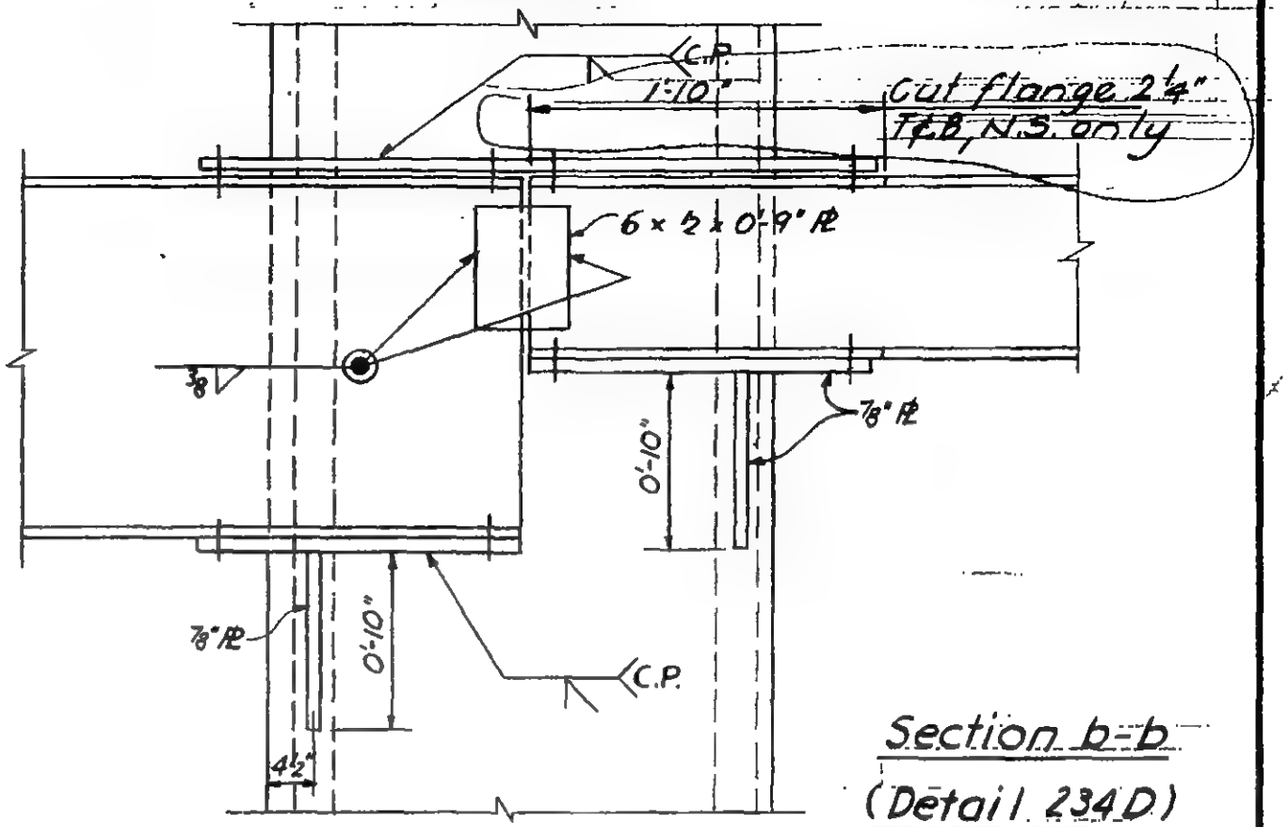

Section b-b
(Detail 234D)

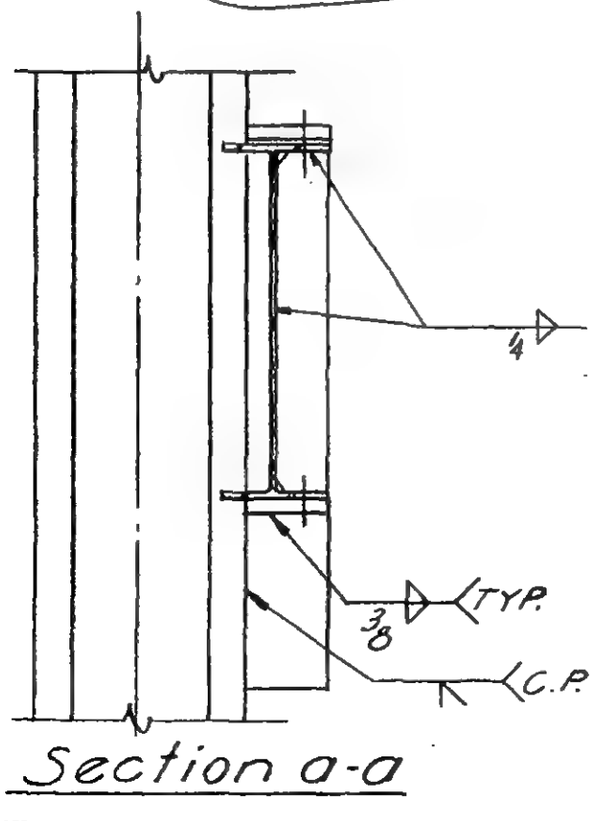

Section a-a

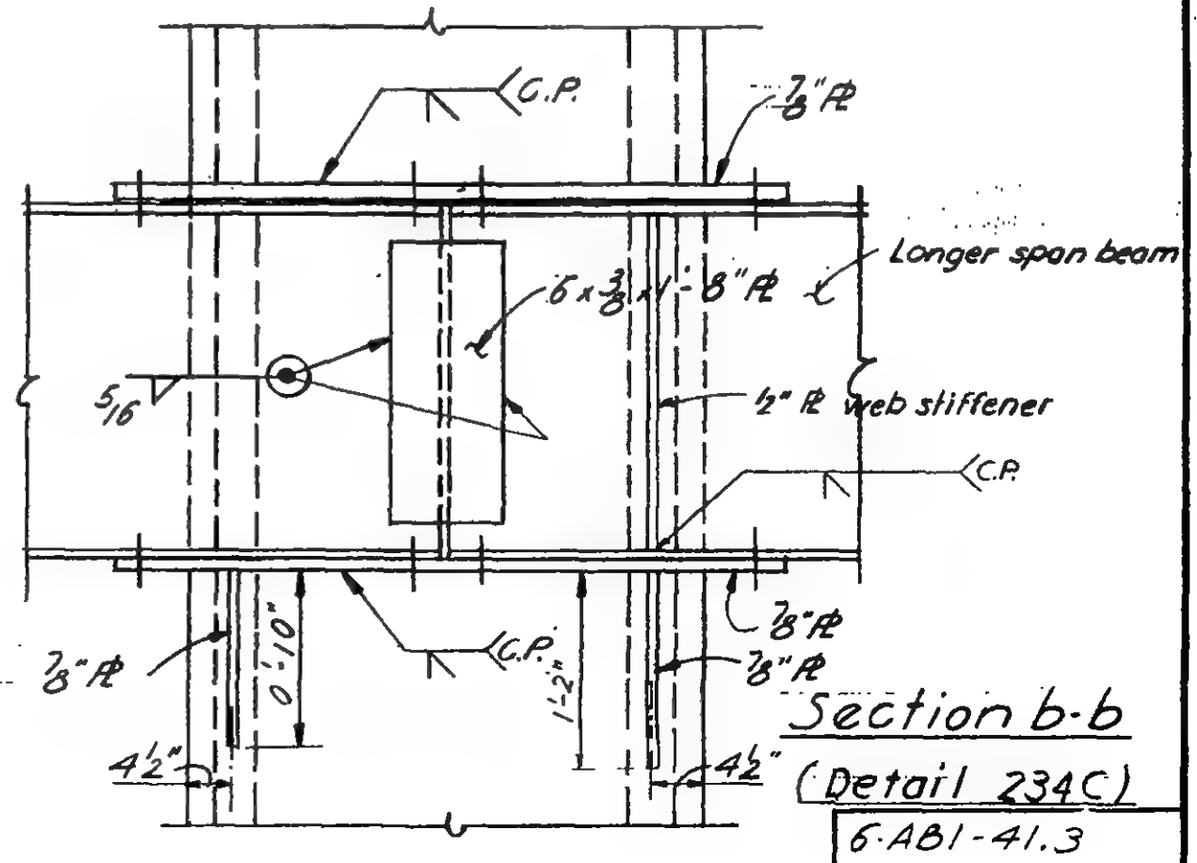

Section b-b
(Detail 234C)

LICENSED PROFESSIONAL ENGINEER
LESLIE E. ROBERTSON
No. 34360
UNIVERSITY OF THE STATE OF NEW YORK

6-AB1-41.3

SKILLING - HELLE - CHRISTIANSEN - ROBERTSON Structural & Civil Engineers

PROJECT THE WORLD TRADE CENTER | TITLE CONNECTION DETAIL 2346 | DATE 2-9-68

REVISIONS

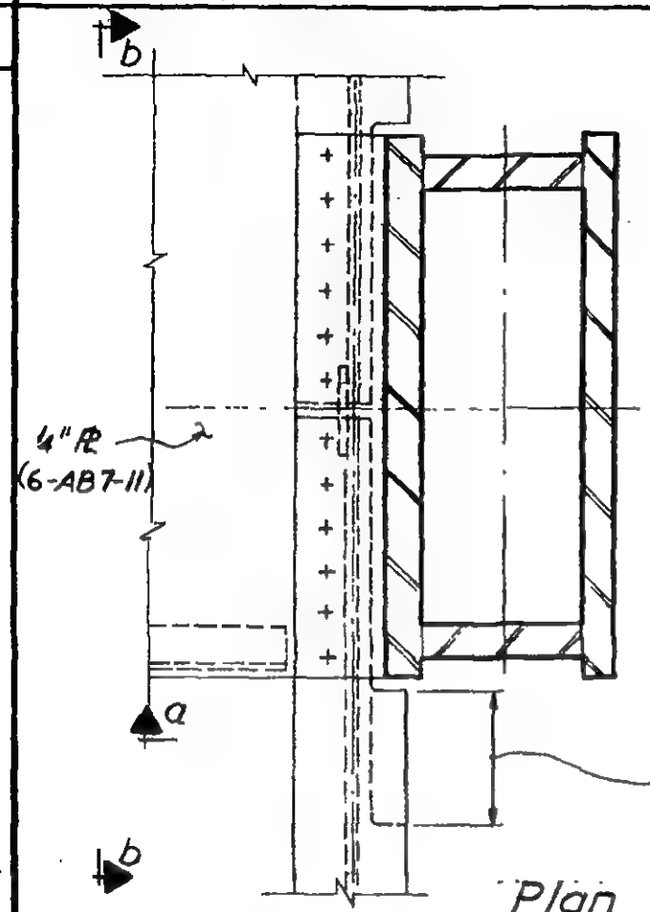

Plan

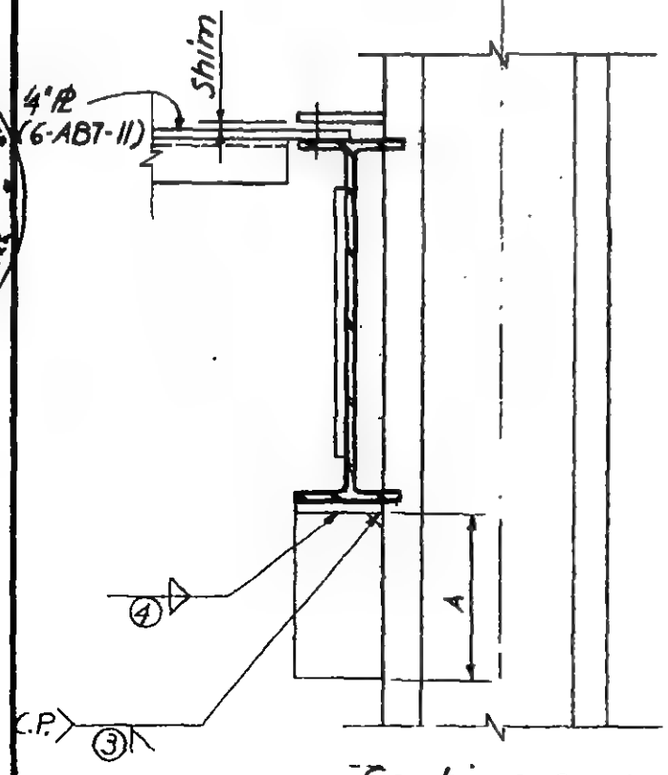

Section a-a

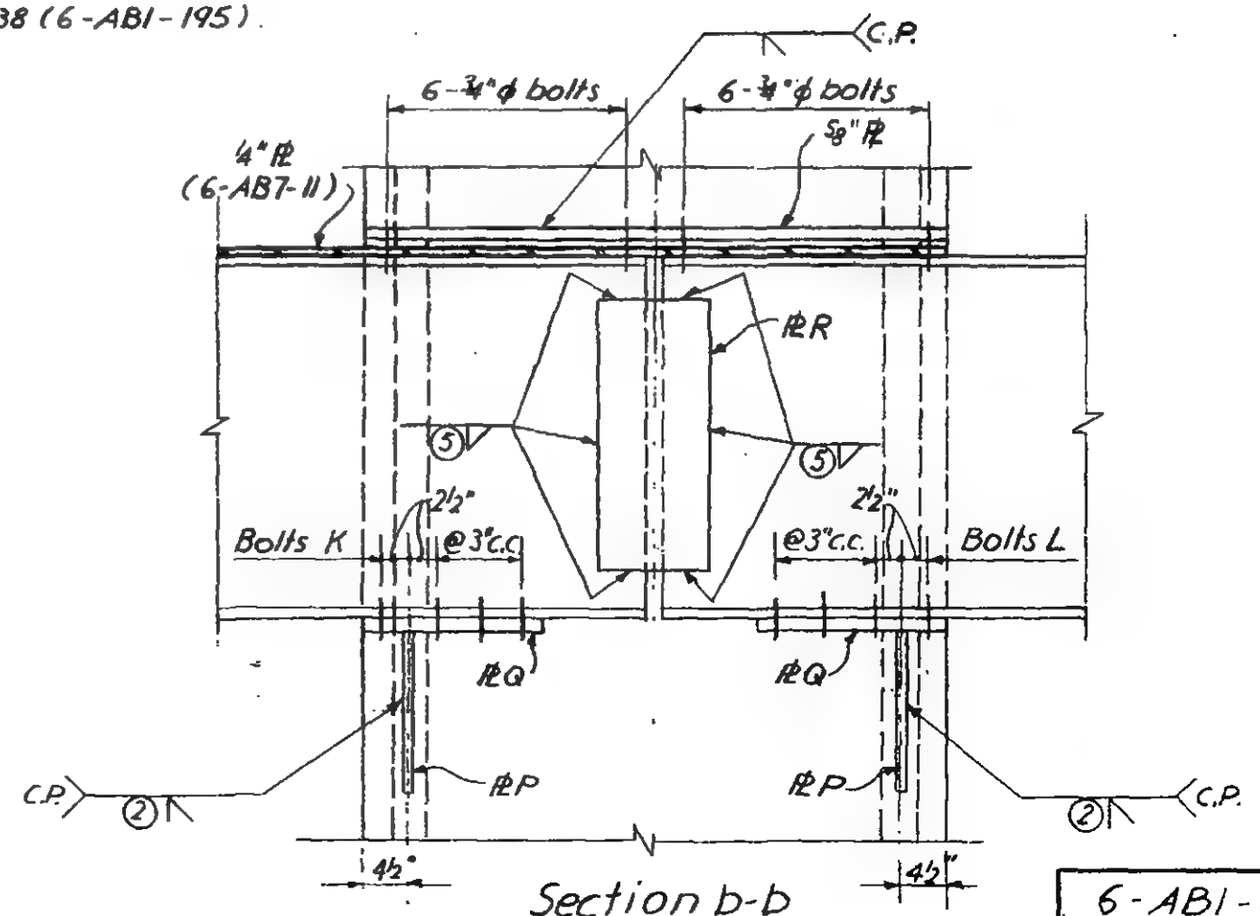

Section b-b

6-AB1-41.4

LICENSED PROFESSIONAL ENGINEER LESLIE E. ROBERTSON No. 34360 LICENSED BY THE STATE OF NEW YORK

WORTHINGTON, SKILLING, HELLE & JACKSON — Civil & Structural Engineers

PROJECT	TITLE	DATE
THE WORLD TRADE CENTER	CONNECTION DETAIL 235 A-F	5-1-67

REVISIONS
- 10-30-67
- 11-28-67
- 11-29-67
- 12-21-67

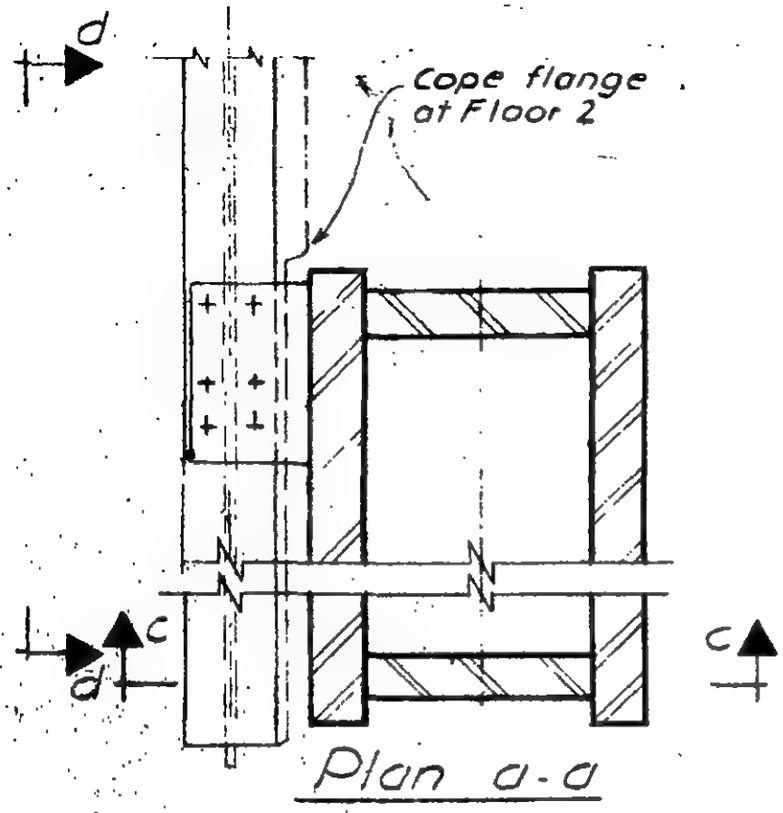

Plan a-a

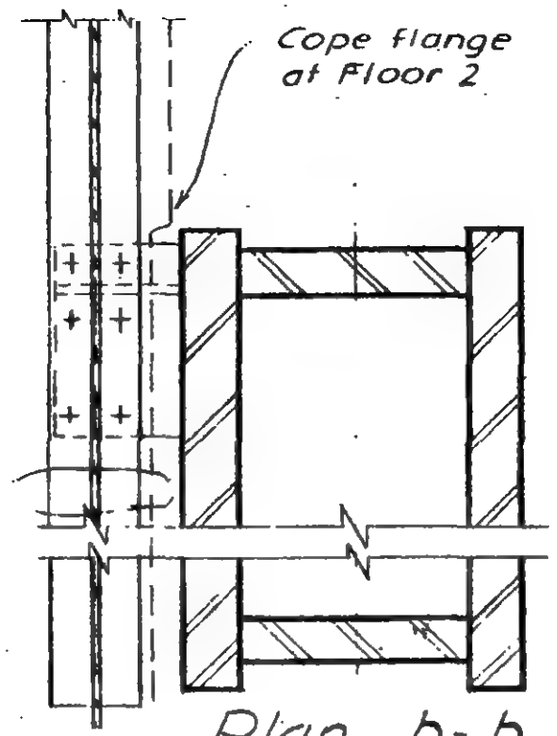

Plan b-b

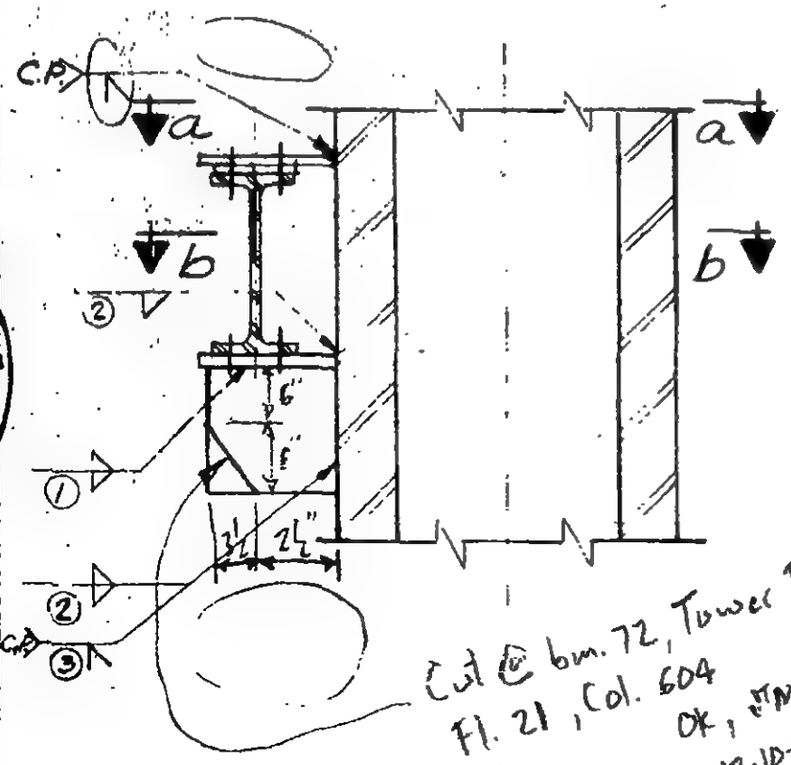

Cut @ bm. 72, Tower B, Fl. 21, Col. 604 OK, JTM 12-10-74

Section c-c

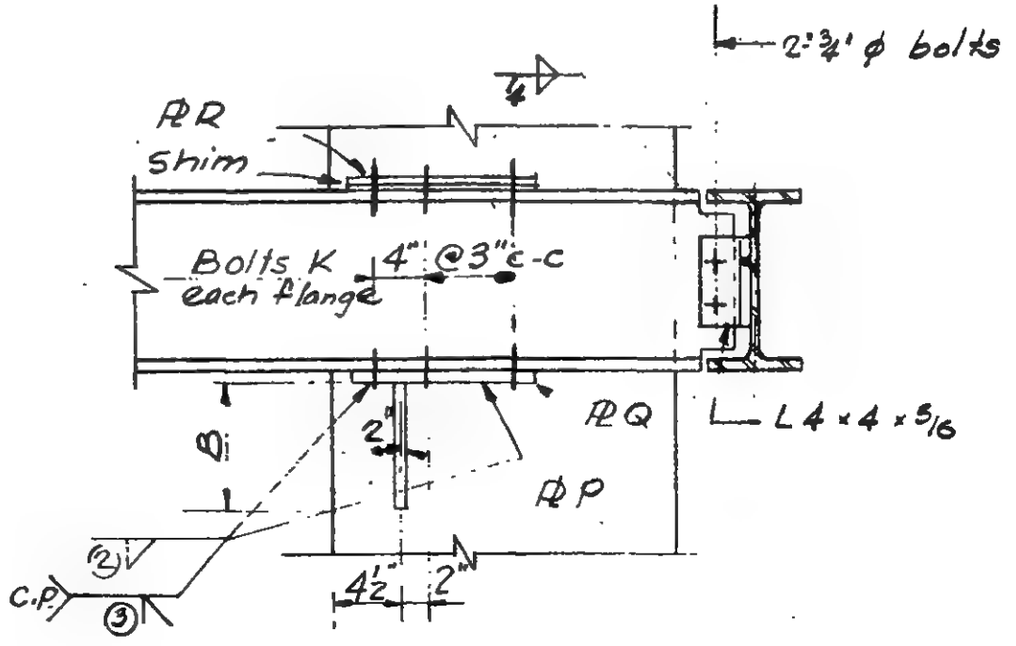

Section d-d

6-AB1-42

WORTHINGTON, SKILLING, HELLE & JACKSON — Civil & Structural Engineers

PROJECT: THE WORLD TRADE CENTER | TITLE: CONNECTION DETAIL 235 A-F. | DATE: 5-1-67

REVISIONS
6-30-67
7-28-67
9-29-67
12-21-67

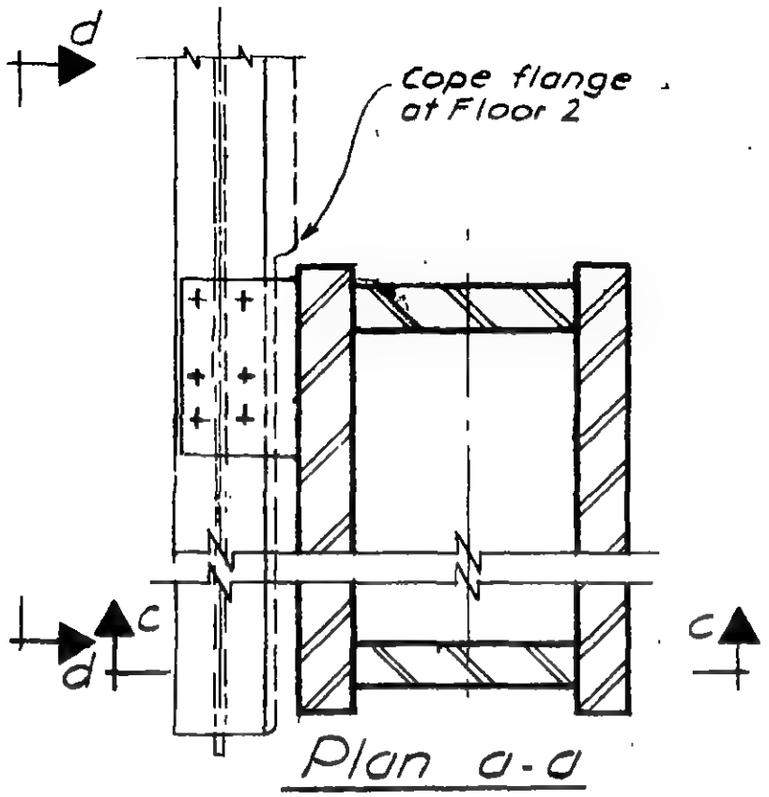

Plan a-a

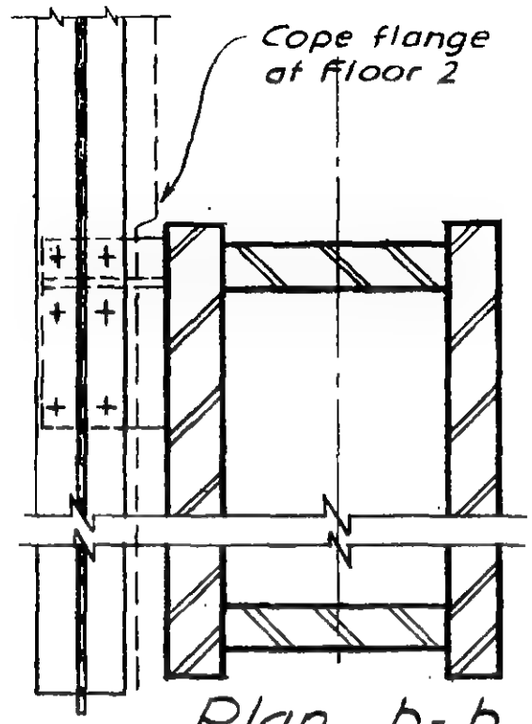

Plan b-b

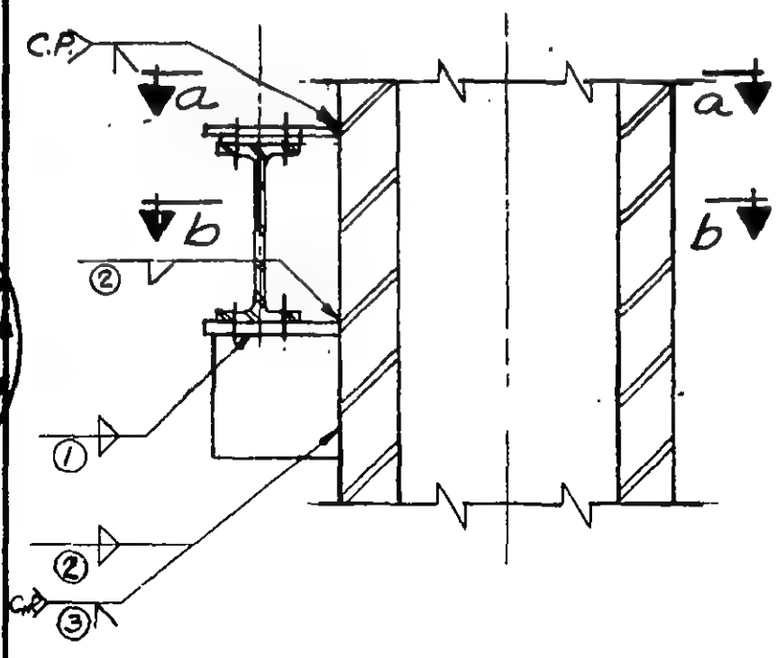

Section c-c

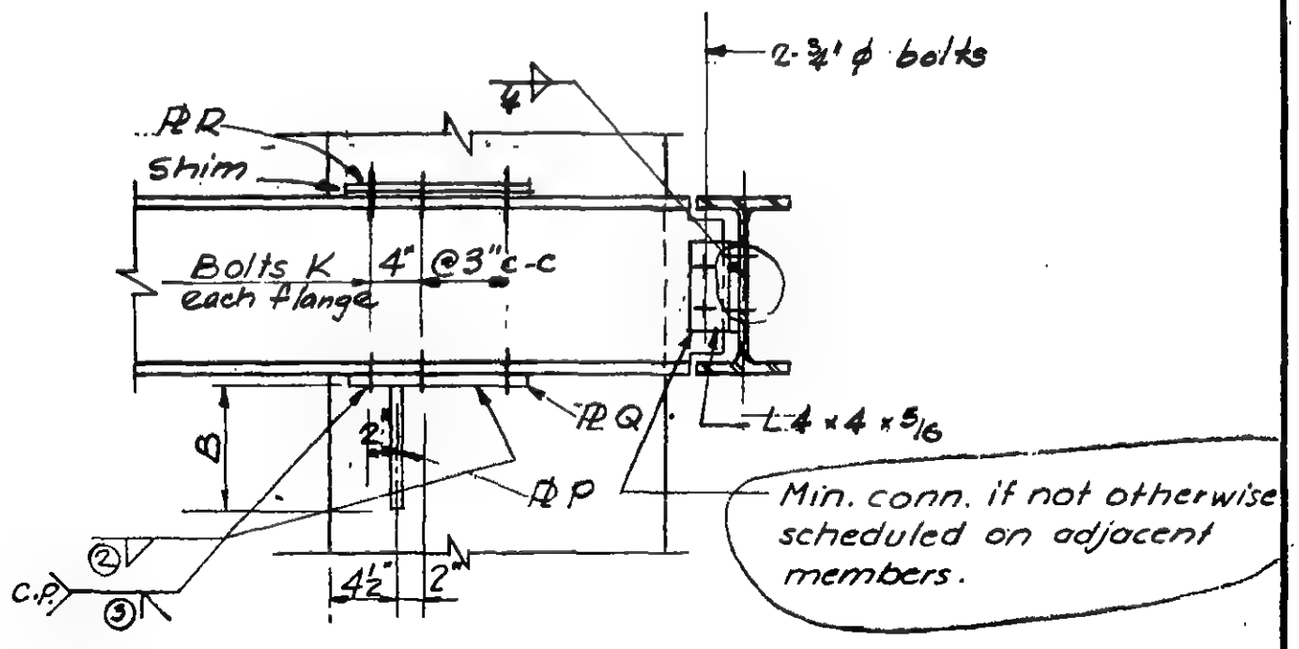

Section d-d

6-AB1-42

LICENSED PROFESSIONAL ENGINEER — LESLIE E. ROBERTSON — No. 34260 — STATE OF NEW YORK

SKILLING - HELLE - CHRISTIANSEN - ROBERTSON Structural & Civil Engineers

PROJECT THE WORLD TRADE CENTER | TITLE SCHEDULE FOR DETAIL 235 A-F | DATE 6-30-67

REVISIONS
7-28-67
12-21-67

	235 A	235 B	235 C	235 D	235 E	235 F
PLATES						
P	3/8"	7/16"	1/2"	1/2"	5/8"	5/8"
Q	3/8"	7/16"	5/8"	1/2"	3/4"	5/8"
R	3/8"	7/16"	5/8"	1/2"	3/4"	5/8"
DIMENSIONS						
B	1'-0"	1'-2"	1'-0"	1'-0"	1'-2"	1'-4"
BOLTS						
K	6 - 3/4" ϕ	6 - 3/4" ϕ	6 - 3/4" ϕ	6 - 3/4" ϕ	10 - 7/8" ϕ	6 - 3/4" ϕ
WELDS						
①	1/4	1/4	5/16	5/16	3/8	3/8
②	3/8	7/16	—	—	—	—
③	—	—	C.P.	C.P.	C.P.	C.P.

LICENSED PROFESSIONAL ENGINEER
LESLIE E. ROBERTSON
No. 34360
UNIVERSITY OF THE STATE OF NEW YORK

6-AB1-42.1

SKILLING - HELLE - CHRISTIANSEN - ROBERTSON — Structural & Civil Engineers

PROJECT THE WORLD TRADE CENTER | TITLE CONNECTION DETAIL 236A | DATE 6-30-67

REVISIONS
10-5-67

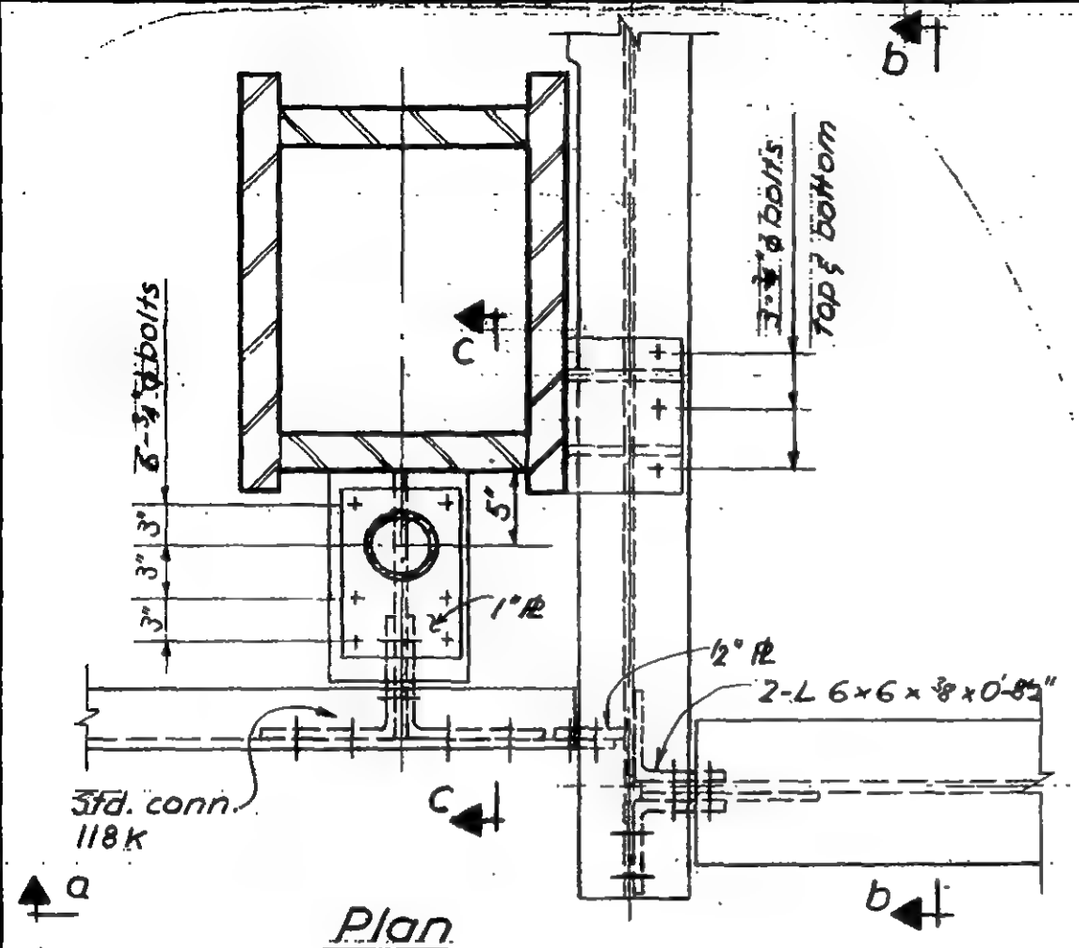

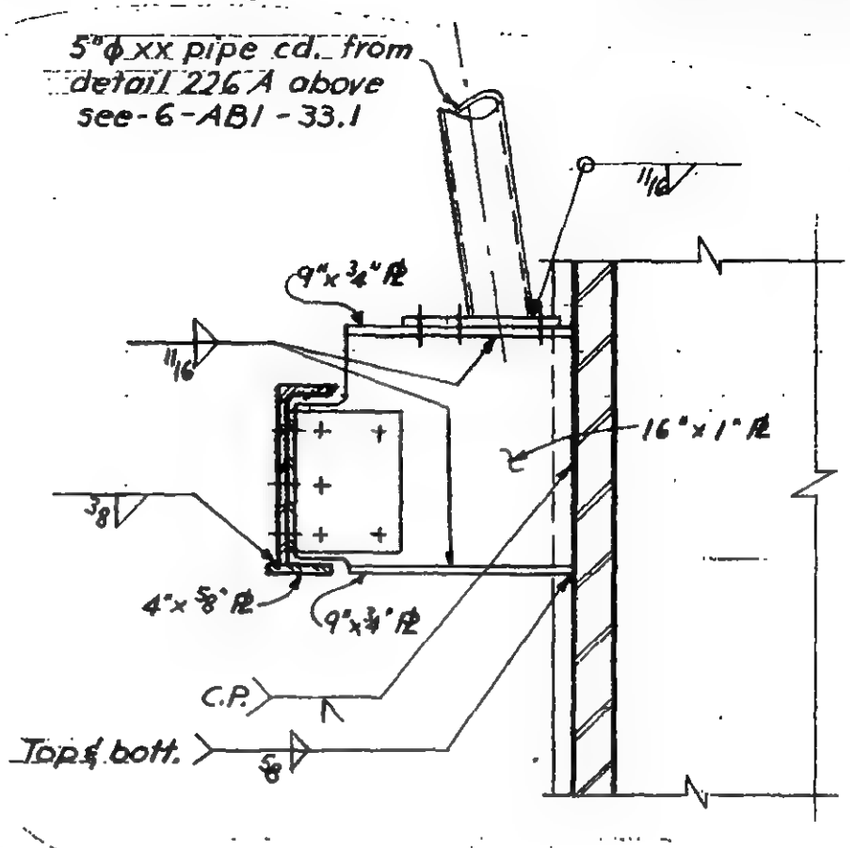

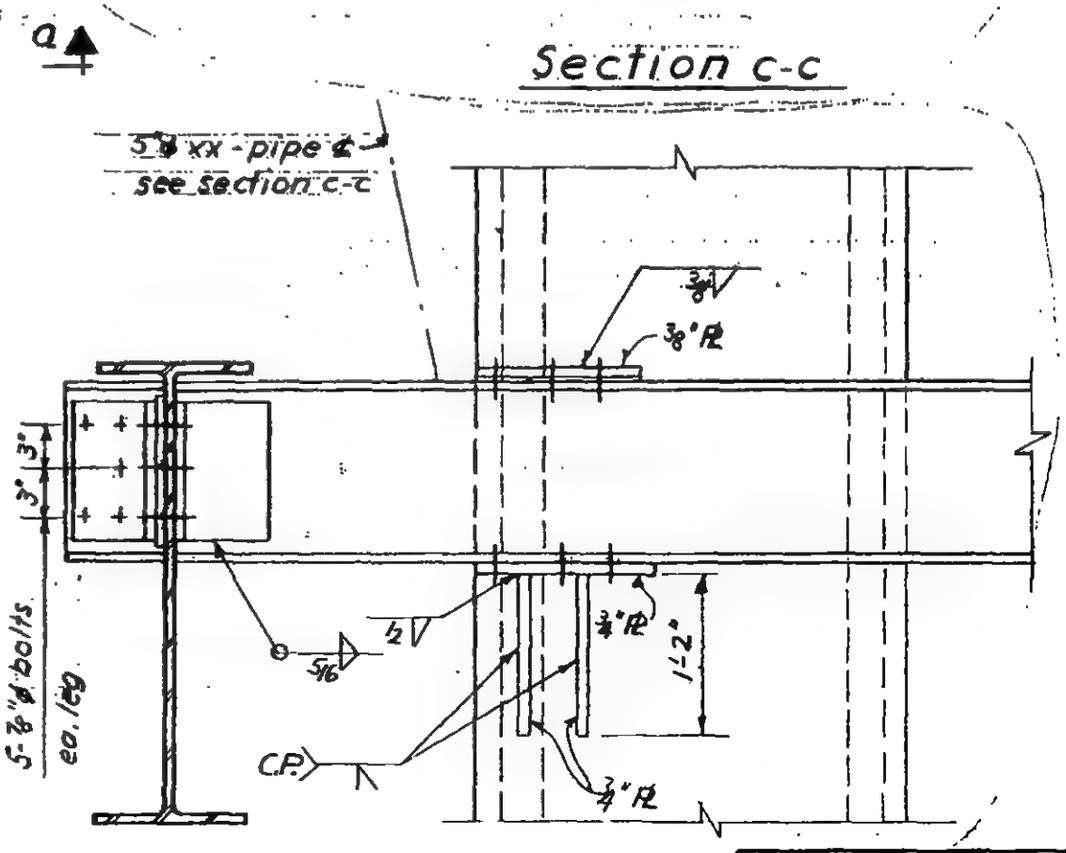

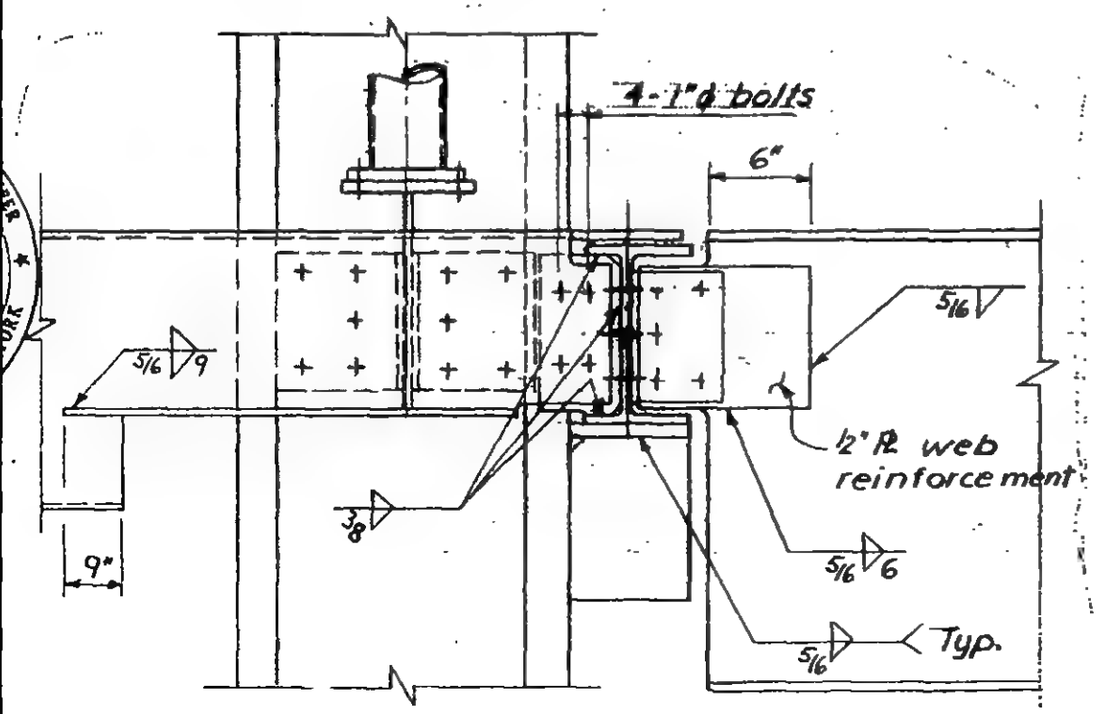

Section a-a

Section b-b

6-ABI-43

LICENSED PROFESSIONAL ENGINEER
LESLIE E. ROBERTSON
No. 34360
UNIVERSITY OF THE STATE OF NEW YORK

WORTHINGTON, SKILLING, HELLE & JACKSON — Civil & Structural Engineers

PROJECT THE WORLD TRADE CENTER | TITLE CONNECTION DETAIL 237 A, B | DATE 5-22-67

REVISIONS

8-14-67

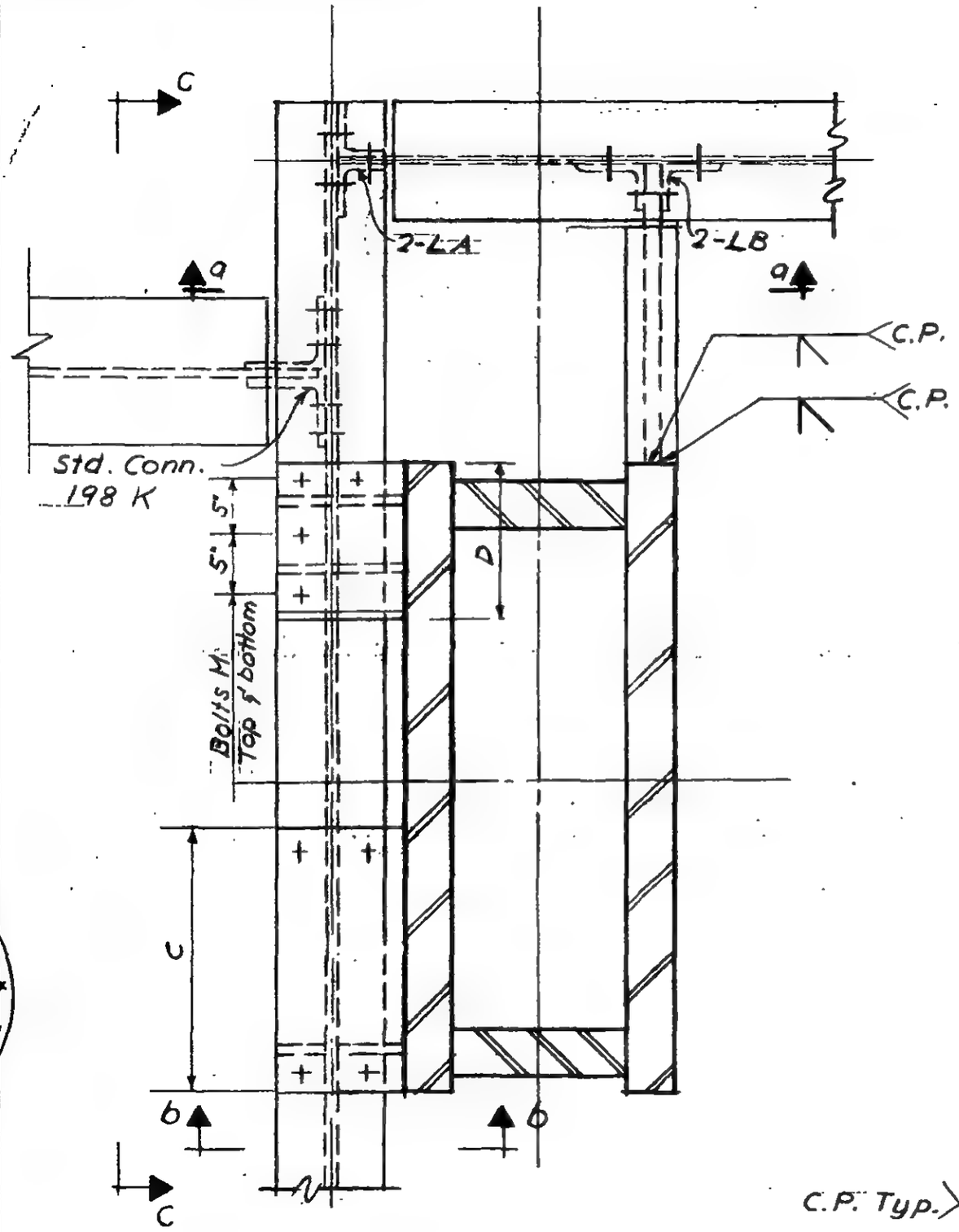

Plan

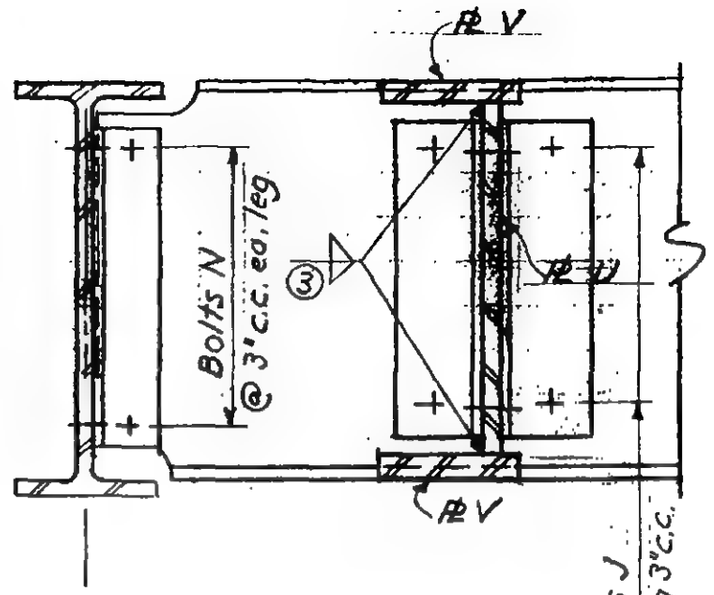

Section a-a

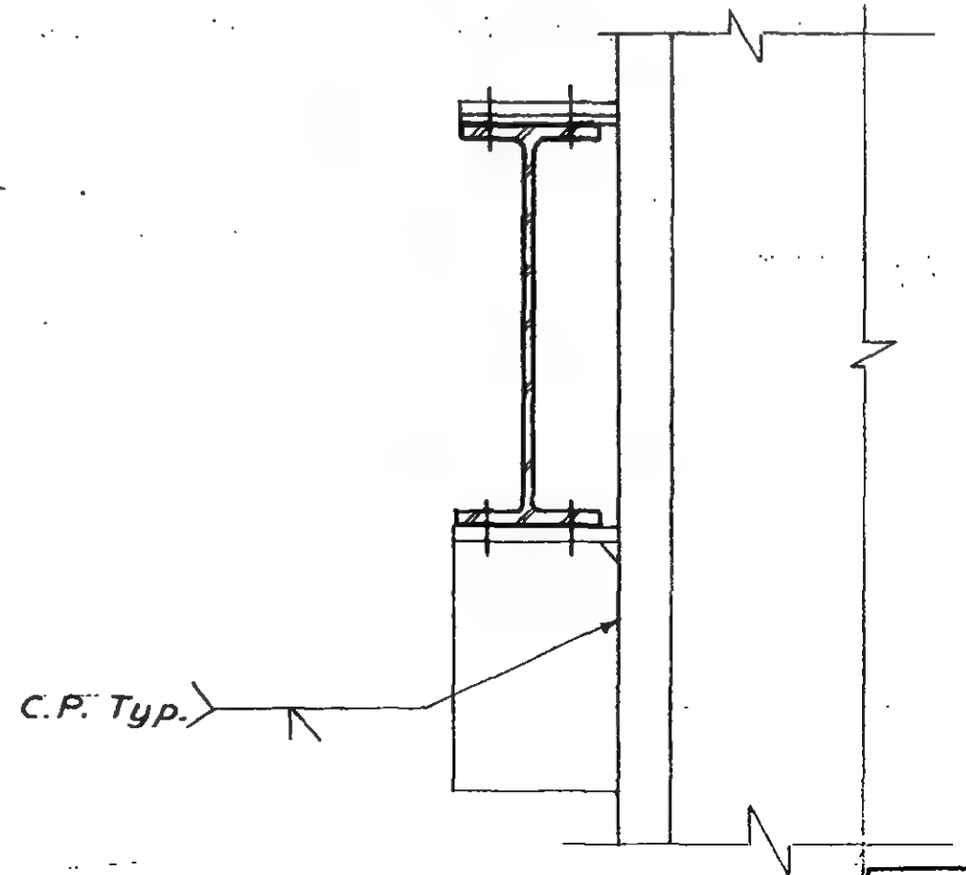

Section b-b

G-ABI-44

LICENSED PROFESSIONAL ENGINEER
LESLIE E. ROBERTSON
No. 34360
UNIVERSITY OF THE STATE OF NEW YORK

SKILLING - HELLE - CHRISTIANSEN - ROBERTSON — Structural & Civil Engineers

PROJECT: THE WORLD TRADE CENTER | TITLE: CONNECTION DETAIL 237 A B | DATE: 8-14-67

REVISIONS

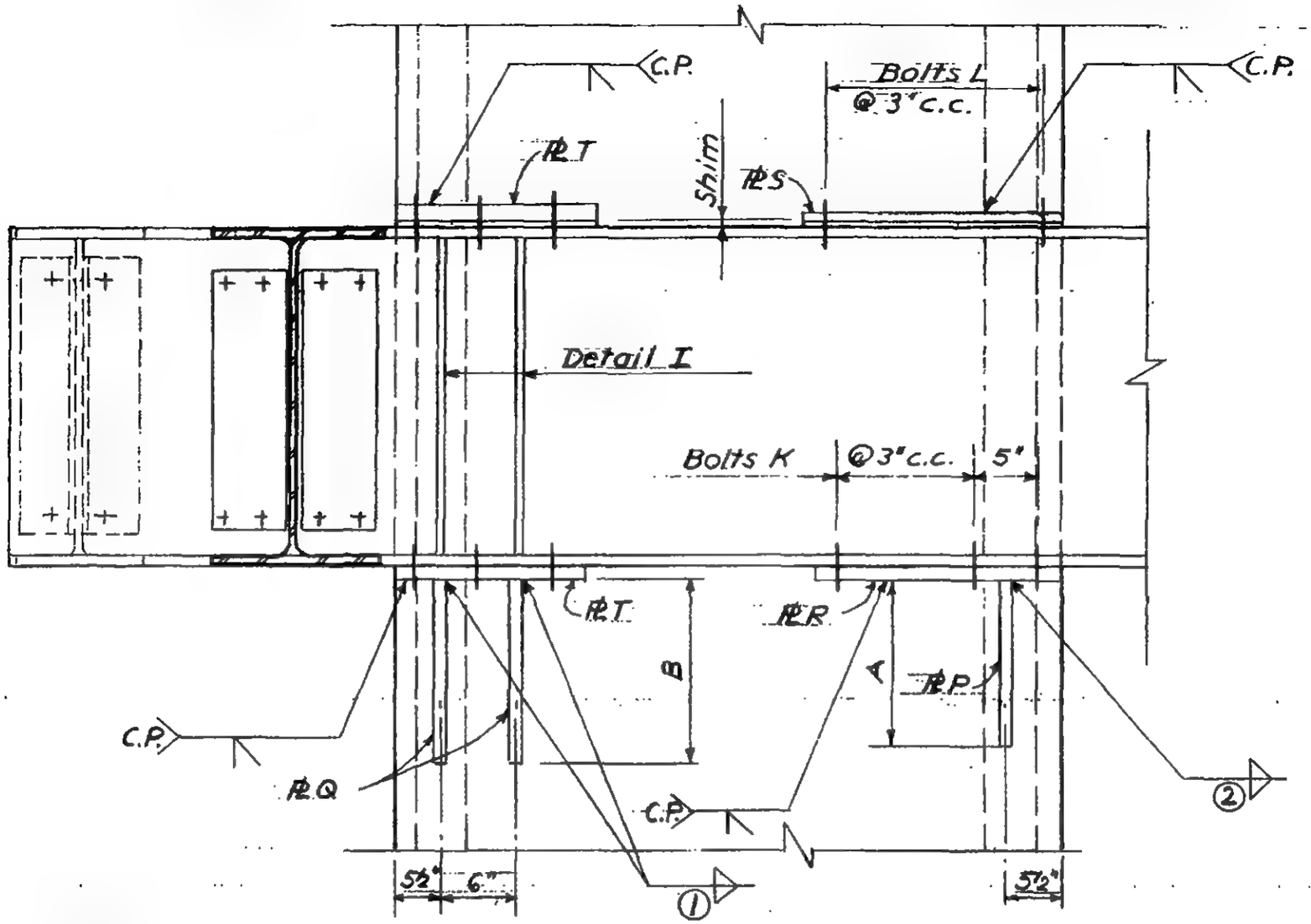

Section c-c

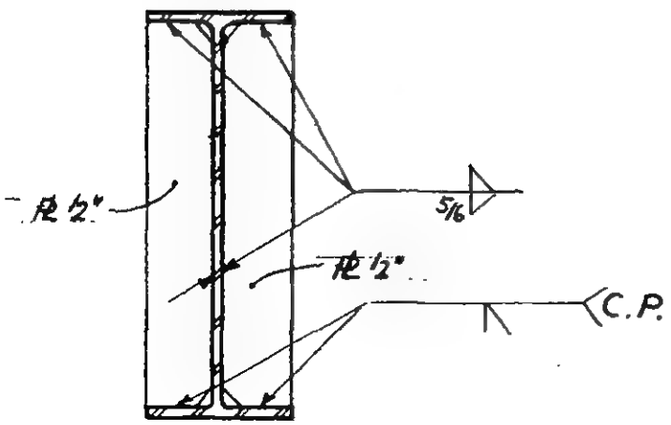

Detail I

LICENSED PROFESSIONAL ENGINEER
LESLIE E. ROBERTSON
No. 34360
UNIVERSITY OF THE STATE OF NEW YORK

6-AB1-44.1

SKILLING - HELLE - CHRISTIANSEN - ROBERTSON Structural & Civil Engineers

PROJECT THE WORLD TRADE CENTER | TITLE SCHEDULE FOR DETAIL 237 A, B, C, D, E & F | DATE 8-14-67

REVISIONS
10-7-67
2-9-68

	237A	237B	237C & D	237E	237F
PLATES					
P	1"	1"	3/4"	1"	1"
Q	1"	1"	1"	1"	1"
R	1"	1"	—	1"	1"
S	1"	1"	3/4"	5/8"	5/8"
T	1"	1"	1"	—	—
U	1/2"	1/2"	3/4"	1/2"	1/2"
V	1"	1 1/2"	1 1/2"	1 1/2"	1"
DIMENSIONS					
A	1'-4"	1'-4"	1'-2"	1'-4"	1'-4"
B	1'-6"	1'-6"	1'-6"	1'-6"	1'-6"
C	1'-10"	1'-10"	—	—	—
D	1'-5"	1'-5"	—	—	—
ANGLES					
A	4 x 3 1/2 x 5/16 x 1'-8 1/2"	4 x 3 1/2 x 5/16 x 1'-8 1/2"	Standard	4 x 3 1/2 x 7/16 x 0'-11 1/2"	4 x 3 1/2 x 5/16 x 1'-8 1/2"
B	4 x 3 1/2 x 5/16 x 1'-8 1/2"	4 x 3 1/2 x 7/16 x 0'-11 1/2"	connections	4 x 3 1/2 x 7/16 x 0'-11 1/2"	4 x 3 1/2 x 5/16 x 1'-8 1/2"
BOLTS					
J	7 - 3/4" ϕ	4 - 1" ϕ	1"	4 - 1" ϕ	7 - 3/4" ϕ
K	10 - 1" ϕ	10 - 1" ϕ	10 - 18" ϕ A490	15 - 3/4" ϕ	15 - 3/4" ϕ
L	10 - 1" ϕ	10 - 1" ϕ	—	16 - 3/4" ϕ	16 - 3/4" ϕ
M	4 - 1" ϕ	4 - 1" ϕ	—	—	—
N	7 - 3/4" ϕ	7 - 3/4" ϕ	—	4 - 1" ϕ	7 - 3/4" ϕ
WELDS					
①	5/16	5/16	1/2	5/16	5/16
②	5/16	5/16	3/8	5/16	5/16
③	1/2	1/2	3/8	1/2	1/2

LICENSED PROFESSIONAL ENGINEER LESLIE E. ROBERTSON No. 34360 UNIVERSITY OF THE STATE OF NEW YORK

6-ABI-44.2

SKILLING - HELLE - CHRISTIANSEN - ROBERTSON Structural & Civil Engineers

PROJECT THE WORLD TRADE CENTER | TITLE CONNECTION DETAIL 237 C & D | DATE 10-2-67

REVISIONS

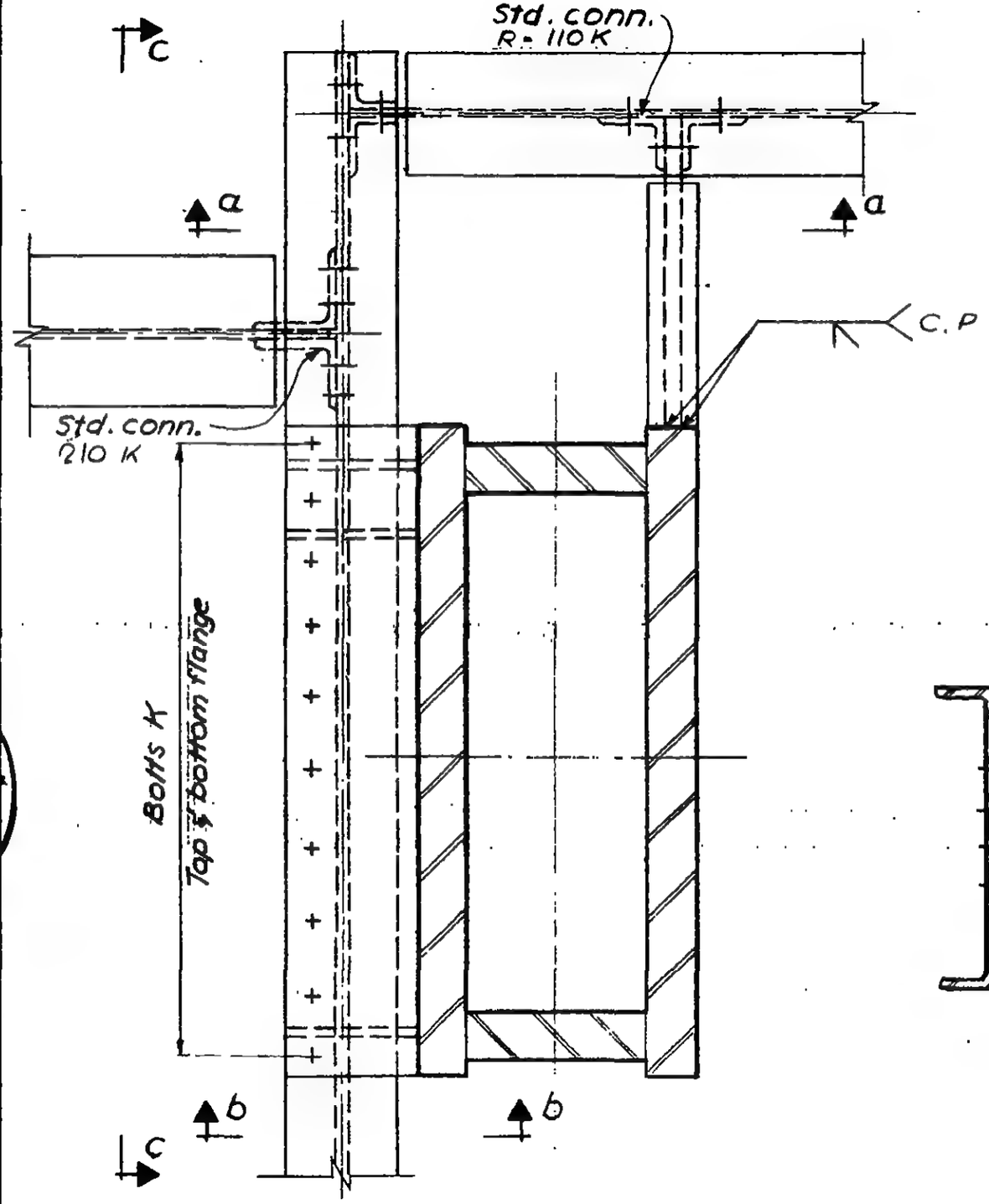

Plan

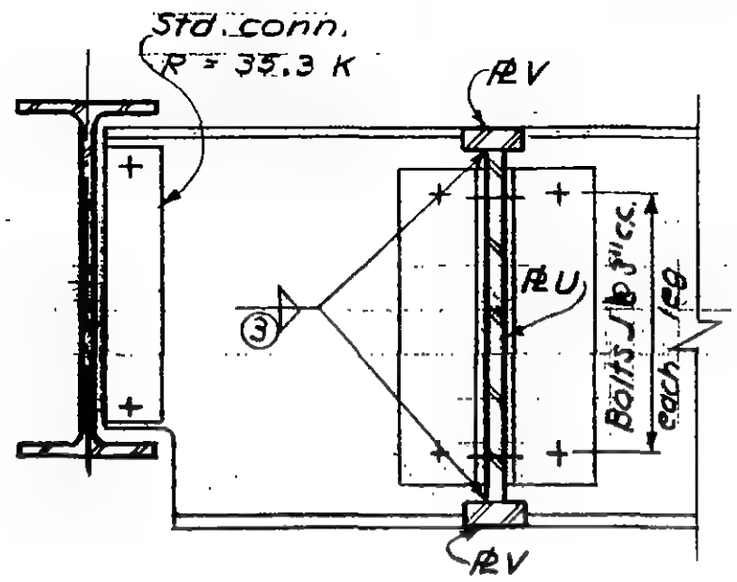

Section a-a
Detail 237 C only

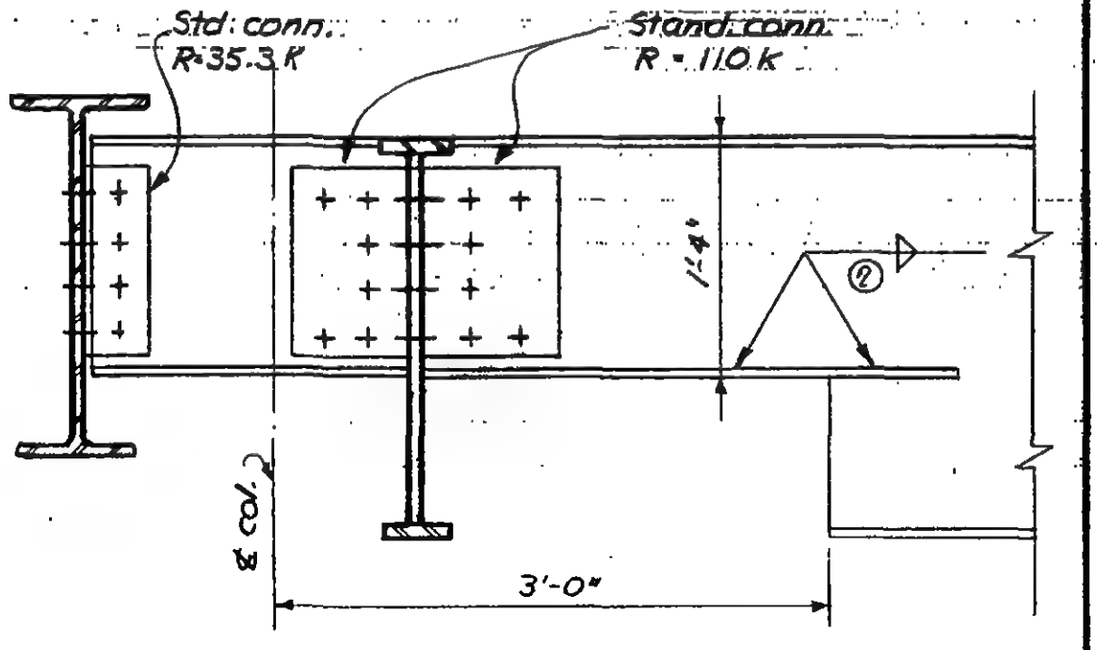

Section a-a
Detail 237D only

6-AB1-44.3

LESLIE E. ROBERTSON
No. 34360
UNIVERSITY OF THE STATE OF NEW YORK

SKILLING - HELLE - CHRISTIANSEN - ROBERTSON Structural & Civil Engineers

PROJECT THE WORLD TRADE CENTER | TITLE CONNECTION DETAIL 237 C & D | DATE 10-2-67

REVISIONS

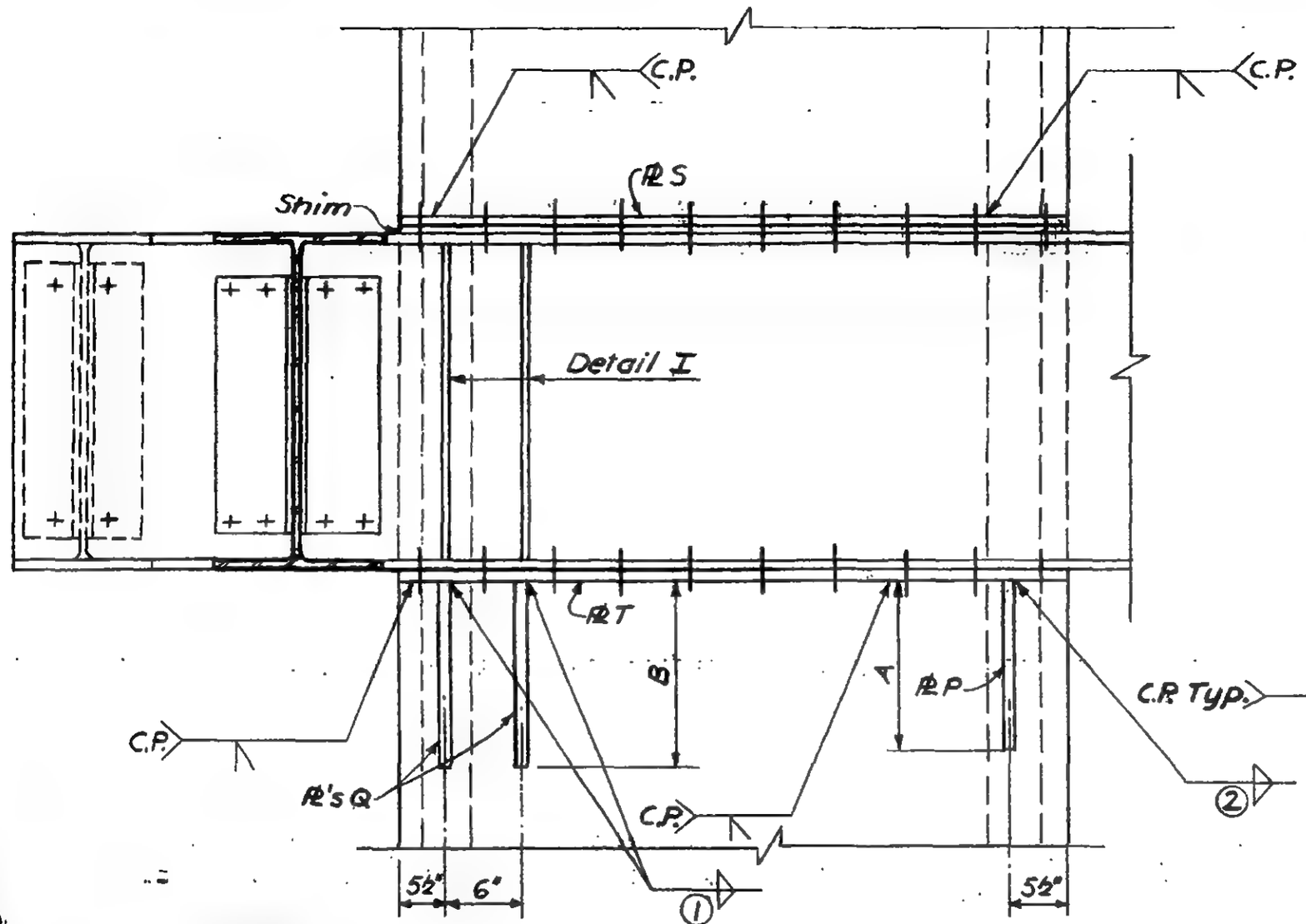

Section c-c

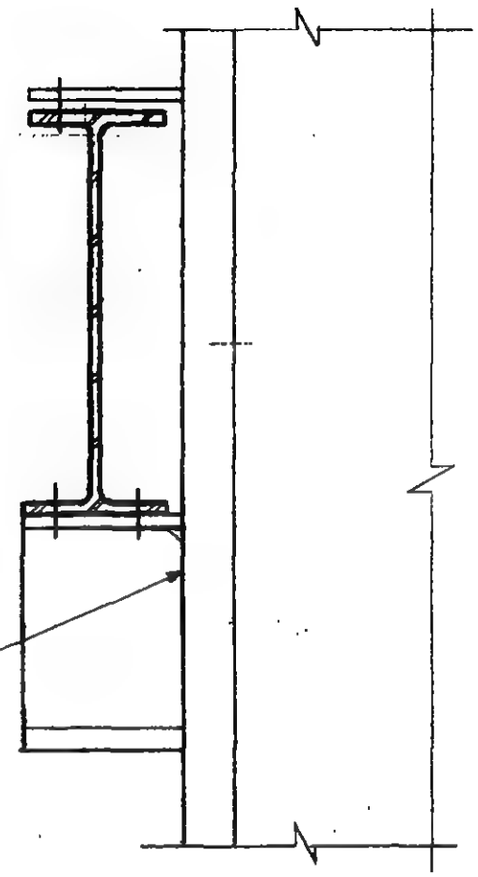

Section b-b

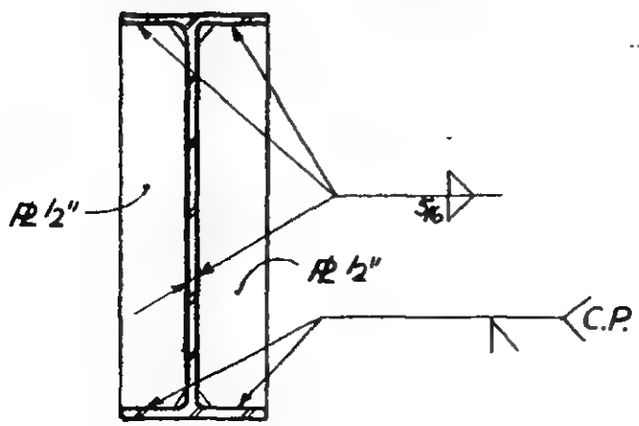

Detail I

REGISTERED PROFESSIONAL ENGINEER
LESLIE E. ROBERTSON
No. 34360
UNIVERSITY OF THE STATE OF NEW YORK

6-ABI-44.4

SKILLING - HELLE - CHRISTIANSEN - ROBERTSON Structural & Civil Engineers

PROJECT THE WORLD TRADE CENTER | TITLE CONNECTION DETAIL 237 E & F | DATE 2-9-68

REVISIONS

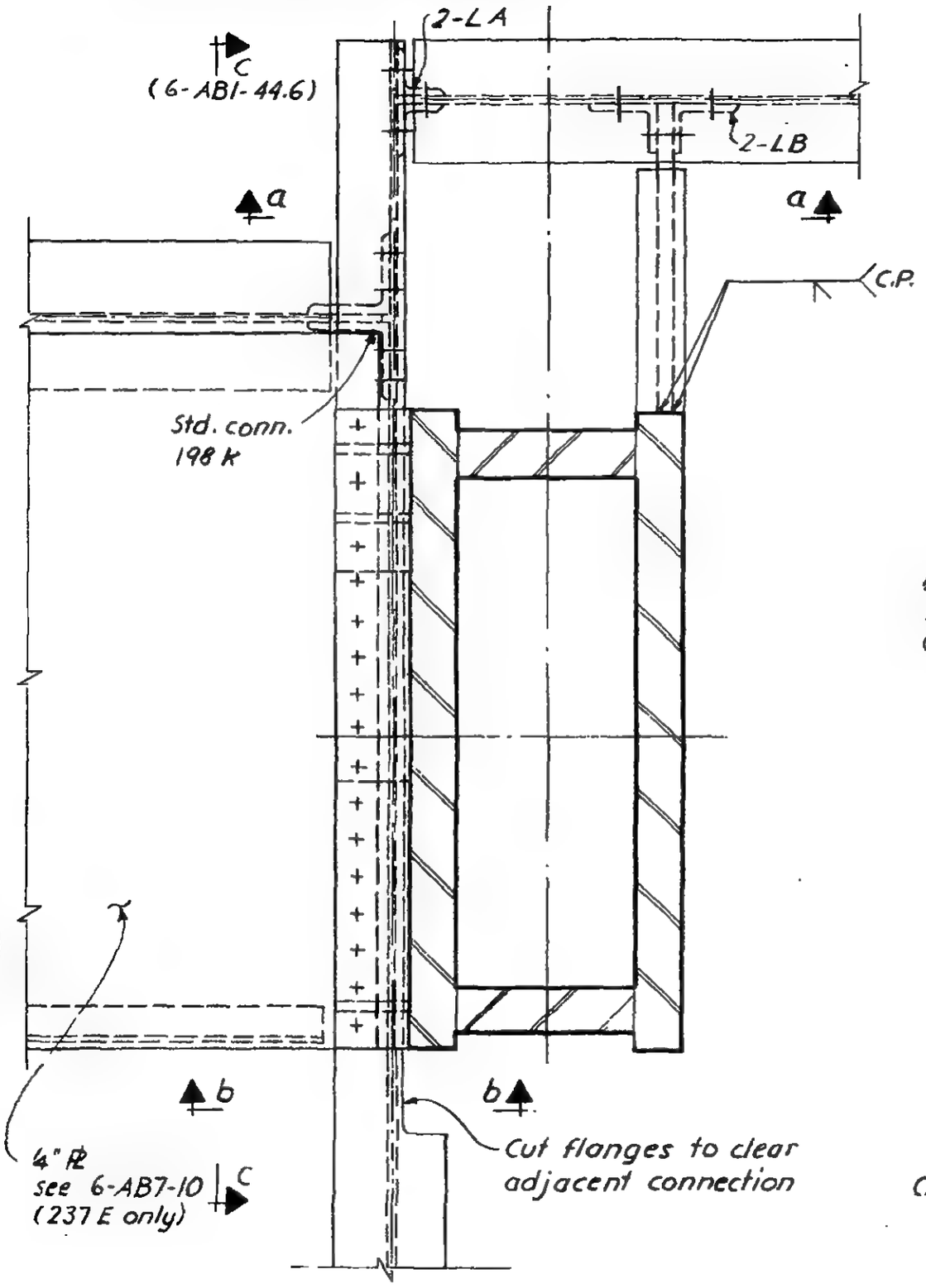

Plan

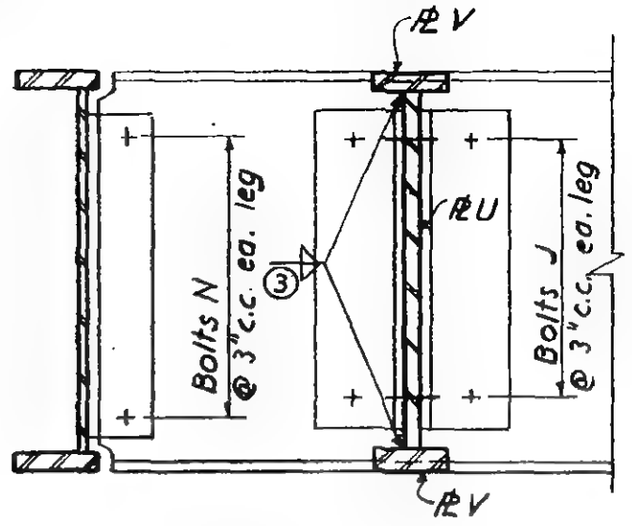

Section a-a

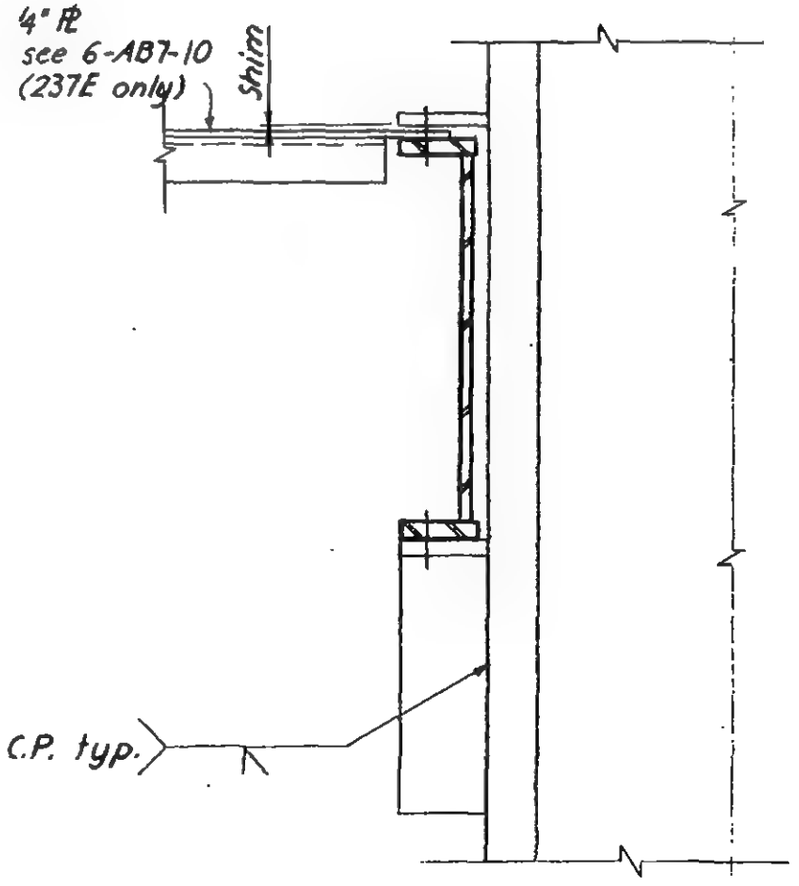

Section b-b

6-ABI-44.5

LICENSED PROFESSIONAL ENGINEER
LESLIE E. ROBERTSON
No. 34360
UNIVERSITY OF THE STATE OF NEW YORK

SKILLING - HELLE - CHRISTIANSEN - ROBERTSON Structural & Civil Engineers

PROJECT THE WORLD TRADE CENTER | TITLE CONNECTION DETAIL 237 E & F | DATE 2-9-68

REVISIONS

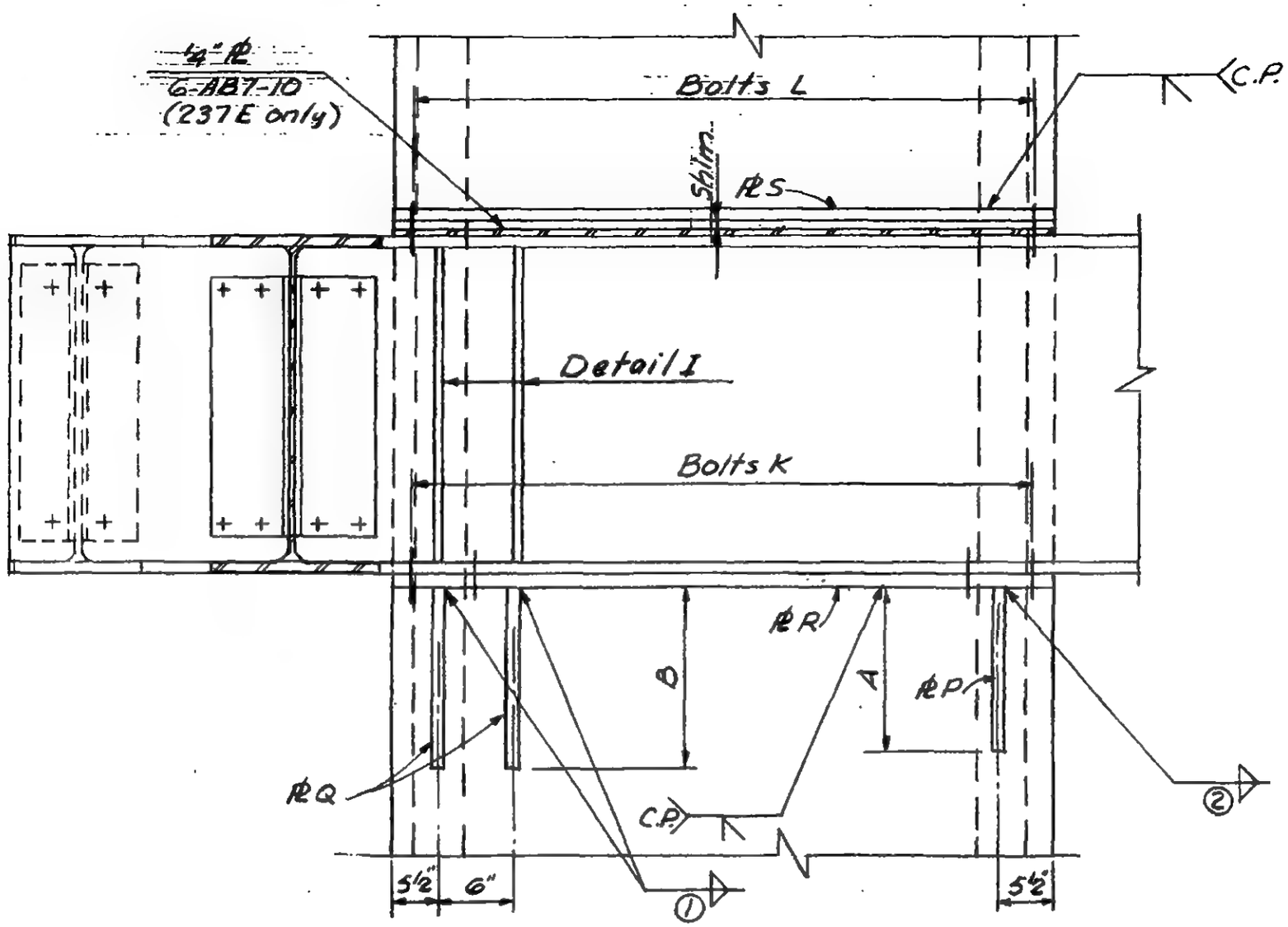

Section C-C

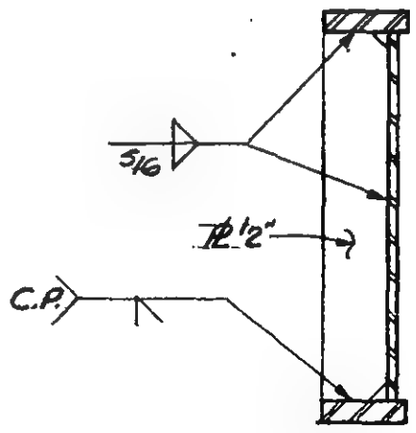

Detail I

LICENSED PROFESSIONAL ENGINEER
LESLIE E. ROBERTSON
No. 34360
UNIVERSITY OF THE STATE OF NEW YORK

6-AB1-44.6

SKILLING, HELLE, CHRISTIANSEN, ROBERTSON — Structural & Civil Engineers

PROJECT: THE WORLD TRADE CENTER | TITLE: CONNECTION DETAIL 237 G, H, I, J | DATE: 9-18-68

REVISIONS

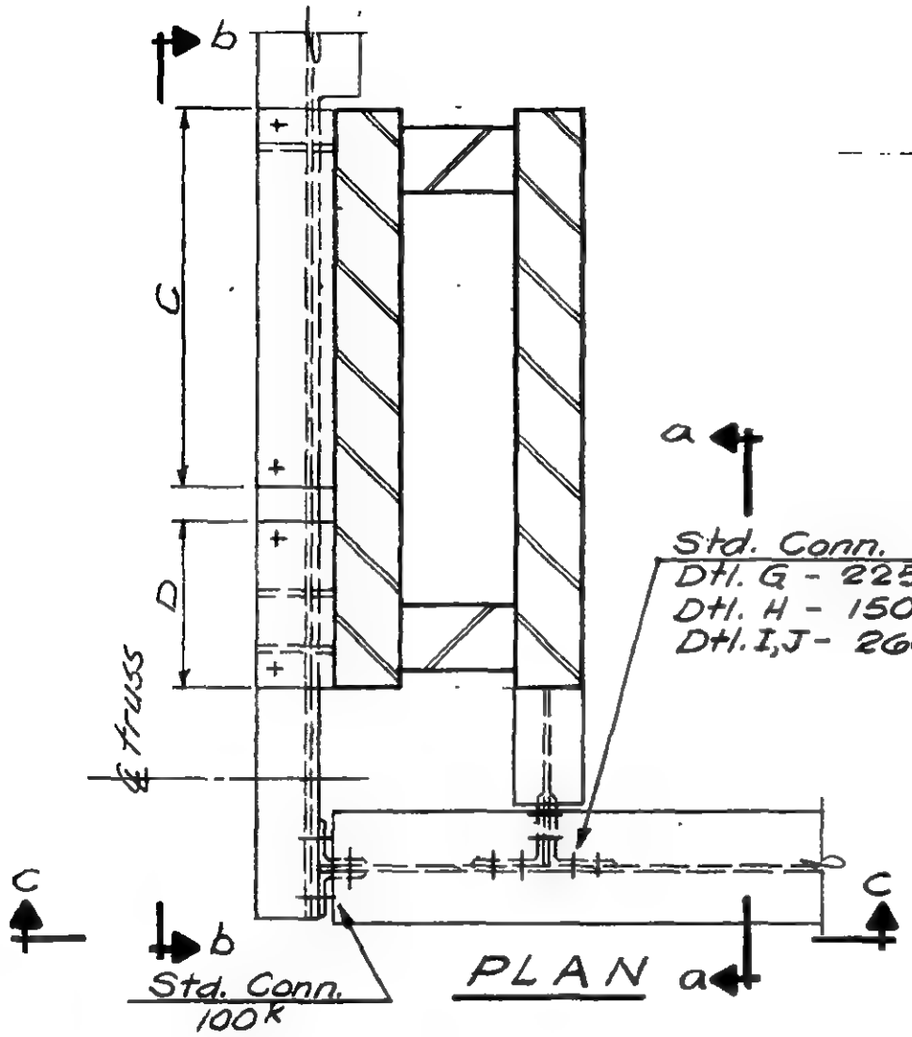

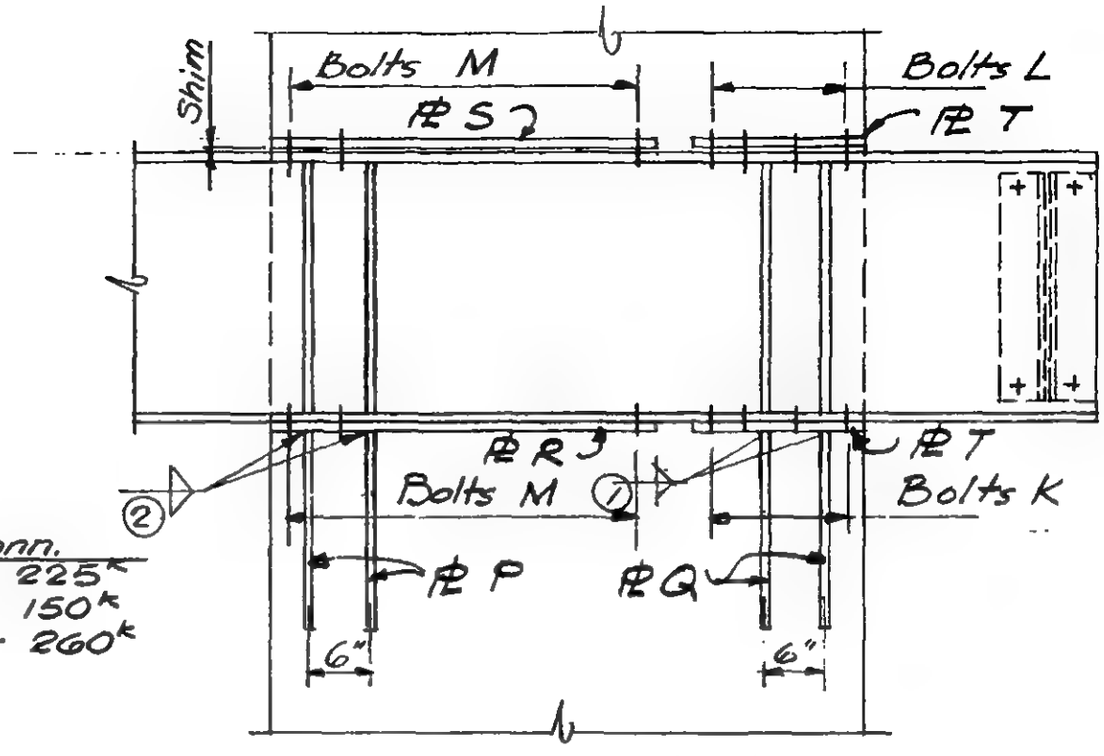

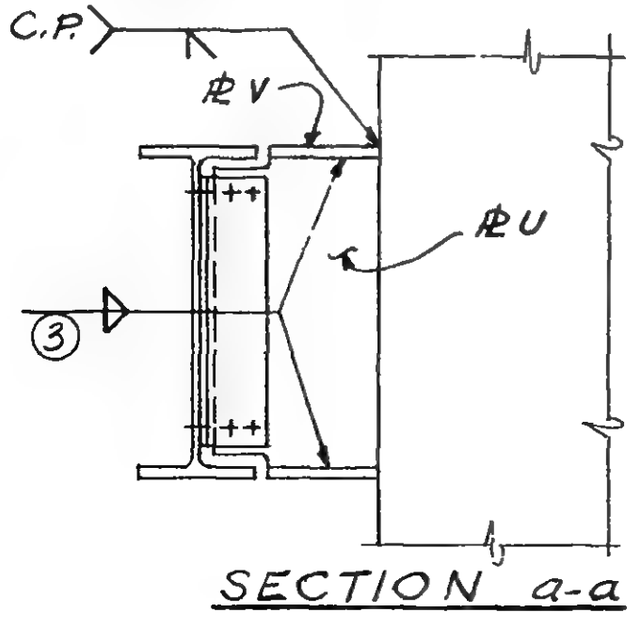

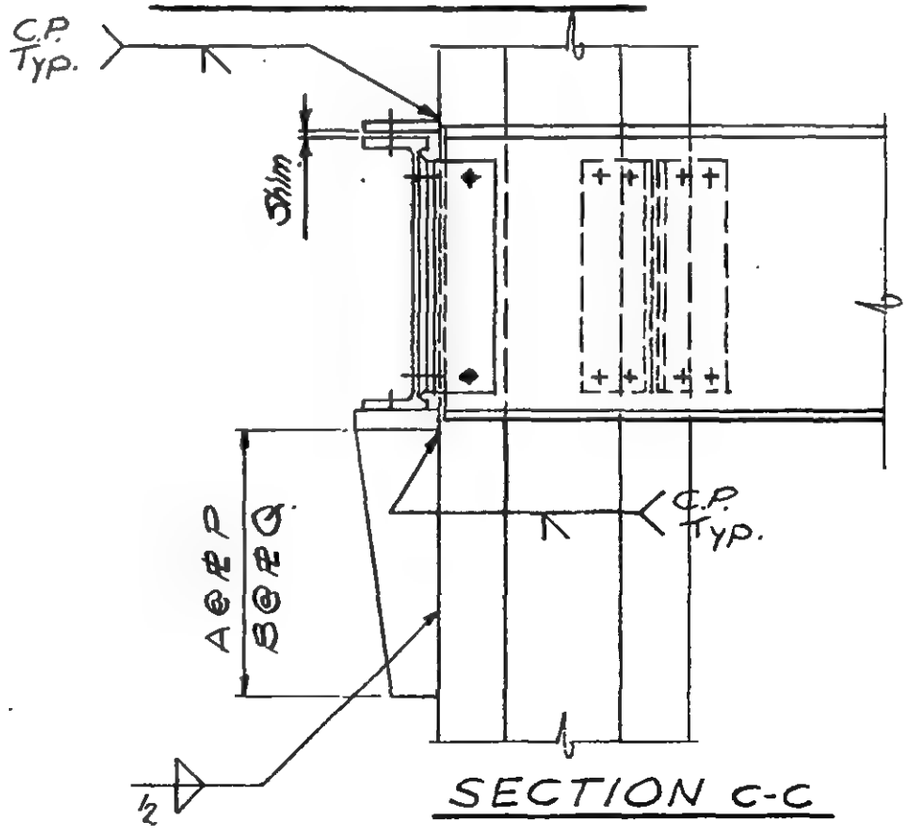

LICENSED PROFESSIONAL ENGINEER — LESLIE E. ROBERTSON — No. 34360 — UNIVERSITY OF THE STATE OF NEW YORK

DESIGNED

DRAWN

REVIEWED

G-AB1-44.7

SKILLING - HELLE - CHRISTIANSEN - ROBERTSON Structural & Civil Engineers

PROJECT THE WORLD TRADE CENTER | TITLE SCHEDULE FOR DETAIL 237 G, H, I, J | DATE 9-18-68

REVISIONS

	237G	237H	237I	237J		
PLATES						
P	1"	1"	1"	1"		
Q	1"	1"	1"	1"		
R	1"	1"	1"	1"		
S	1"	1"	1"	1"		
T	1"	1"	1"	1"		
U	3/4"	5/8"	7/8"	7/8"		
V	1 1/2"	1 1/4"	1 1/2"	1 1/2"		
DIMENSIONS						
A	1'-0"	1'-0"	1'-0"	1'-0"		
B	1'-0"	1'-0"	1'-0"	1'-0"		
C	1'-8"	1'-8"	1'-8"	1'-8"		
D	1'-8"	1'-8"	1'-8"	1'-8"		
ANGLES						
A	-	-	-	-		
B	-	-	-	-		
BOLTS						
K	6 - 3/4" ϕ	6 - 3/4" ϕ	6 - 1" ϕ	6 - 3/4" ϕ		
L	6 - 3/4" ϕ	6 - 3/4" ϕ	6 - 1" ϕ	6 - 3/4" ϕ		
M	6 - 3/4" ϕ	6 - 3/4" ϕ	6 - 1" ϕ	6 - 3/4" ϕ		
N	-	-	-	-		
WELDS						
①	1/2	3/8	1/2	1/2		
②	1/2	3/8	1/2	1/2		
③	1/2	3/8	1/2	1/2		

LICENSED PROFESSIONAL ENGINEER
LESLIE E. ROBERTSON
No. 34360
UNIVERSITY OF THE STATE OF NEW YORK

6-ABI-44.8

SKILLING - HELLE - CHRISTIANSEN - ROBERTSON Structural & Civil Engineers

PROJECT THE WORLD TRADE CENTER | TITLE CONNECTION DETAIL 238 A.B.C.D | DATE 6-5-67

REVISIONS
7-5-67
7-28-67
10-2-67

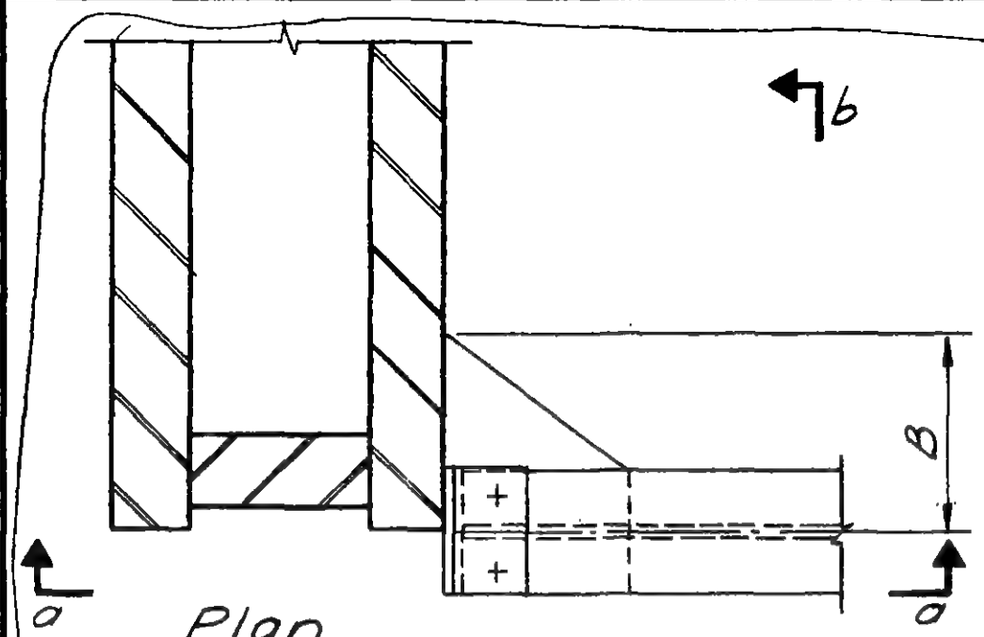

Plan

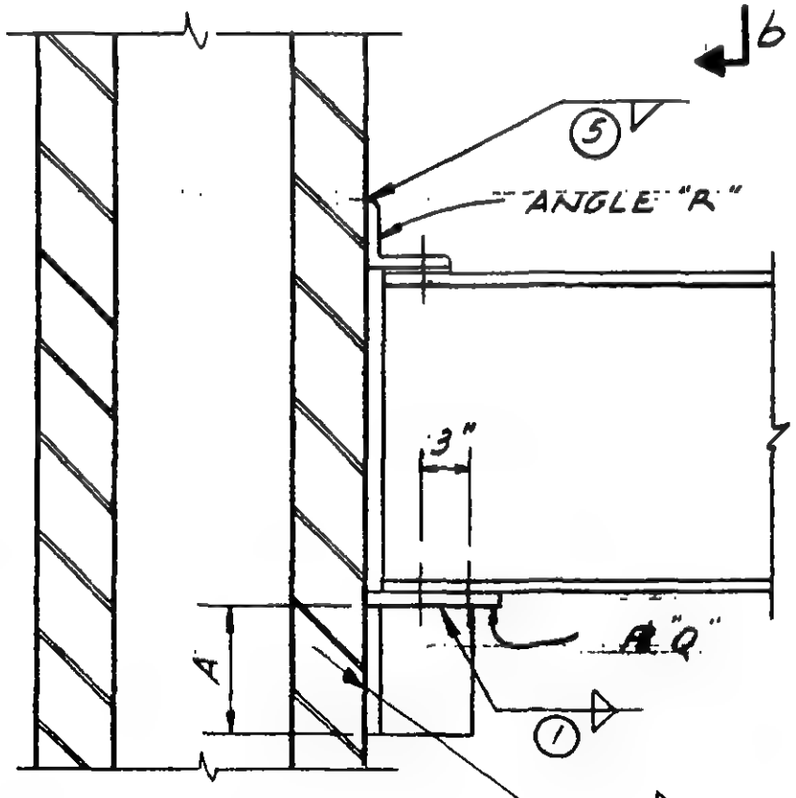

Section a-a

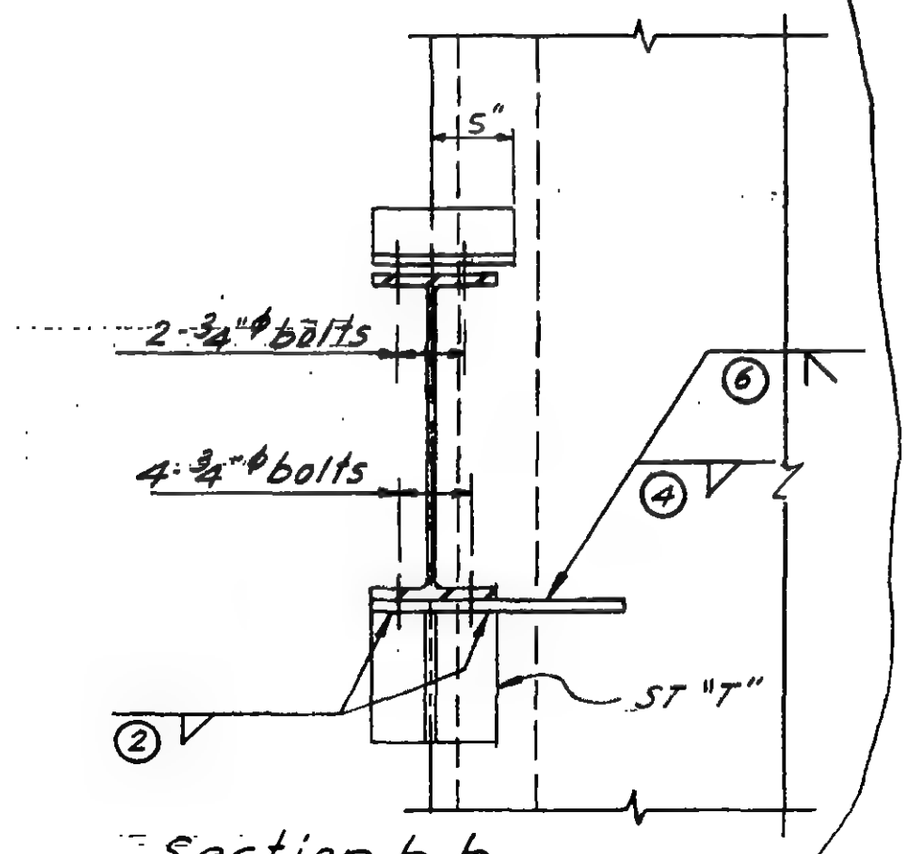

Section b-b

LICENSED PROFESSIONAL ENGINEER
LESLIE E. ROBERTSON
No. 34360
UNIVERSITY OF THE STATE OF NEW YORK

6-AB1-45

SKILLING - HELLE - CHRISTIANSEN - ROBERTSON — Structural & Civil Engineers

PROJECT: THE WORLD TRADE CENTER | TITLE: SCHEDULE FOR DETAIL 238 A, B, C, D | DATE: 7-5-67

REVISIONS
7-28-67
10-2-67

	238 A & B	238 C	238 D
PLATES			
Q	3/8"	1"	3/4"
ANGLES			
R	5 x 3 x 5/16	5 x 3 x 5/16	4 x 4 x 3/8
ST T	ST 5 WF 27	ST 6 WF 60	ST 6 WF 60
DIMENSIONS			
A	0'-10"	1'-4"	1'-0"
B	0'-6½"	—	0'-6½
WELDS			
①	5/16	1/2	5/16
②	5/16	5/16	5/16
③	1/2	1/2	5/8
④	1/2	—	5/16
⑤	5/16	5/16	5/16
⑥	—	C.P.	—

LICENSED PROFESSIONAL ENGINEER
LESLIE E. ROBERTSON
No. 34360
UNIVERSITY OF THE STATE OF NEW YORK

6-AB1-45.1

SKILLING - HELLE - CHRISTIANSEN - ROBERTSON Structural & Civil Engineers

PROJECT THE WORLD TRADE CENTER | TITLE CONNECTION DETAIL 240 A | DATE 6-5-67

REVISIONS

10-2-67

All bolts - ¾"ϕ

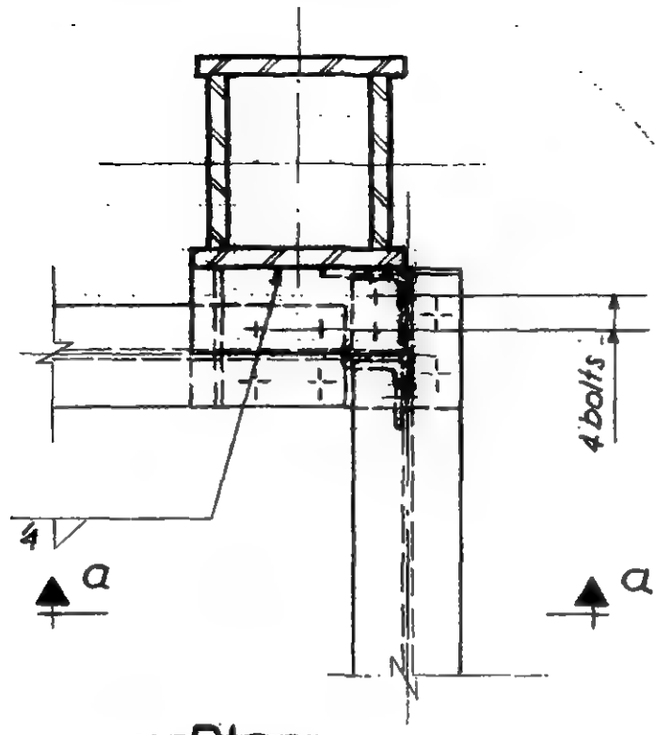

Plan

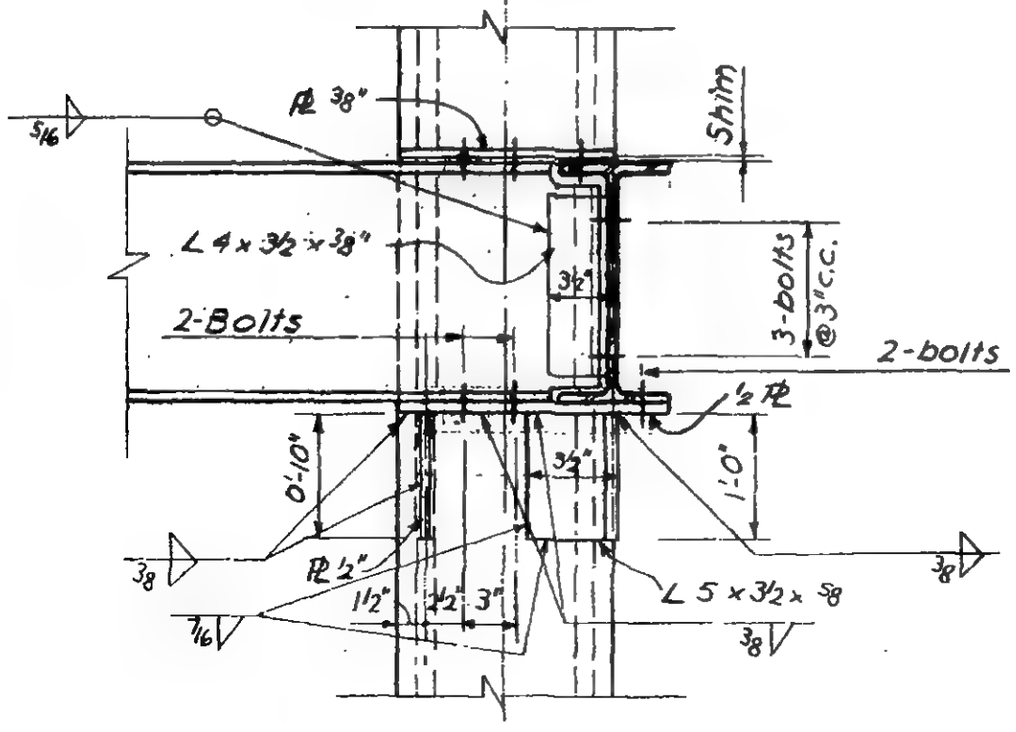

Section a-a

LICENSED PROFESSIONAL ENGINEER
LESLIE E. ROBERTSON
No. 34360
UNIVERSITY OF THE STATE OF NEW YORK

6-AB1-46

WORTHINGTON, SKILLING, HELLE & JACKSON — Civil & Structural Engineers

PROJECT: THE WORLD TRADE CENTER | TITLE: CONNECTION DETAIL 24 TA | DATE: 6-30-67

REVISIONS

1 10-5-67

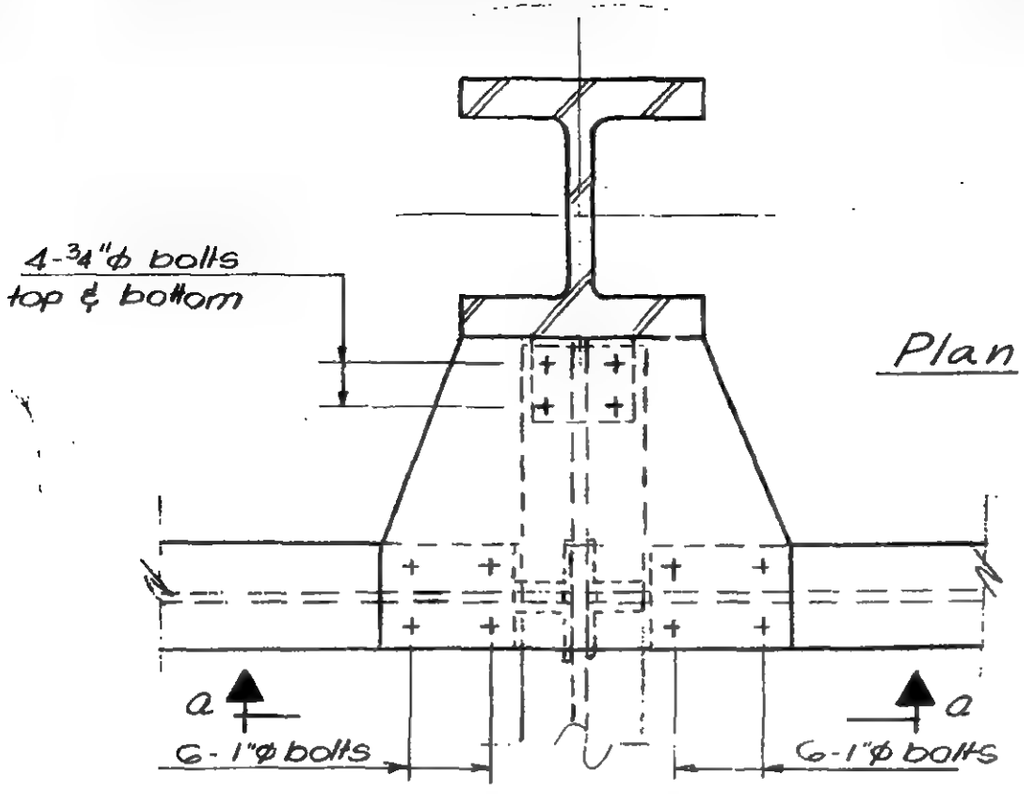

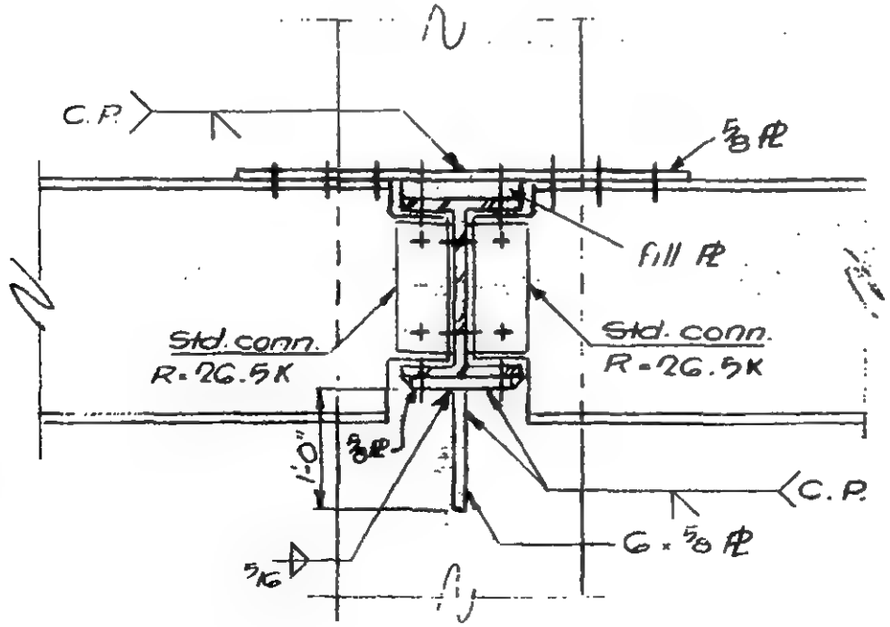

SECTION a-a

LICENSED PROFESSIONAL ENGINEER
LESLIE E. ROBERTSON
No. 34360
UNIVERSITY OF THE STATE OF NEW YORK

6-AB1-47

WORTHINGTON, SKILLING, HELLE & JACKSON — Civil & Structural Engineers

PROJECT	TITLE	DATE
THE WORLD TRADE CENTER	CONNECTION DETAIL 242 (A, B)	6-30-67

REVISIONS

10-5-67

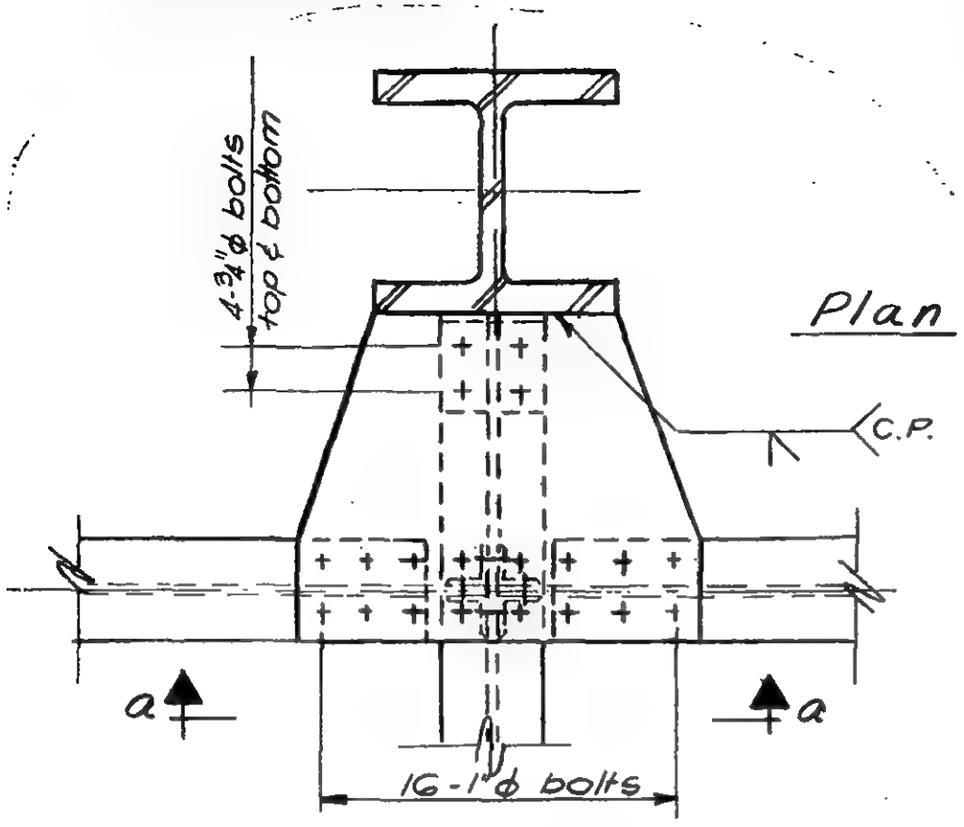

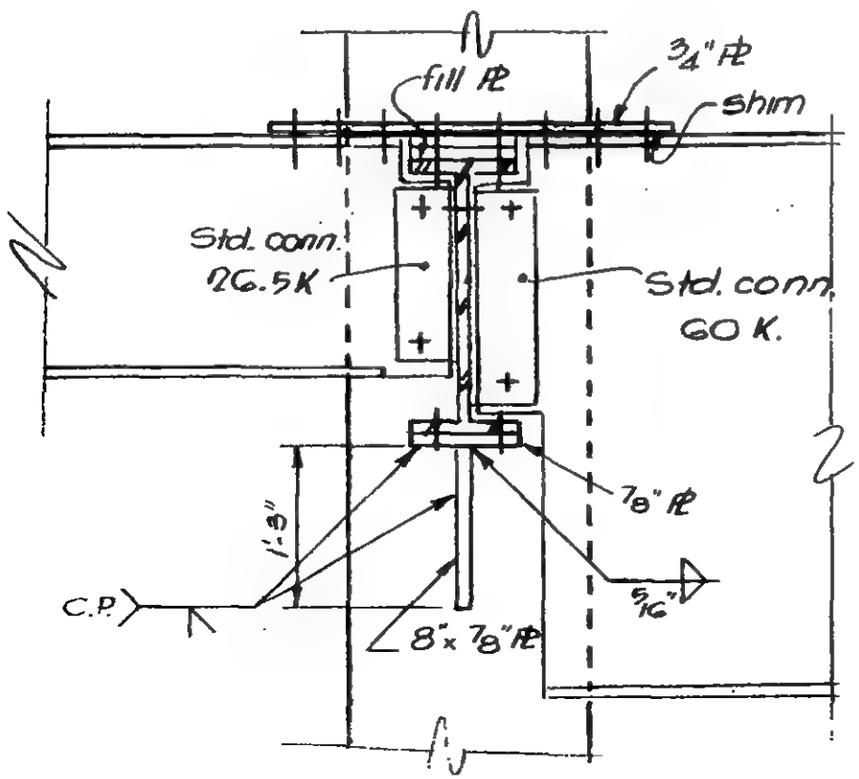

SECTION a-a

LICENSED PROFESSIONAL ENGINEER
LESLIE E. ROBERTSON
No. 34360
STATE OF NEW YORK

6-AB1-48

WORTHINGTON, SKILLING, HELLE & JACKSON — Civil & Structural Engineers

PROJECT THE WORLD TRADE CENTER | TITLE CONNECTION DETAIL 243 A, B, C | DATE 6-30-[illegible]

REVISIONS
10-5-67
11-23-67
5-6-68

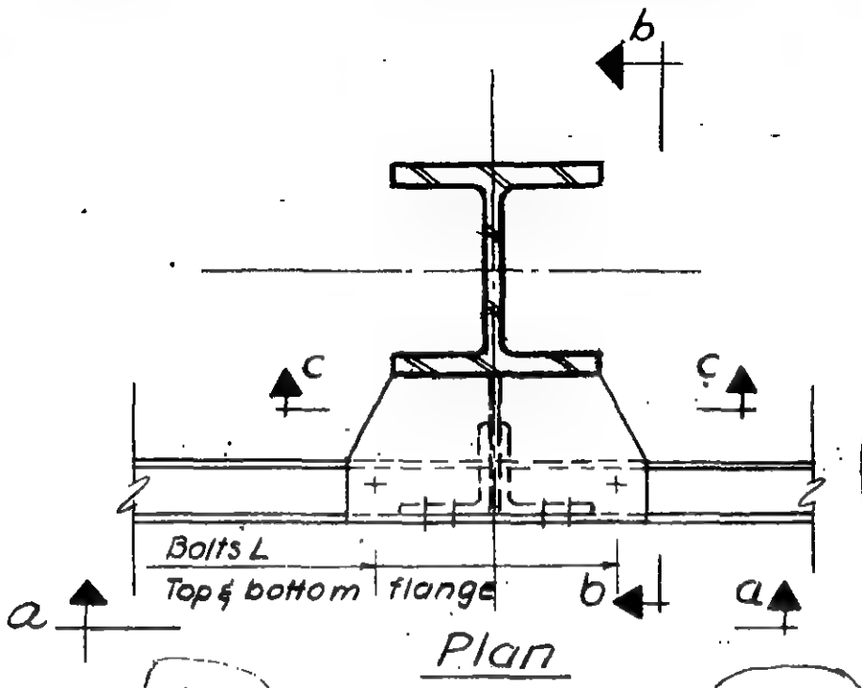

Plan

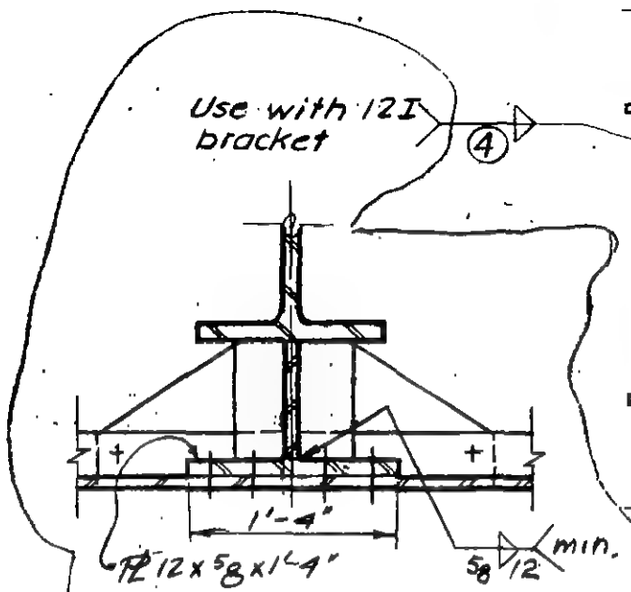

Alternate Conn. for 243 A, B, & C

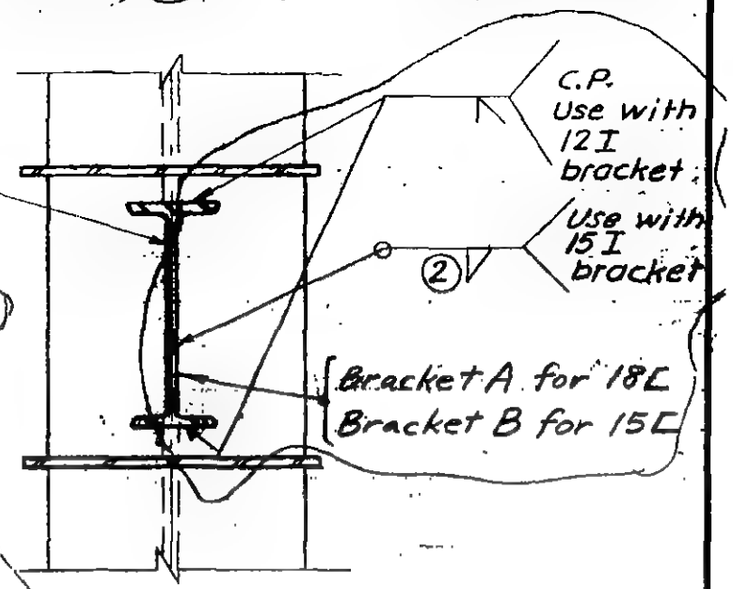

Section c-c

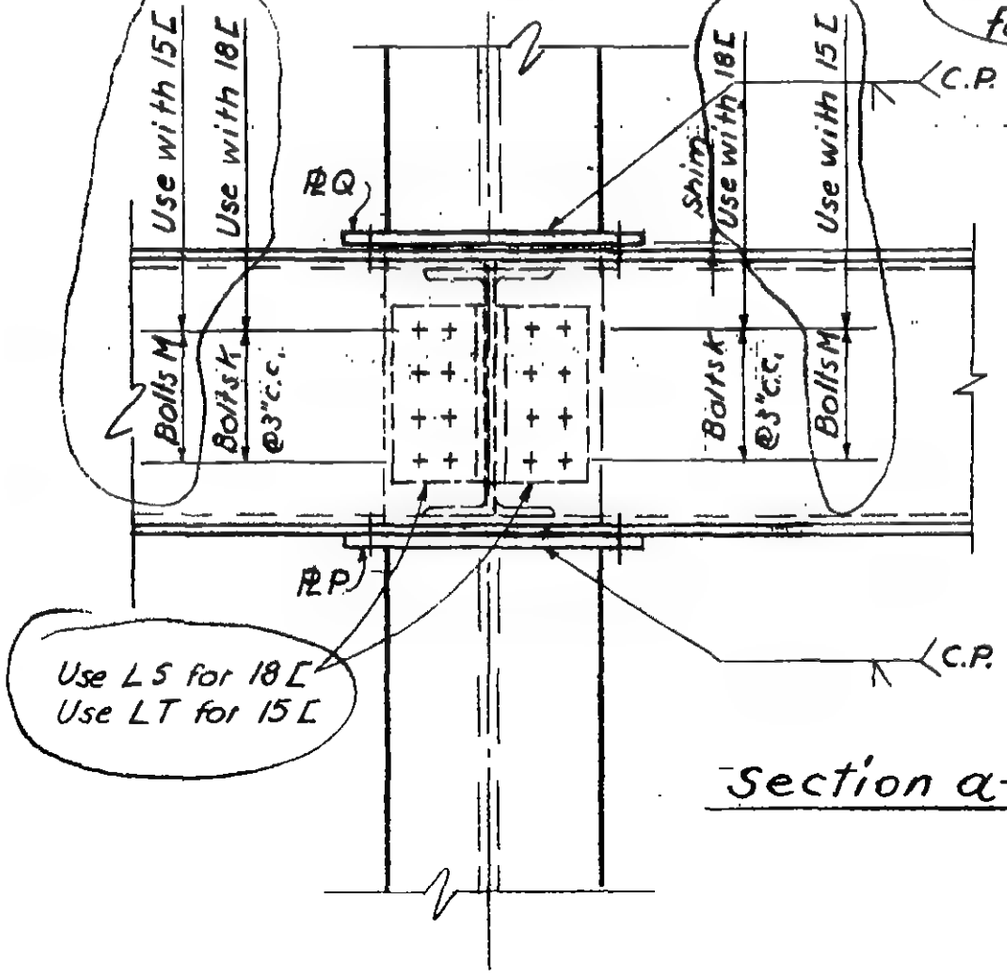

Section a-a

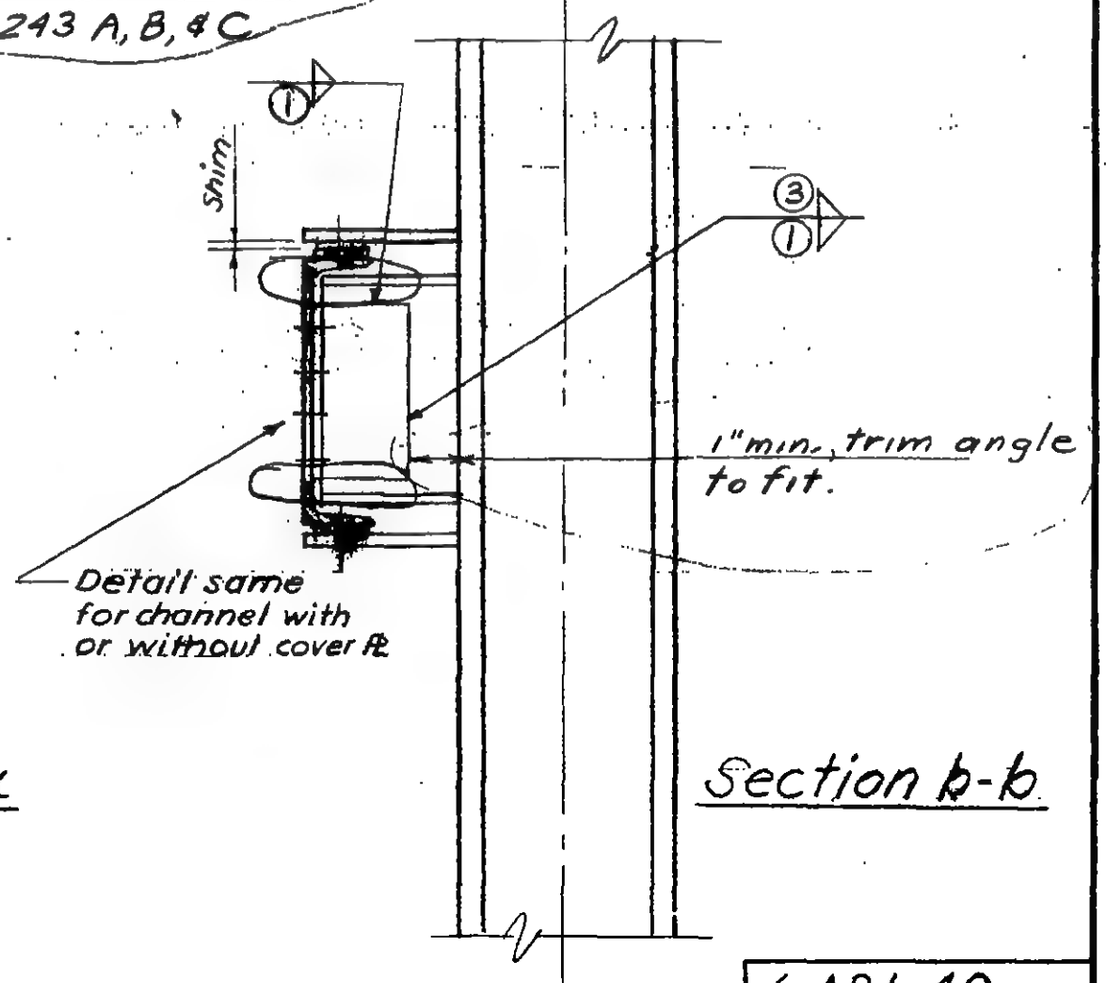

Section b-b

6-AB1-49

LICENSED PROFESSIONAL ENGINEER
LESLIE E. ROBERTSON
No. 34360
UNIVERSITY OF THE STATE OF NEW YORK

4

SKILLING - HELLE - CHRISTIANSEN - ROBERTSON Structural & Civil Engineers

PROJECT: THE WORLD TRADE CENTER | TITLE: SCHEDULE FOR DETAIL 243 A, B, C | DATE: 10-5-67

REVISIONS
11-23-67
5-6-68

	243 A	243 B	243 C
PLATES			
P	3/4"	5/8"	3/4"
Q	3/4"	5/8"	3/4"
BRACKET A	PC 15 I 50	PC 15 I 50	PC 15 I 50
B	PC 12 I 50	PC 12 I 50	PC 12 I 50, Fy-50
ANGLES			
S	6 x 6 x 5/8 x 1'-0"	6 x 4 x 3/8 x 1'-0"	8 x 6 x 3/4 x 1'-0"
T	8 x 8 x 5/8 x 0'-9"	8 x 4 x 1/2 x 0'-9"	8 x 6 x 3/4 x 0'-9"
BOLTS			
K	8 - 7/8" ϕ	8 - 3/4" ϕ	8 - 1" ϕ
L	8 - 1" ϕ	6 - 1" ϕ	8 - 1" ϕ
M	6 - 1" ϕ	6 - 7/8" ϕ	6-1" ϕ A490
WELDS			
(1)	9/16	5/16	9/16
(2)	9/16	3/8	9/16
(3)	—	—	1/4
(4)	5/8	1/2	5/8

LICENSED PROFESSIONAL ENGINEER
LESLIE E. ROBERTSON
No. 24360
UNIVERSITY OF THE STATE OF NEW YORK

6-AB1-49.1

WORTHINGTON, SKILLING, HELLE & JACKSON — Civil & Structural Engineers

PROJECT THE WORLD TRADE CENTER | TITLE CONNECTION DETAIL 244A, B | DATE 6-5-67

REVISIONS

10-2-67
9-25-68

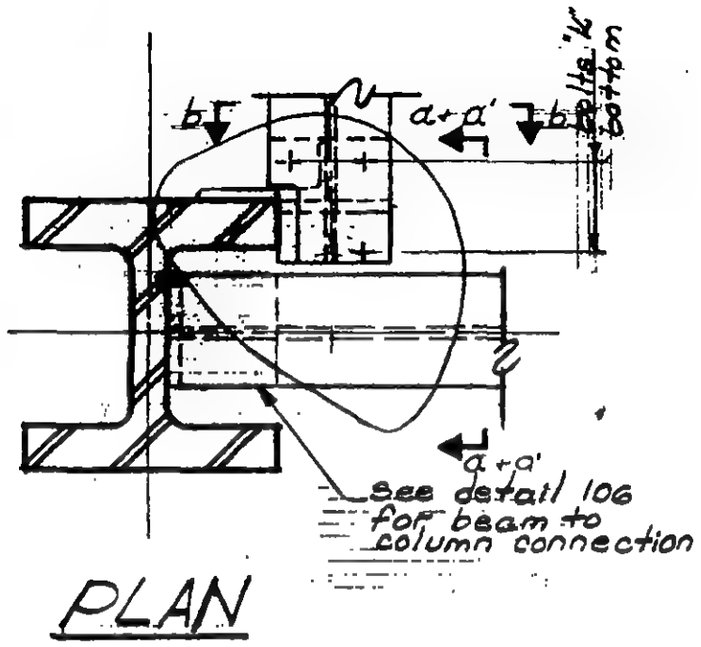

PLAN

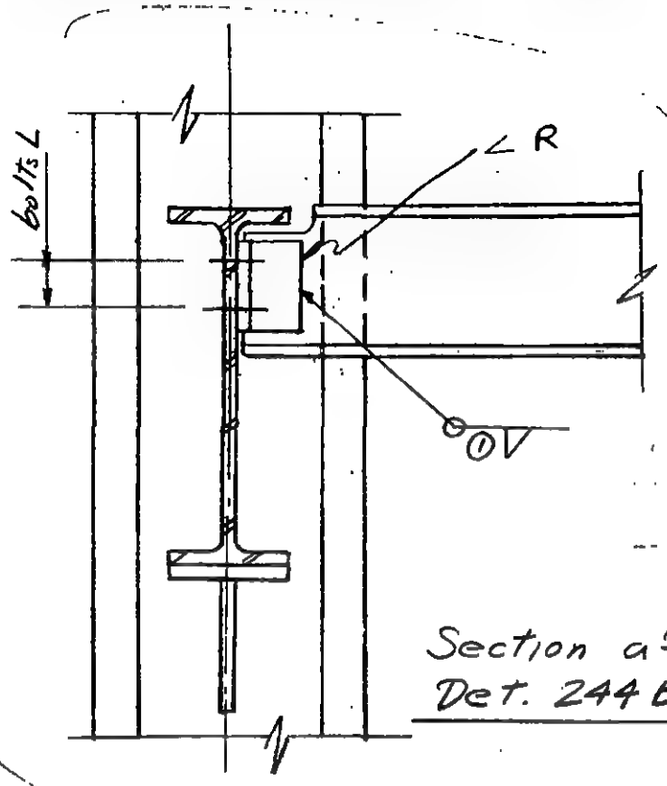

Section a-a
Det. 244 B only

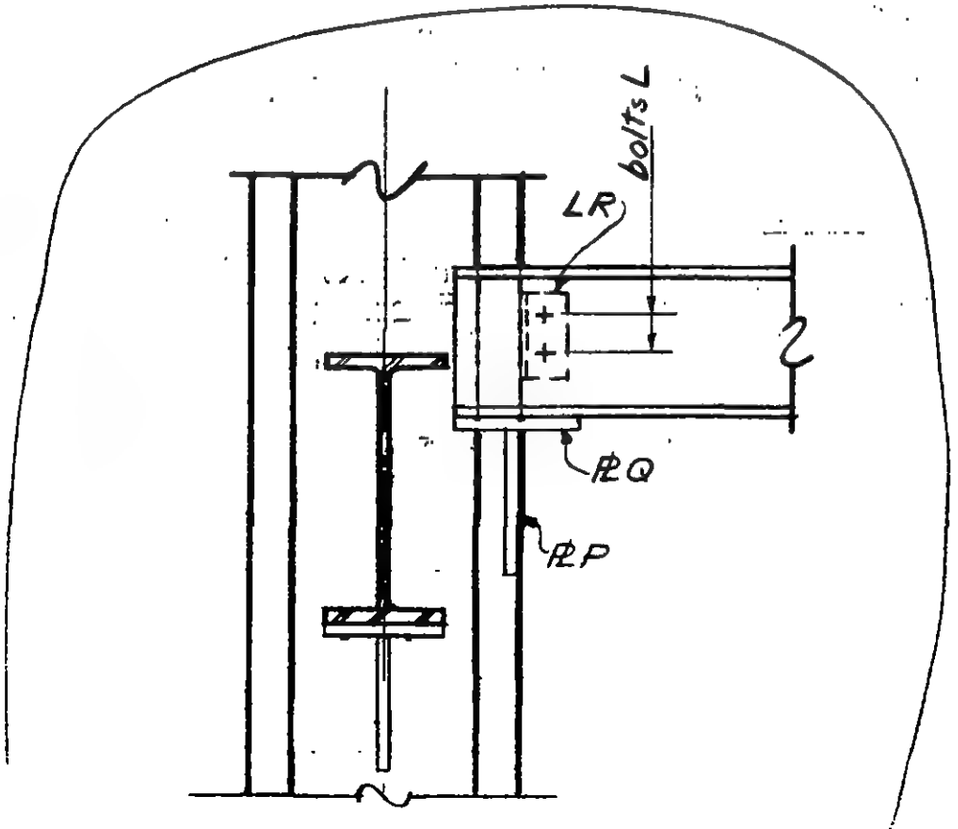

Section a-a det. 244A

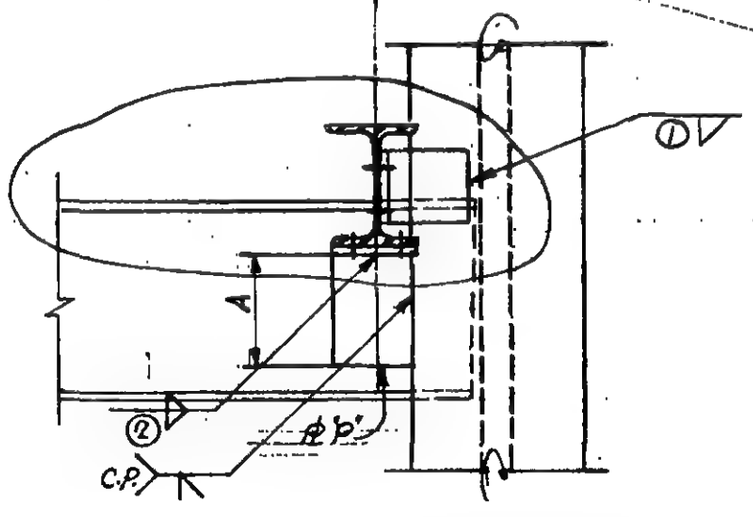

Section b-b det. 244A

LESLIE E. ROBERTSON — No. 24360 — LICENSED PROFESSIONAL ENGINEER — STATE OF NEW YORK

6-ABI-50

SKILLING - HELLE - CHRISTIANSEN - ROBERTSON Structural & Civil Engineers

PROJECT THE WORLD TRADE CENTER | TITLE SCHEDULE FOR DETAIL 244 A,B | DATE 10-2-67

REVISIONS

	244 A	244B
PLATE		
P	½"	—
Q	½"	—
ANGLE		
R	4×3½×5/16	4×3½×⅜
DIMENSION		
A	0'-11"	—
BOLTS		
K	3-¾" ø	—
L	2-¾" ø	4-⅞" ø
WELDS		
①	¼	5/16
②	5/16	—

LICENSED PROFESSIONAL ENGINEER
LESLIE E. ROBERTSON
No. 34360
UNIVERSITY OF THE STATE OF NEW YORK

6-AB1-50.1

WORTHINGTON, SKILLING, HELLE & JACKSON — Civil & Structural Engineers

PROJECT: THE WORLD TRADE CENTER | TITLE: CONNECTION DETAIL 245 A,B,C,D | DATE: 5-9-67

REVISIONS
7-28-67
8-5-67
9-15-67
11-10-67

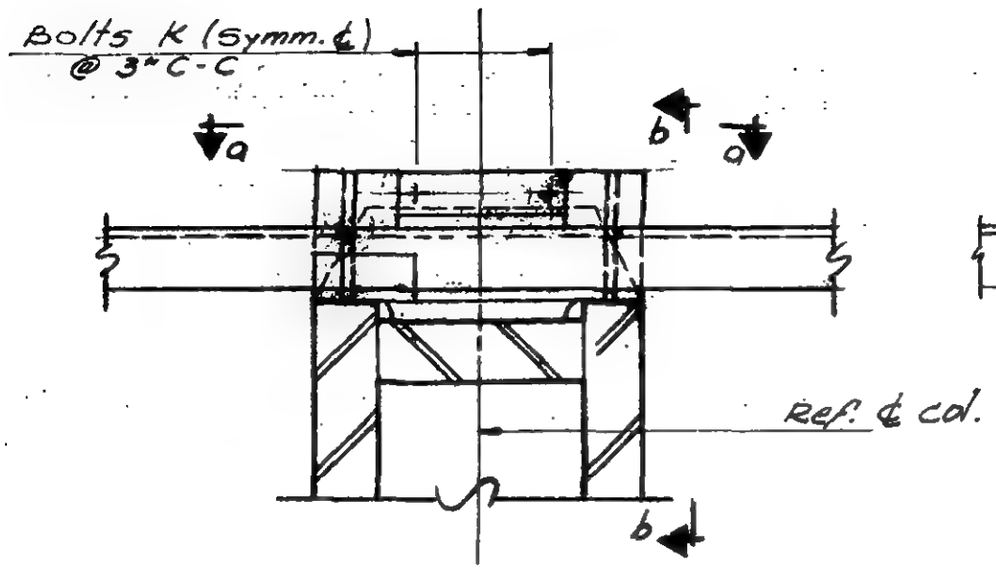

PLAN

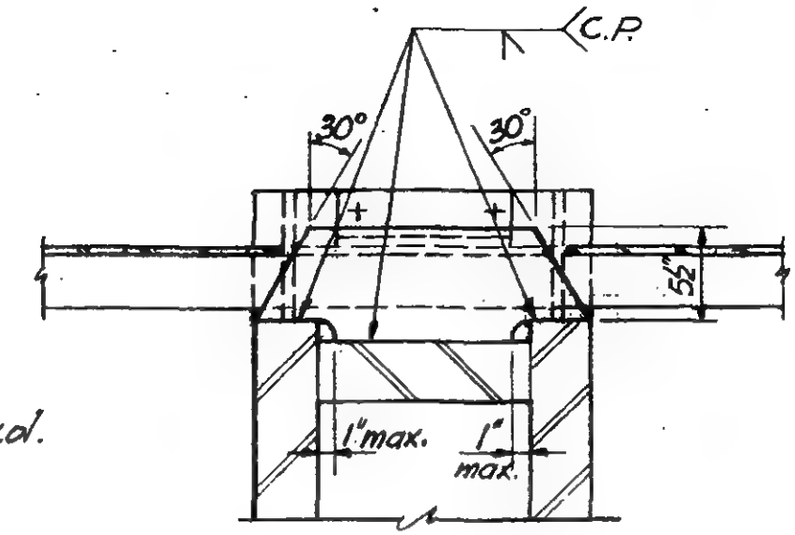

Section C-C
Detail 245 A only

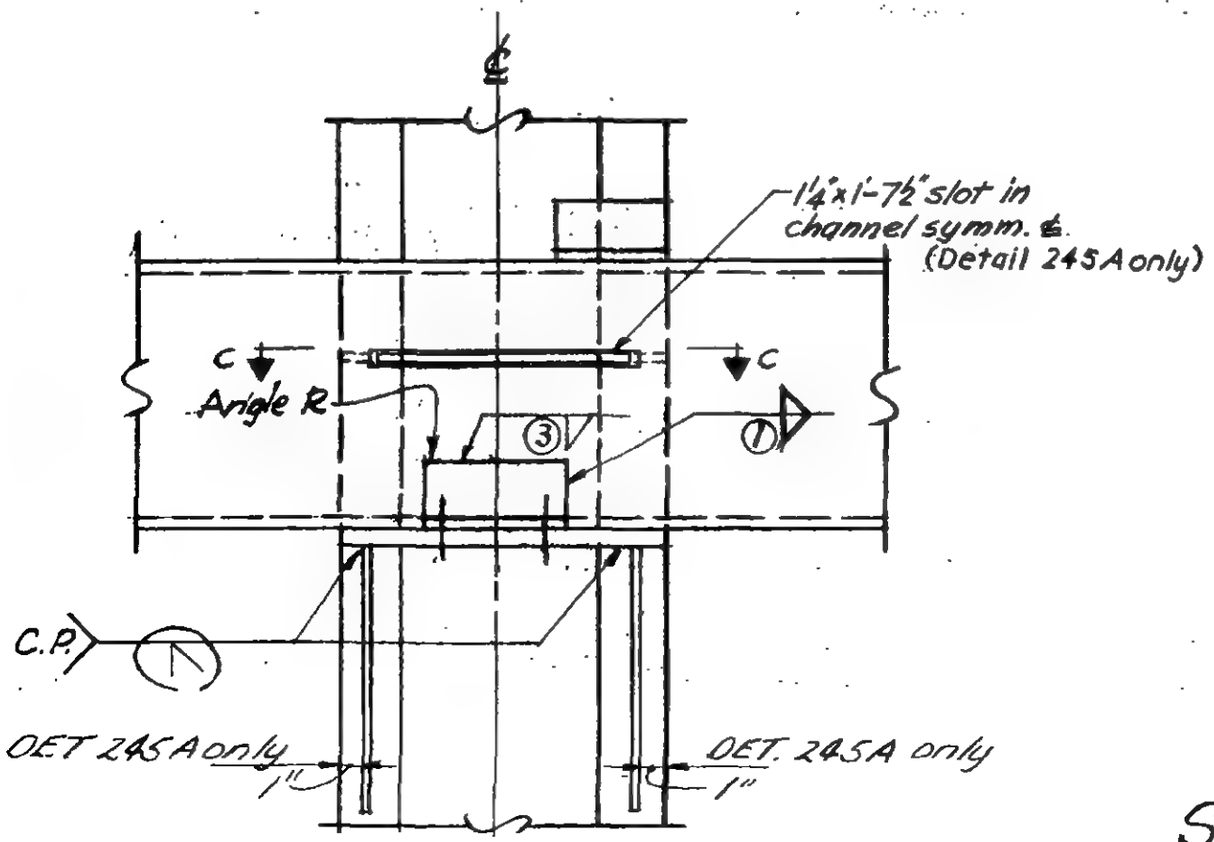

Section a-a

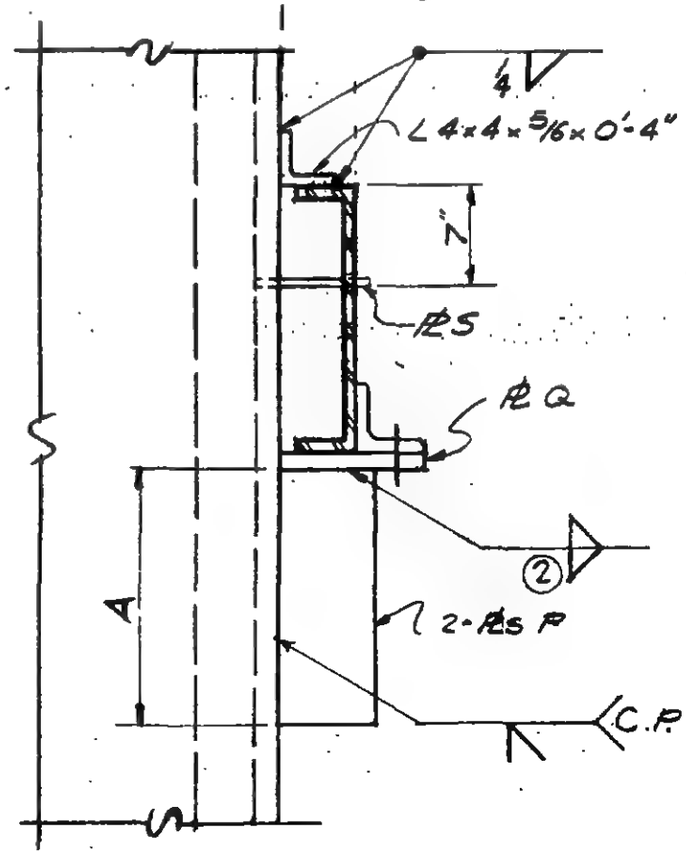

Section b-b

6-AB1-51

LESLIE E. ROBERTSON — LICENSED PROFESSIONAL ENGINEER — No. 34960 — STATE OF NEW YORK

SKILLING - HELLE - CHRISTIANSEN - ROBERTSON Structural & Civil Engineers

PROJECT THE WORLD TRADE CENTER | TITLE SCHEDULE FOR DETAIL 245 A, B, C, D, E, F | DATE 7-28-67

REVISIONS

8-5-67
9-15-67
10-5-67

	245 A	245 B	245 C	245 D	245 E	245 F
PLATES						
P	7" x 1/2"	7" x 3/4"	7" x 3/4"	7" x 5/8"	6' x 5/8"	6' x 3/4"
Q	1"	3/4"	1"	1"	3/4"	3/4"
S	7/8"	—	—	—	—	—
ANGLES						
R	3 1/2 x 3 1/2 x 3/8	3 x 3 x 5/16	3 1/2 x 3 1/2 x 3/8	3 1/2 x 3 1/2 x 3/8	—	—
DIMENSIONS						
A	1'-4"	1'-5"	1'-3"	1'-1"	1'-1"	1'-5"
BOLTS						
K	5 - 1" ϕ	3 - 3/4" ϕ	5 - 1" ϕ	4 - 3/4" ϕ	2 - 3/4" ϕ	2 - 3/4" ϕ
WELDS						
①	5/16	1/4	1/4	1/4	—	—
②	5/16	5/16	5/16	5/16	—	—
③	—	—	1/4	1/4	—	—

6 - ABI - 511

SKILLING - HELLE - CHRISTIANSEN - ROBERTSON — Structural & Civil Engineers

PROJECT THE WORLD TRADE CENTER | TITLE CONNECTION DETAIL 24? E, F, G | DATE 10-?-67

REVISIONS

11-23-67

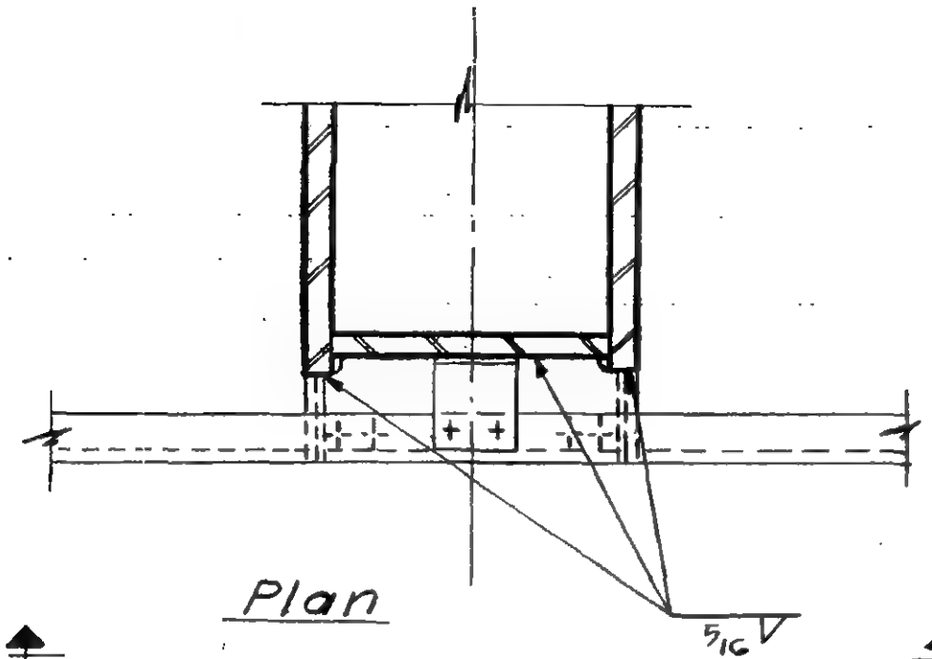

LICENSED PROFESSIONAL ENGINEER
LESLIE E. ROBERTSON
No. 34360
UNIVERSITY OF THE STATE OF NEW YORK

G-AB1-51.2

SKILLING - HELLE - CHRISTIANSEN - ROBERTSON Structural & Civil Engineers

PROJECT THE WORLD TRADE CENTER | TITLE SCHEDULE FOR DETAIL 245 G | DATE 11-23-67

REVISIONS

	245 G					
PLATES						
P	5/8					
Q	5/8					
DIMENSIONS						
A	1'-2"					
BOLTS						
K	2-3/4" ϕ					

LICENSED PROFESSIONAL ENGINEER LESLIE E. ROBERTSON No. 34360 UNIVERSITY OF THE STATE OF NEW YORK

6-AB1-51.3

SKILLING - HELLE - CHRISTIANSEN - ROBERTSON Structural & Civil Engineers

PROJECT THE WORLD TRADE CENTER | TITLE CONNECTION DETAIL 2A6 A,B,C,D | DATE 3-22-67

REVISIONS

7-28-67
8-14-67
9-15-67
10-3-67
10-31-67
11-23-67

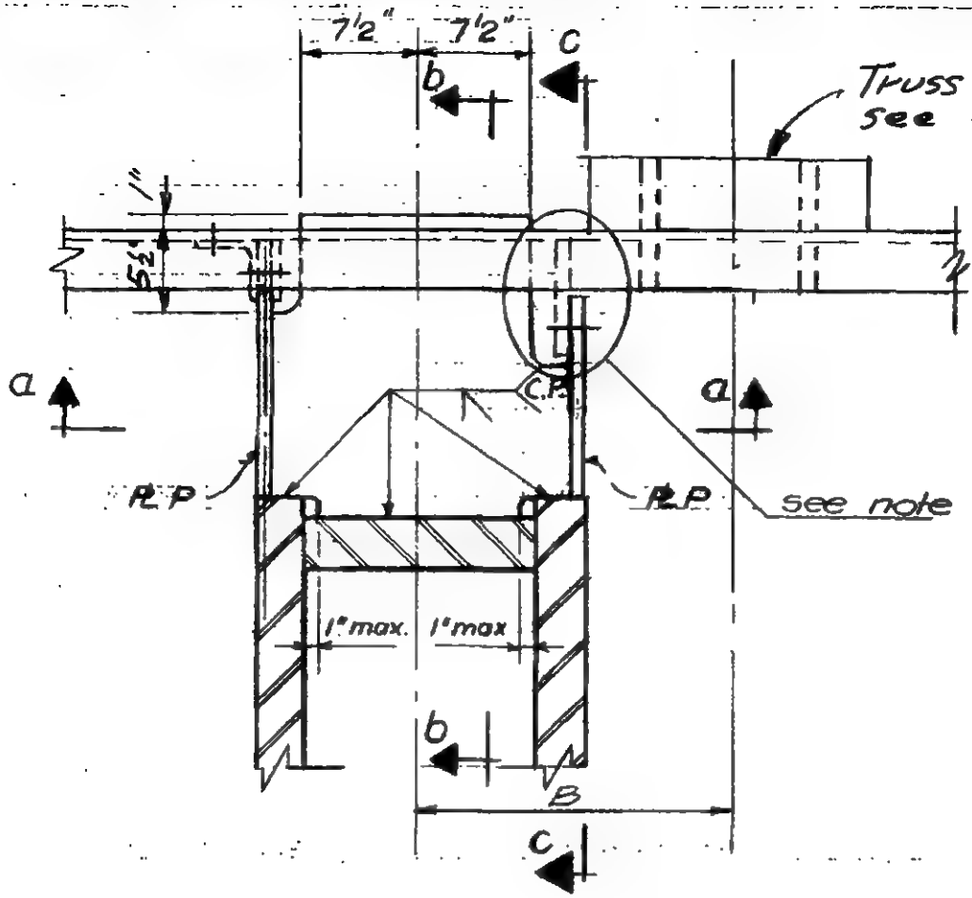

Plan

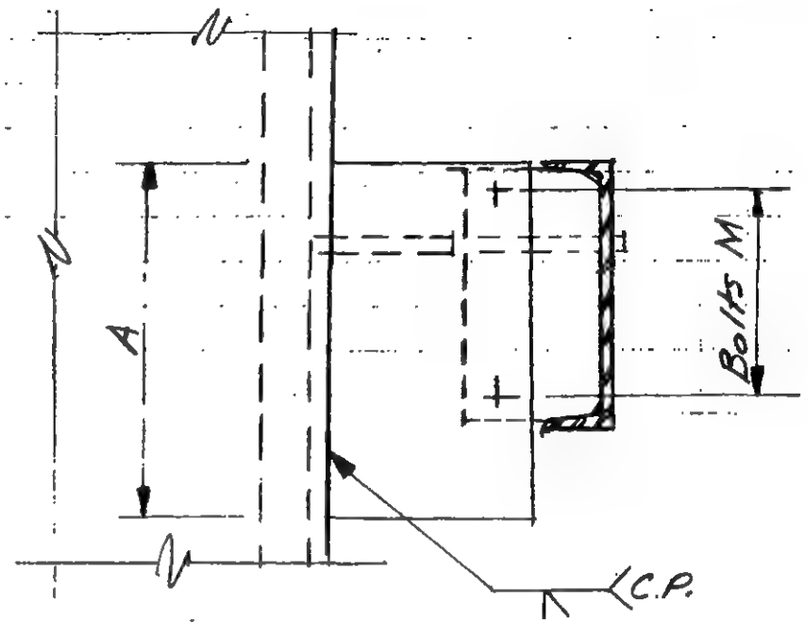

Section c-c

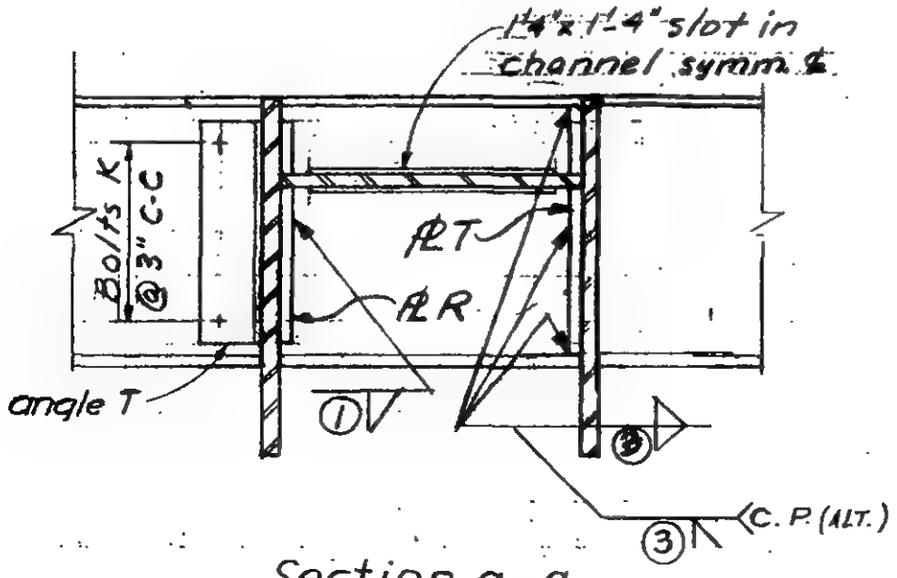

Section a-a

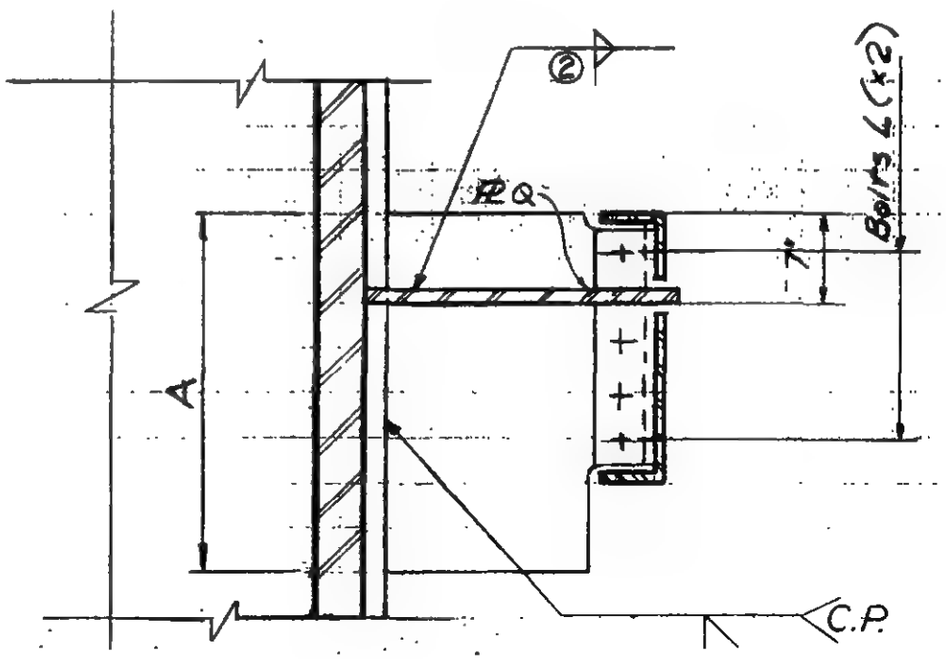

Section b-b

Note: Use plan & section c-c as shown for detailing only if dimension B=1'-5" or less, otherwise detail is symetrical to other side of plan.

6-AB1-52

LICENSED PROFESSIONAL ENGINEER
LESLIE E. ROBERTSON
No. 34360
UNIVERSITY OF THE STATE OF NEW YORK

SKILLING - HELLE - CHRISTIANSEN - ROBERTSON Structural & Civil Engineers

PROJECT: THE WORLD TRADE CENTER | TITLE: SCHEDULE FOR DETAIL 246 A,B,C,D | DATE: 7-28-67

REVISIONS
8-14-67
9-15-67
10-3-67
10-31-67
11-10-67
11-23-67

	246A	246B	246C	246D
PLATE				
P	1⅛"	⅞"	⅞"	1⅛"
Q	⅞"	¾"	1"	1"
R	½"	⅜"	⅜"	⅝"
T	1"	1"	1"	1"
DIMENSIONS				
A	1'-6"	1'-8"	2'-0"	2'-0"
ANGLES				
T	4"x 3½" x 5/16	4"x 3½" x 5/16	4x 3½" x 5/16	4 x 3½ x ⅜
BOLTS				
K	4-¾"ϕ	4-¾"ϕ	4-¾"ϕ	4-⅞"ϕ
L	4-¾"ϕ	4-¾"ϕ	4-¾"ϕ	4-⅞"ϕ
M	5-1⅛"ϕ(A490)	5-1⅛"ϕ(A490)	5-1⅛"ϕ(A490)	5-1⅛"ϕ A490
WELDS				
①	7/16	7/16	7/16	12
②	⅜	⅜	⅜	5/16
③	5/16 or C.P.	5/16 or C.P.	5/16 or C.P.	C.P.

LICENSED PROFESSIONAL ENGINEER
LESLIE E. ROBERTSON
No. 34360
UNIVERSITY OF THE STATE OF NEW YORK

6-ABI-52.1

SKILLING - HELLE - CHRISTIANSEN - ROBERTSON Structural & Civil Engineers

PROJECT THE WORLD TRADE CENTER | TITLE CONNECTION DETAIL 246 E | DATE 11-29-67

REVISIONS

12-21-67
1-24-68

Note: Use plan as shown for detailing only if dimension B = 1'-5" or less, otherwise detail is symetrical to other side of plan.

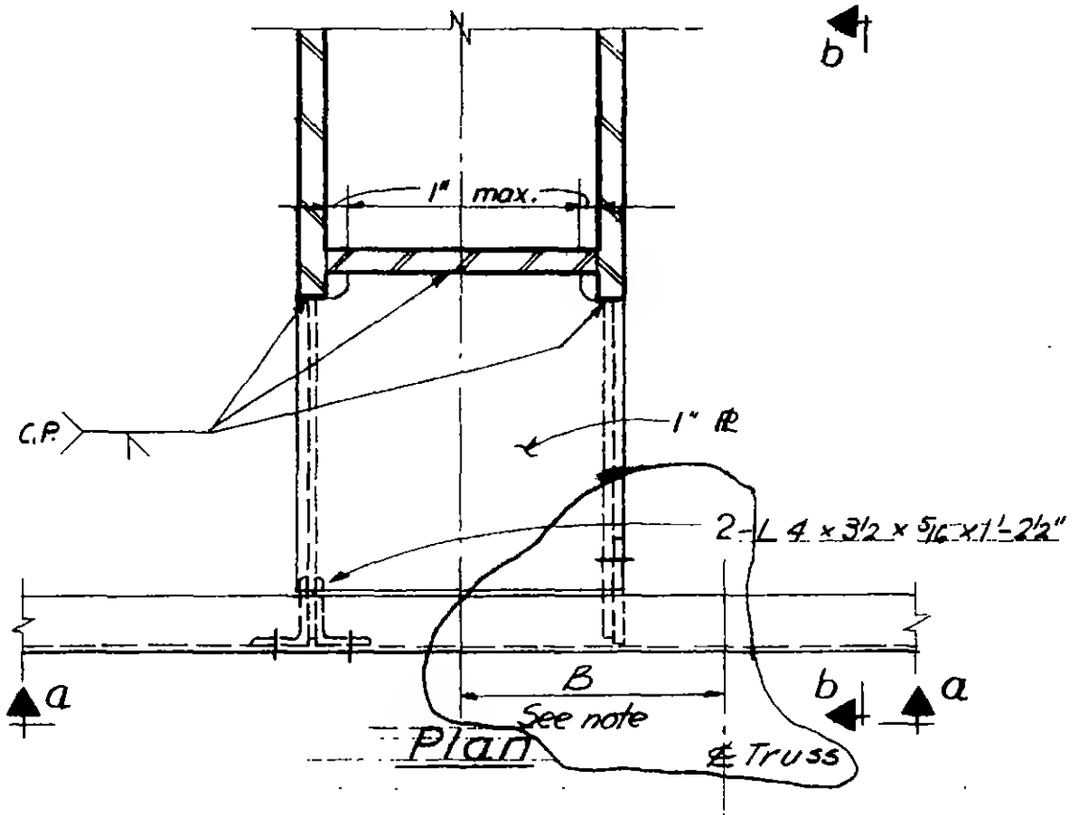

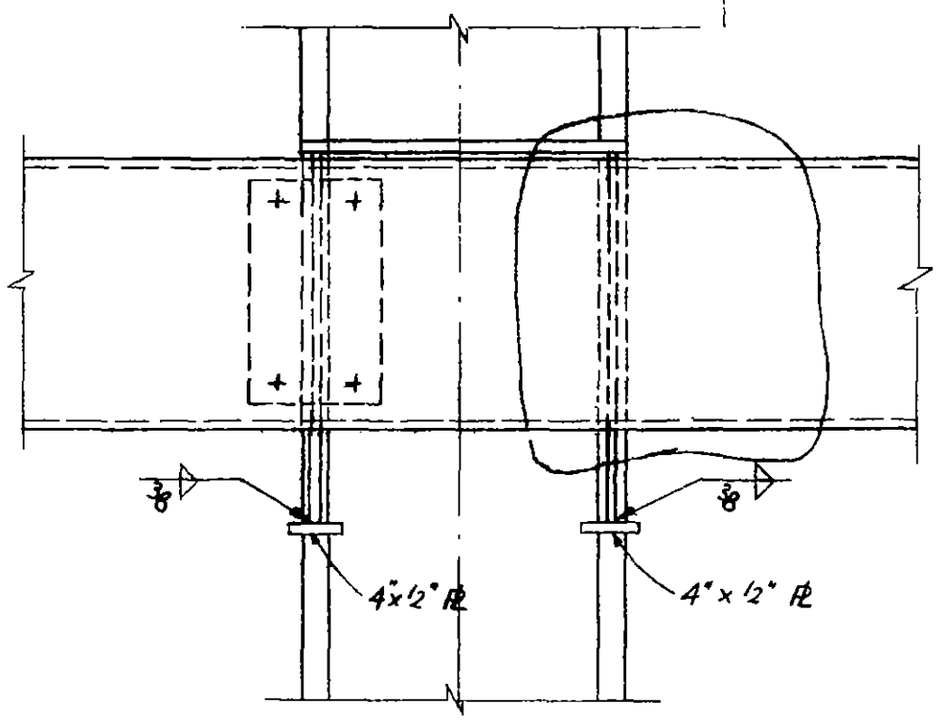

Section a-a

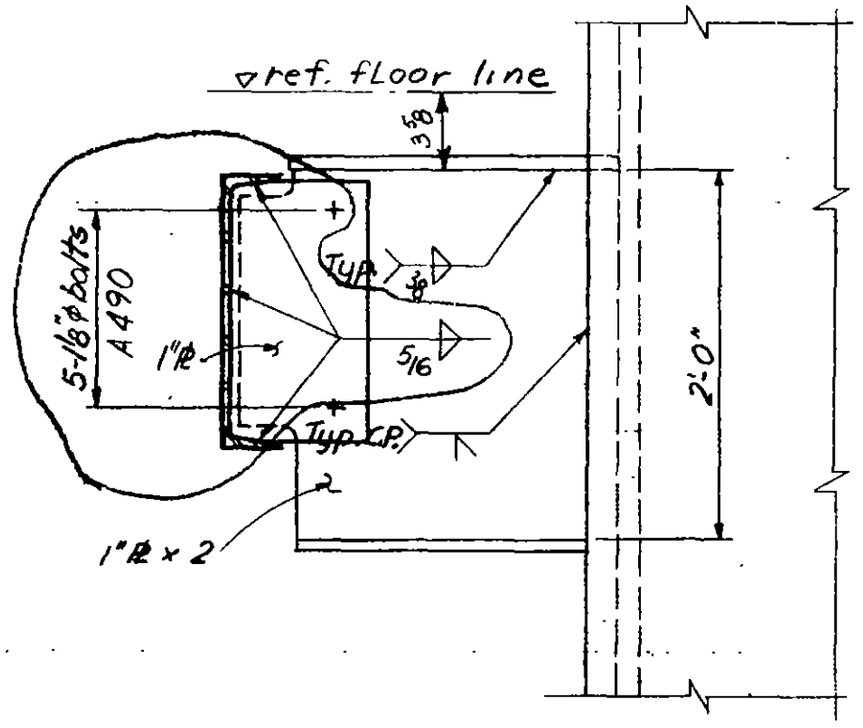

Section b-b

LICENSED PROFESSIONAL ENGINEER
LESLIE E. ROBERTSON
No. 34360
UNIVERSITY OF THE STATE OF NEW YORK

6-AB1-52.2

SKILLING - HELLE - CHRISTIANSEN - ROBERTSON Structural & Civil Engineers

PROJECT THE WORLD TRADE CENTER | TITLE CONNECTION DETAIL 247 A-G | DATE 5-9-67

REVISIONS

-28-67
8-5-67
9-15-67
11-14-67
12-7-67
12-21-67

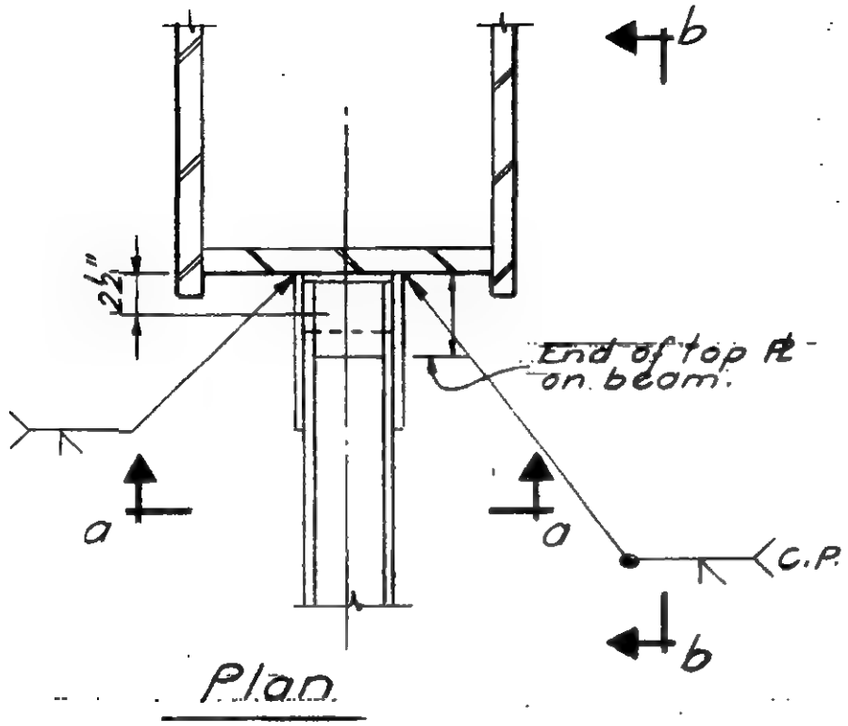

Plan

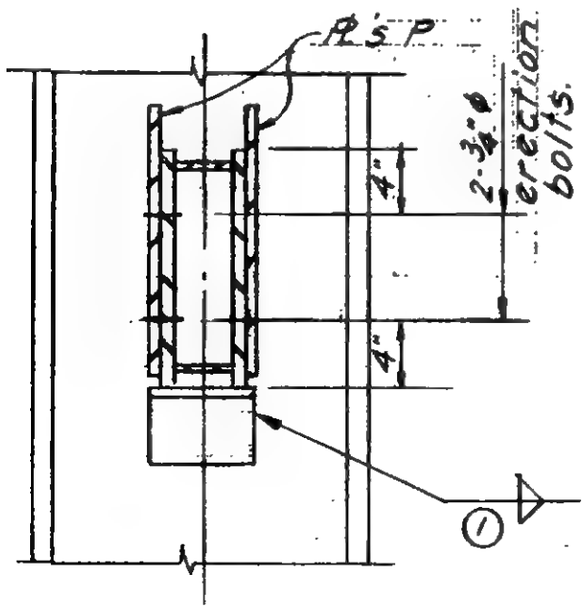

Section a-a

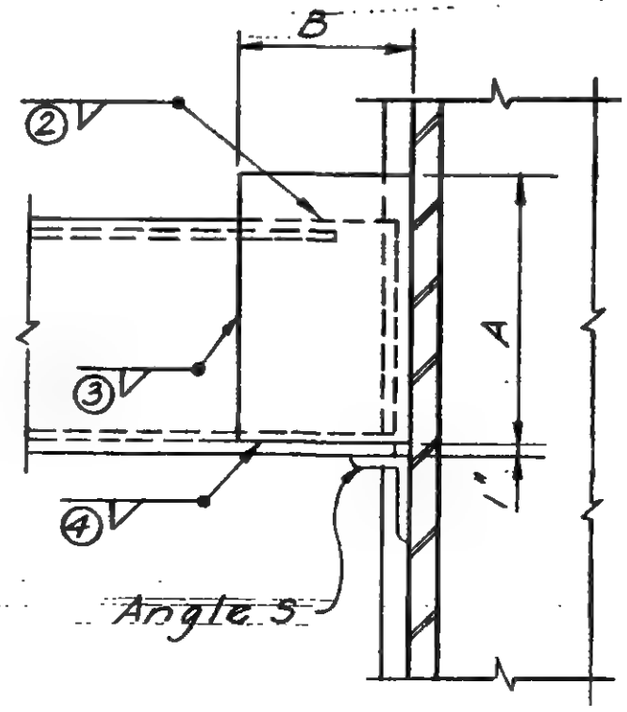

Section b-b

LICENSED PROFESSIONAL ENGINEER
LESLIE E. ROBERTSON
No. 34360
UNIVERSITY OF THE STATE OF NEW YORK

6-AB1-53

SKILLING - HELLE - CHRISTIANSEN - ROBERTSON Structural & Civil Engineers

PROJECT THE WORLD TRADE CENTER | TITLE CONNECTION DETAIL 247 A,C,E,G | DATE 12-21-67

REVISIONS

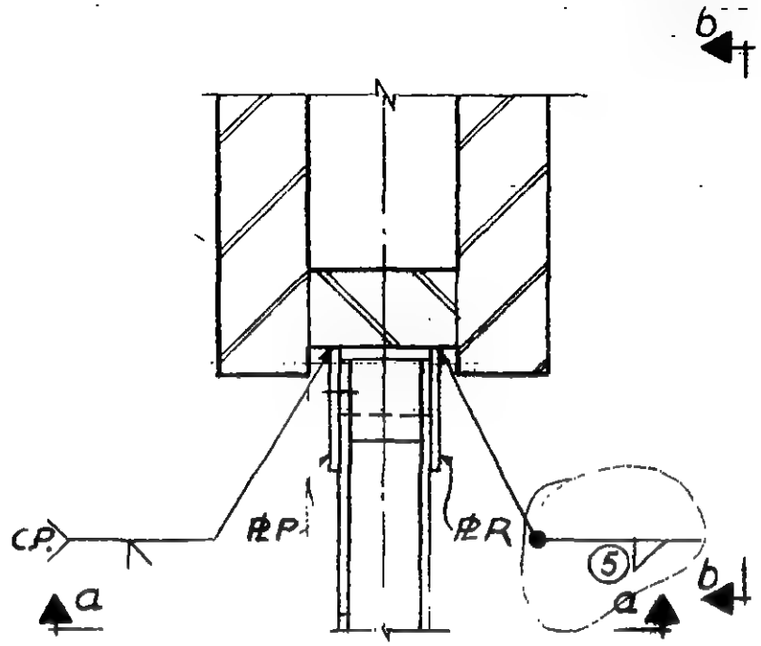

Plan A,C,E,G

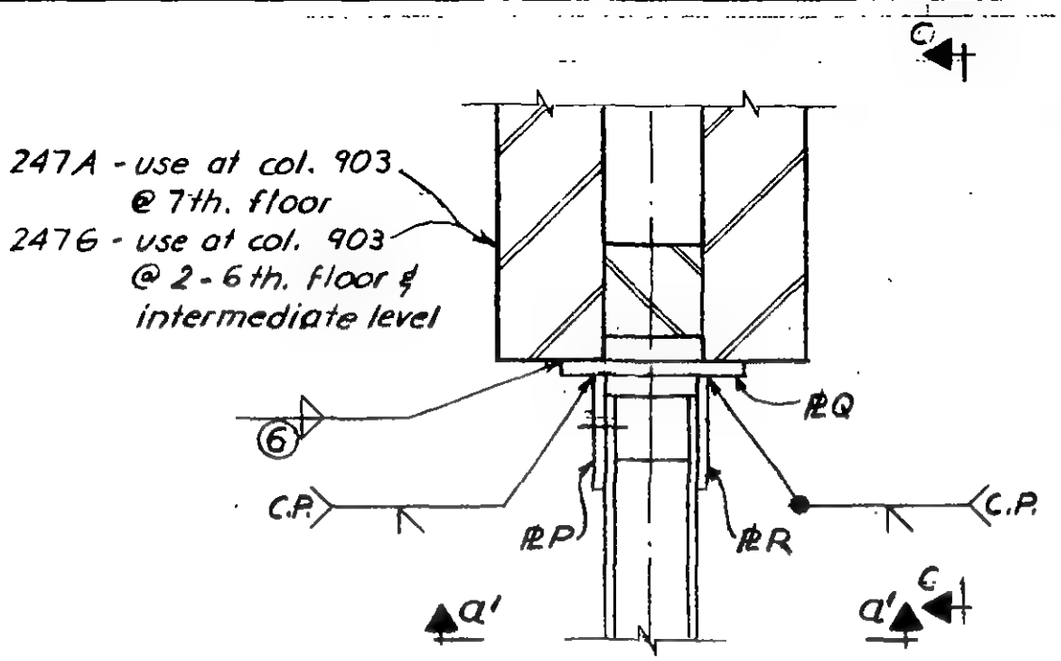

Plan A,G Alt.
use where indicated

Center ℄ P as shown for ℄ R unless previously approved for fabrication or for 247G.

Remove erection seat on columns approved for fabrication if necessary to clear ℄ P.

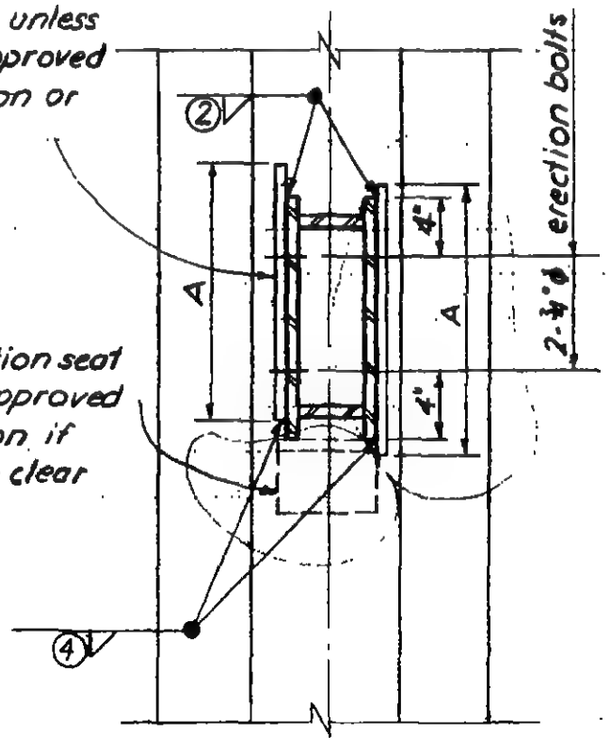

Section a-a
(a'-a' similar)

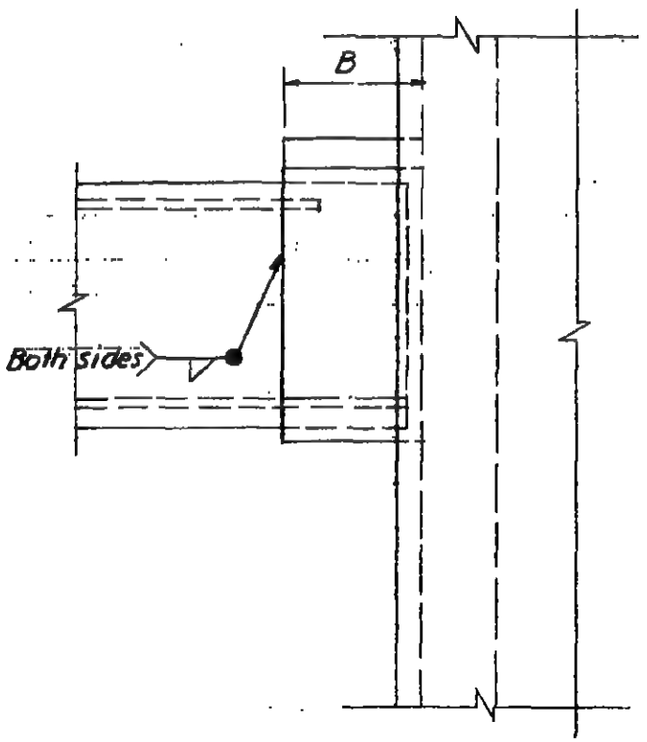

Section b-b

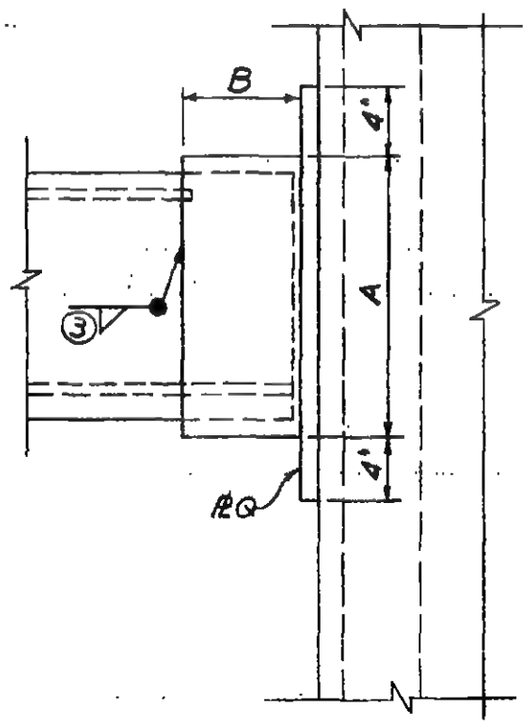

Section c-c

LICENSED PROFESSIONAL ENGINEER
LESLIE E. ROBERTSON
No. 34360
UNIVERSITY OF THE STATE OF NEW YORK

6-AB1-53 Alt.

WORTHINGTON, SKILLING, HELLE & JACKSON — Civil & Structural Engineers

PROJECT THE WORLD TRADE CENTER | TITLE SCHEDULE FOR DETAIL 247 A-F | DATE 7-28-67

DIVISIONS

12-7-67

12-21-67

	247A	247B	247C	270D	247E	247F
PLATES						
P	5/8"	5/8"	3/4"	5/8"	3/4"	5/8"
ANGLES						
S	5x3x5/16x0'-8"	5x3x5/16x0'-8"	5x3x5/16x0'-8"	5x3x5/16x0'-6"	5x3x5/16x0'-8"	5x3x5/16x0'-6"
WELDS						
①	1/4	1/4	1/4	1/4	1/4	1/4
②	5/16	3/8	3/8	3/8	3/8	3/8
③	5/16	3/8	3/8	3/8	3/8	3/8
④	5/16	3/8	3/8	3/8	3/8	3/8
DIMENSIONS						
A	1'-6"	1'-6"	1'-6"	1'-4"	1'-0"	1'-4"
B	0'-11"	0'-11"	0'-11"	0'-11"	0'-11"	0'-6"

LESLIE E. ROBERTSON — No. 34360 — CITY OF THE STATE OF NEW YORK

G-AB1-53.1

SKILLING - HELLE - CHRISTIANSEN - ROBERTSON Structural & Civil Engineers

PROJECT THE WORLD TRADE CENTER | TITLE SCHEDULE FOR DETAIL 247 A,C,E,6 ALT. | DATE 12-21-67

EVISIONS

* PL Q is used only at specified locations

	247 A	247 C	247 E	247 6		
PLATES						
P	5/8"	3/4"	3/4"	3/8"		
Q	1"*	—	—	3/4"*		
R	5/8	3/4	3/4	3/8		
DIMENSIONS						
A	1'-6"	1'-6"	1'-0"	1'-4"		
B	0'-11"	0'-11"	0'-11"	0'-4"		
WELDS						
1	—	—	—	—		
2	5/16	3/8	3/8	1/4		
3	5/16	3/8	3/8	1/4		
4	5/16	3/8	3/8	1/4		
5	3/4	7/8	7/8	1/2		
6	7/8	—	—	1/2		

LICENSED PROFESSIONAL ENGINEER LESLIE E. ROBERTSON No. 34360 UNIVERSITY OF THE STATE OF NEW YORK

6-AB1-53.1 Alt.

WORTHINGTON, SKILLING, HELLE & JACKSON — Civil & Structural Engineers

PROJECT THE WORLD TRADE CENTER | TITLE SCHEDULE FOR DETAIL 247 | DATE 8-6-67

REVISIONS

	247G
PLATES	
P	3/8
ANGLES	
S	5x3x5/16x0'-6"
WELDS	
①	1/4
②	1/4
③	1/4
④	1/4
DIMENSIONS	
A	1'-4"
B	0'-4"

LICENSED PROFESSIONAL ENGINEER
LESLIE E. ROBERTSON
No. 34360
CITY OF THE STATE OF NEW YORK

G-AB1-53.2

SKILLING - HELLE - CHRISTIANSEN - ROBERTSON Structural & Civil Engineers

PROJECT THE WORLD TRADE CENTER | TITLE CONNECTION DETAIL 24TH | DATE 9-29-67

REVISIONS

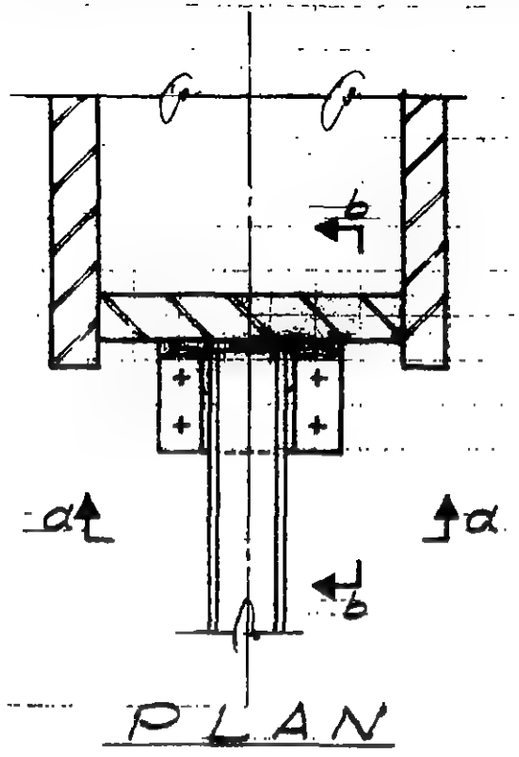

PLAN

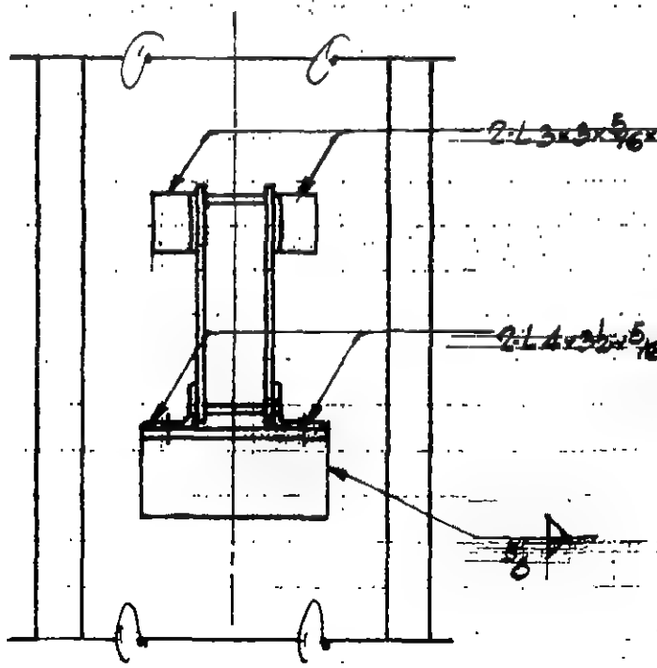

Section a-a

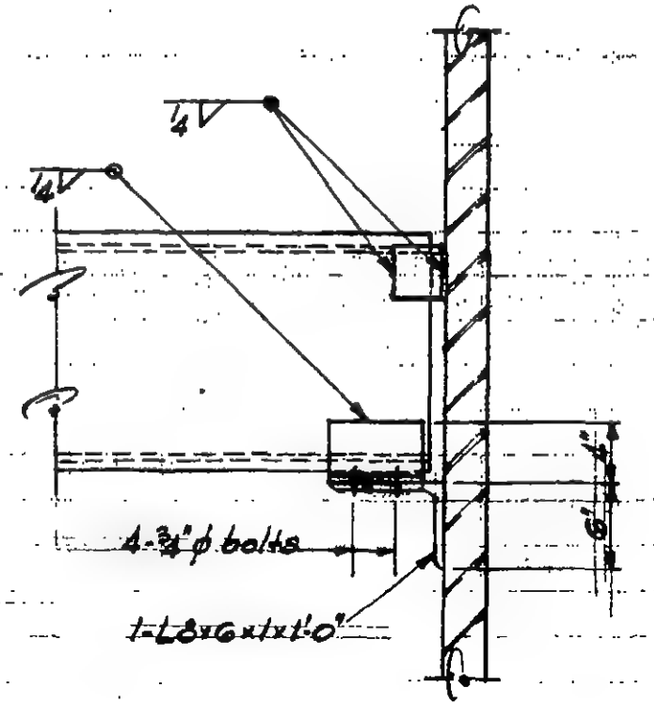

Section b-b

LICENSED PROFESSIONAL ENGINEER
LESLIE E. ROBERTSON
No. 34360
UNIVERSITY OF THE STATE OF NEW YORK

G-AB1-53.3

SKILLING - HELLE - CHRISTIANSEN - ROBERTSON — Structural & Civil Engineers

PROJECT: THE WORLD TRADE CENTER | TITLE: CONNECTION DETAIL 24TI | DATE: 7-24-68

REVISIONS

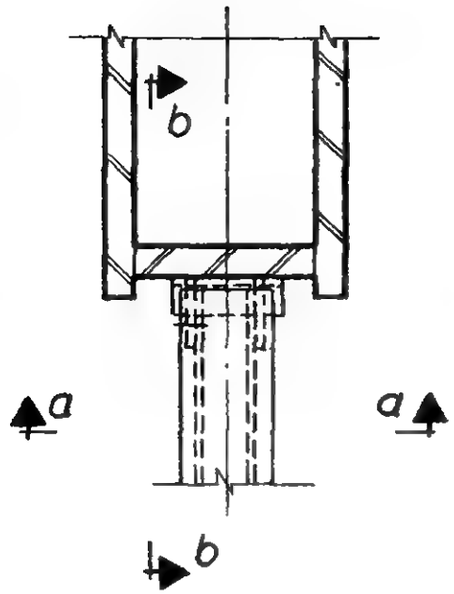

Plan

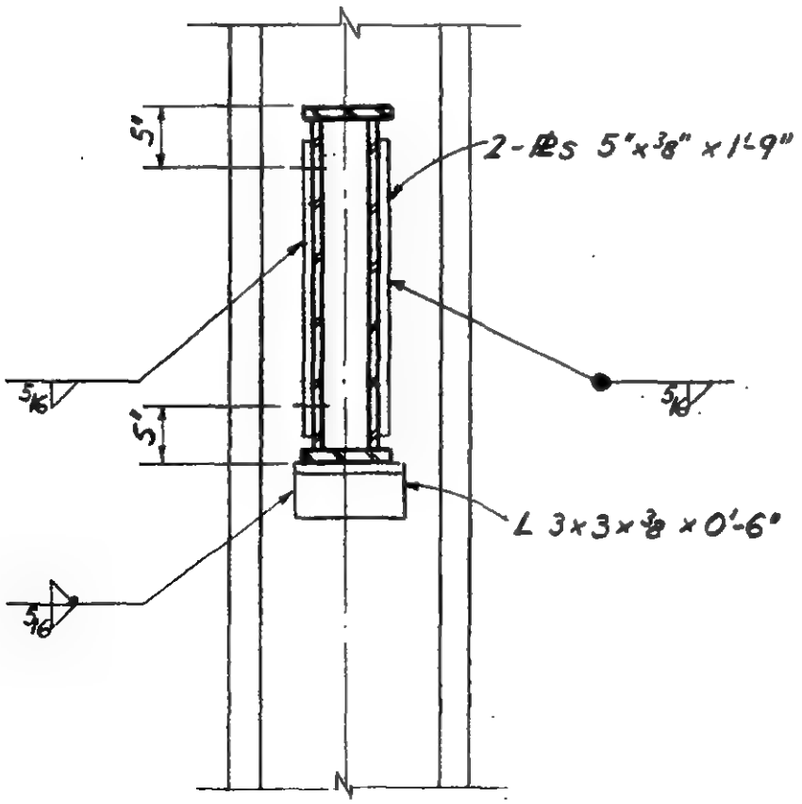

Section a-a

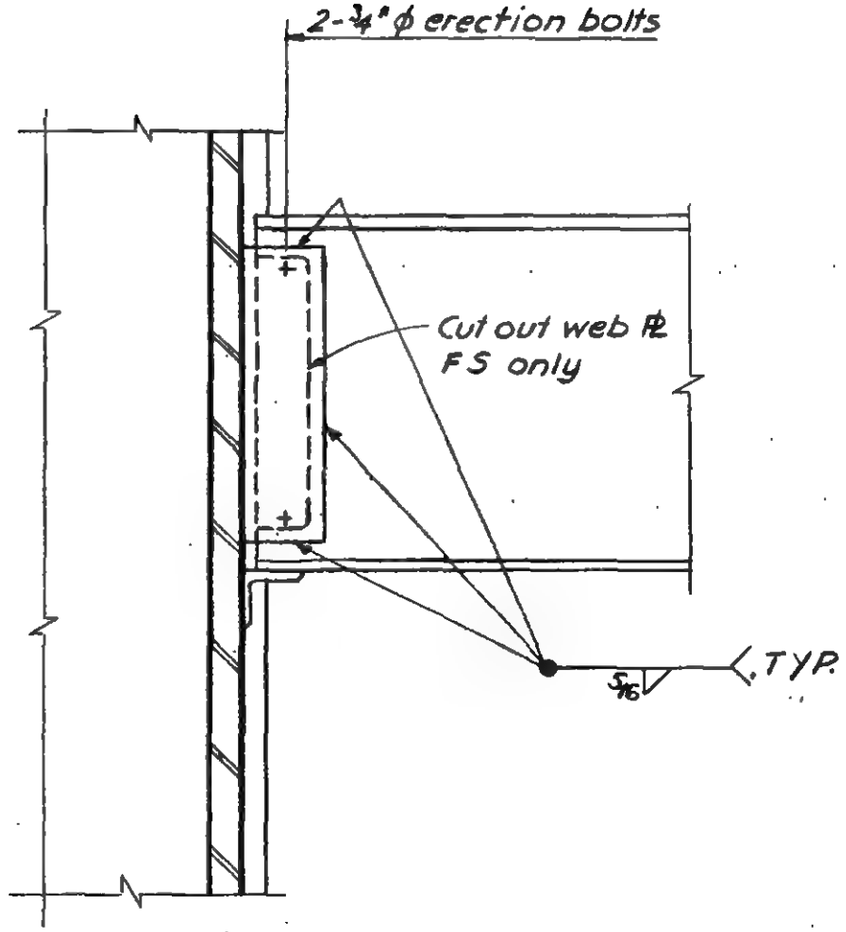

Section b-b

LICENSED PROFESSIONAL ENGINEER
LESLIE E. ROBERTSON
No. 34360
UNIVERSITY OF THE STATE OF NEW YORK

6-AB1-53.4

WORTHINGTON, SKILLING, HELLE & JACKSON — Civil & Structural Engineers

PROJECT: THE WORLD TRADE CENTER | TITLE: CONNECTION DETAIL 248A | DATE: 6-30-67

REVISIONS
10-5-67

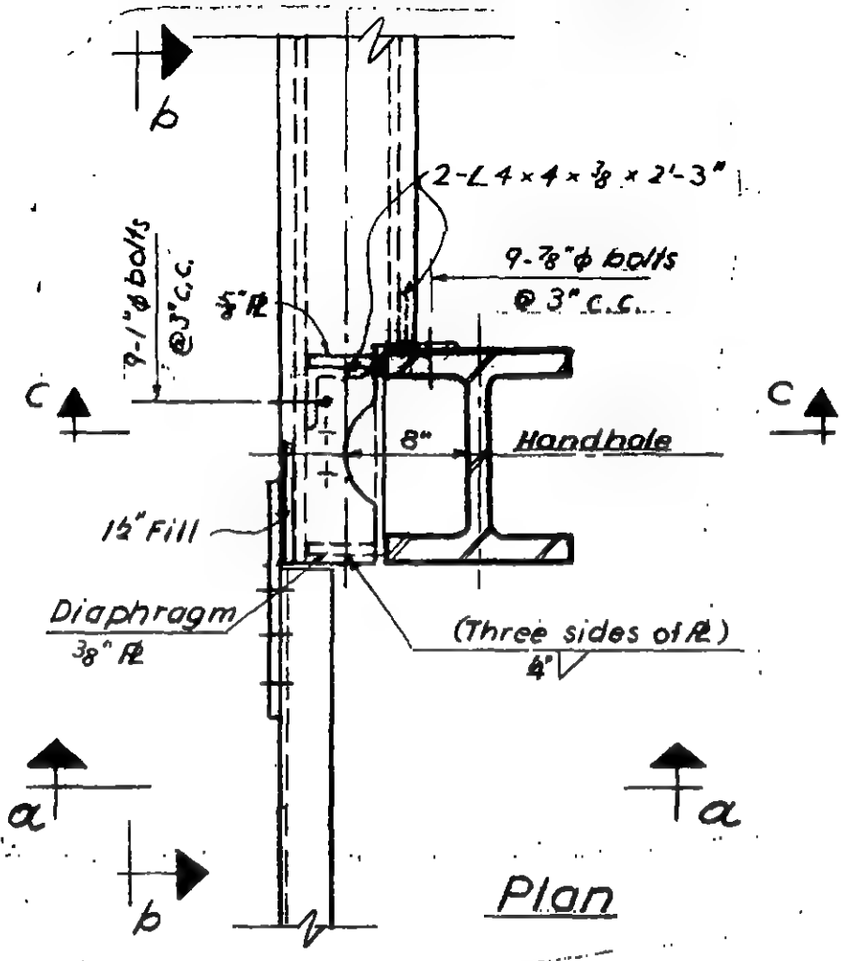

Plan

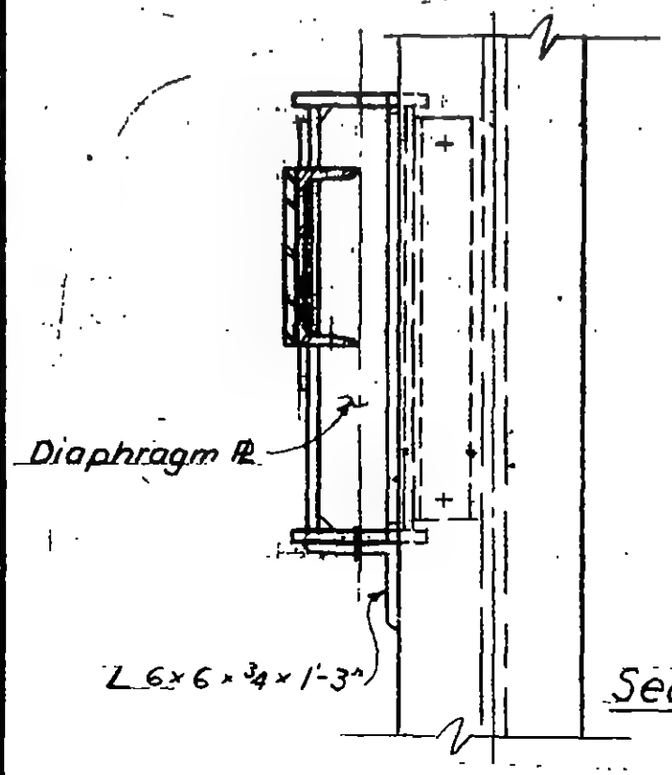

Section a-a

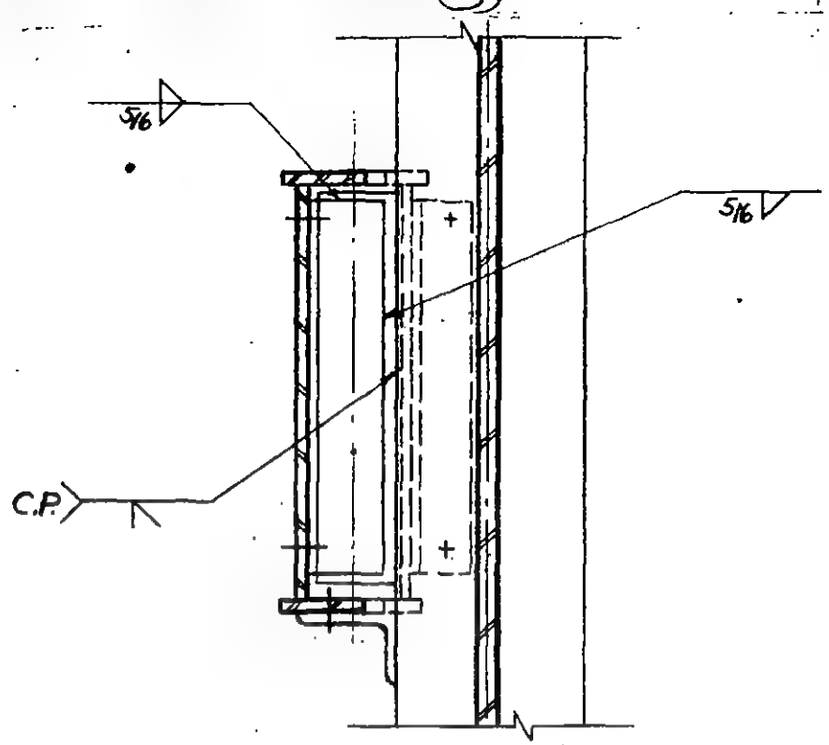

Section c-c

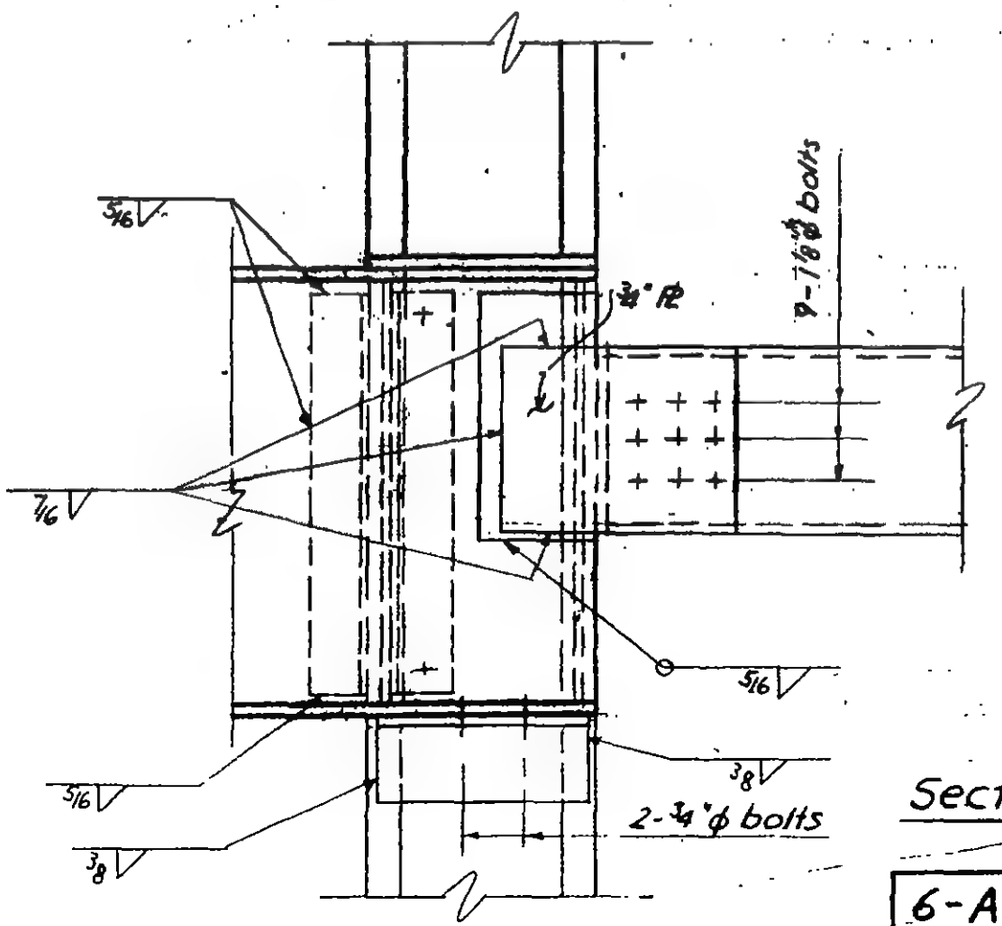

Section b-b

6-AB1-54

LICENSED PROFESSIONAL ENGINEER
LESLIE E. ROBERTSON
No. 34360
UNIVERSITY OF THE STATE OF NEW YORK

WORTHINGTON, SKILLING, HELLE & JACKSON — Civil & Structural Engineers

PROJECT THE WORLD TRADE CENTER | TITLE CONNECTION DETAIL 2A9 A,B,C | DATE 5-1-67

REVISIONS

5-9-67
7-28-67
8-5-67
9-15-67
11-10-67
12-7-67

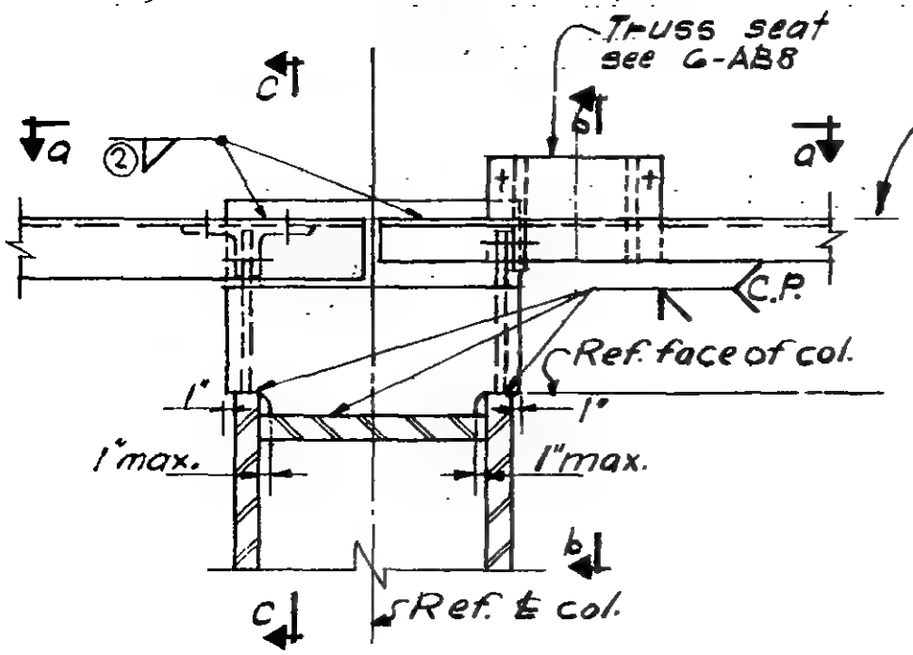

Plan

Note: See framing plan for location of beam

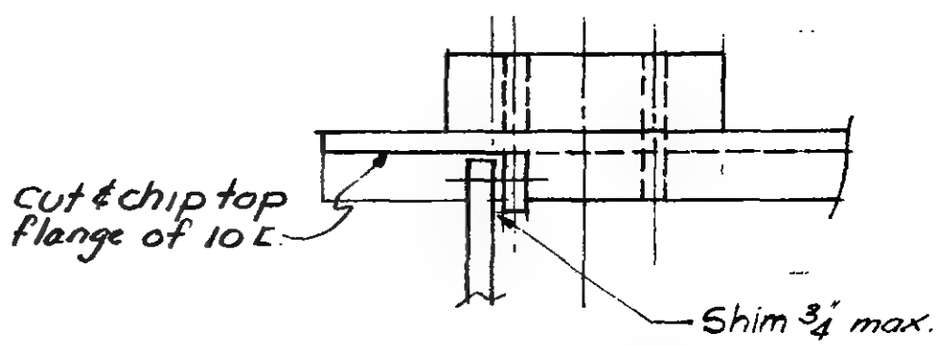

SECTION d-d

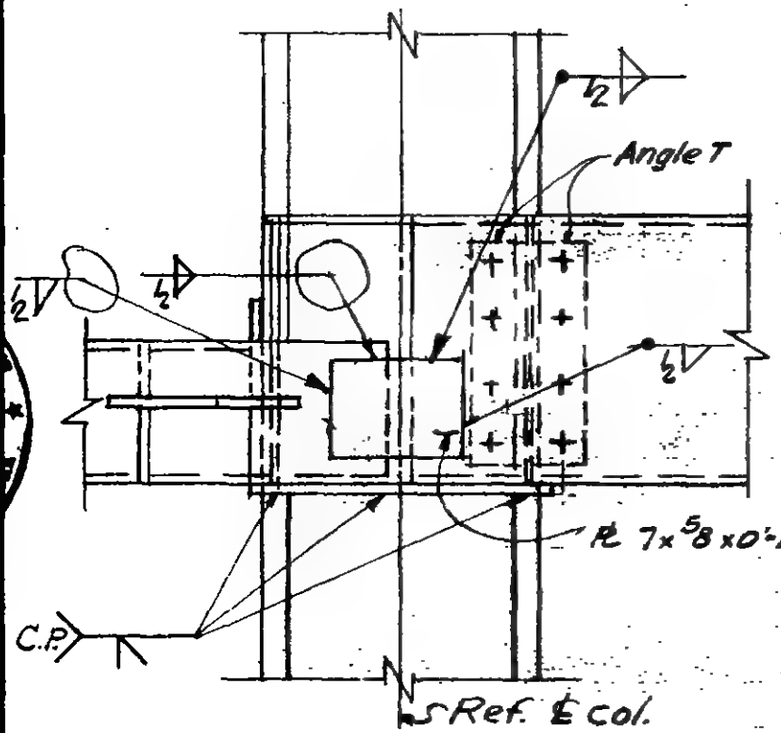

Section a-a

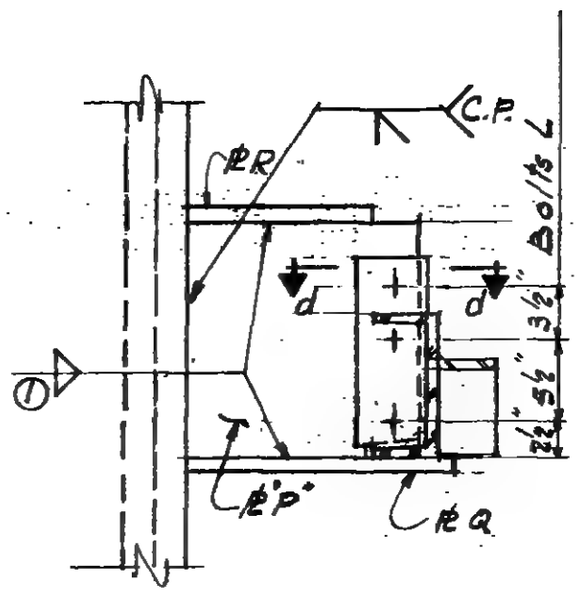

SECTION b-b

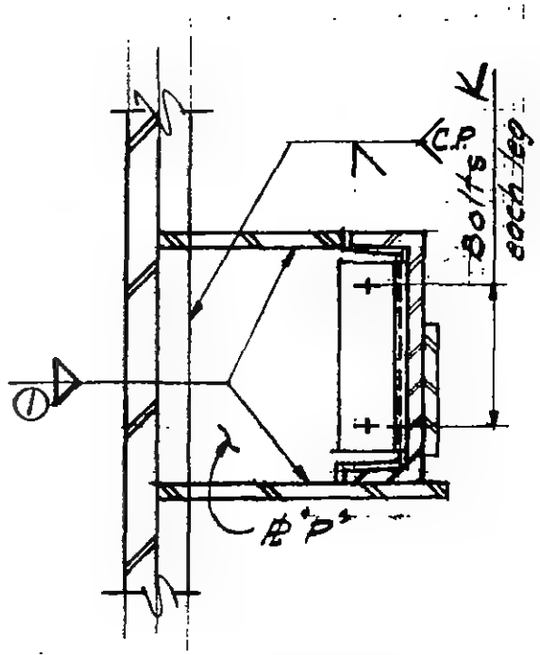

SECTION C-C

LICENSED PROFESSIONAL ENGINEER LESLIE E. ROBERTSON No. 24960 UNIVERSITY OF THE STATE OF NEW YORK

6-AB1-55

SKILLING - HELLE - CHRISTIANSEN - ROBERTSON Structural & Civil Engineers

PROJECT: THE WORLD TRADE CENTER | TITLE: SCHEDULE FOR DETAIL 249 A-C | DATE: 7-28-67

REVISIONS

7-15-67

11-10-67

	249A	249B	249C			
PLATES						
P	7/8"	7/8" 1/2"	7/8" 1/2"			
Q	1"	1/2"	1/2"			
R	1"	1/2"	1/2"			
ANGLES						
T	4×3 1/2×3/8	4×3 1/2×5/16	4×3 1/2×5/16			
BOLTS						
K	5-7/8"ϕ	5-7/8"ϕ	5-7/8"ϕ			
L	3-1 1/8"ϕ	3-1"ϕ	3-1"ϕ			
WELDS						
①	3/8	3/8	3/8			
②	3/8	3/8	3/8			

6-ABI-55.1

WORTHINGTON, SKILLING, HELLE & JACKSON — Civil & Structural Engineers

PROJECT: THE WORLD TRADE CENTER | TITLE: CONNECTION DETAIL 251 A, B, D | DATE: 5-22-67

REVISIONS
8-14-67
9-15-67

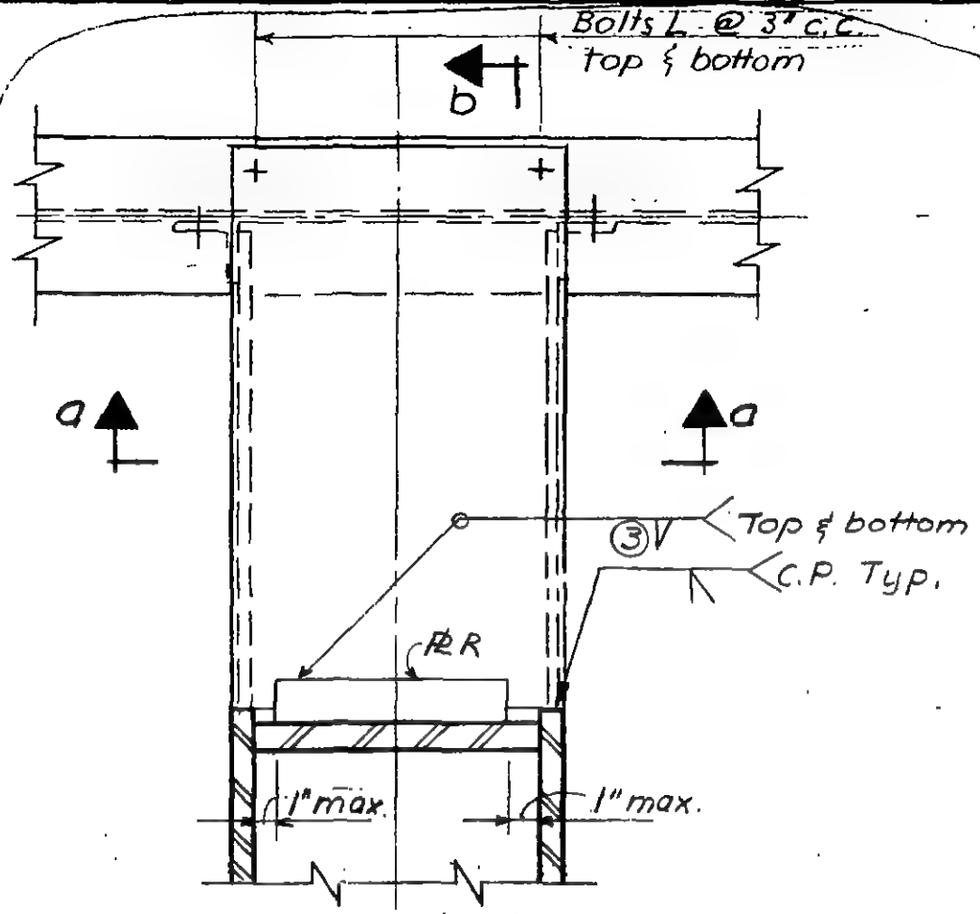

Plan 251 A & B

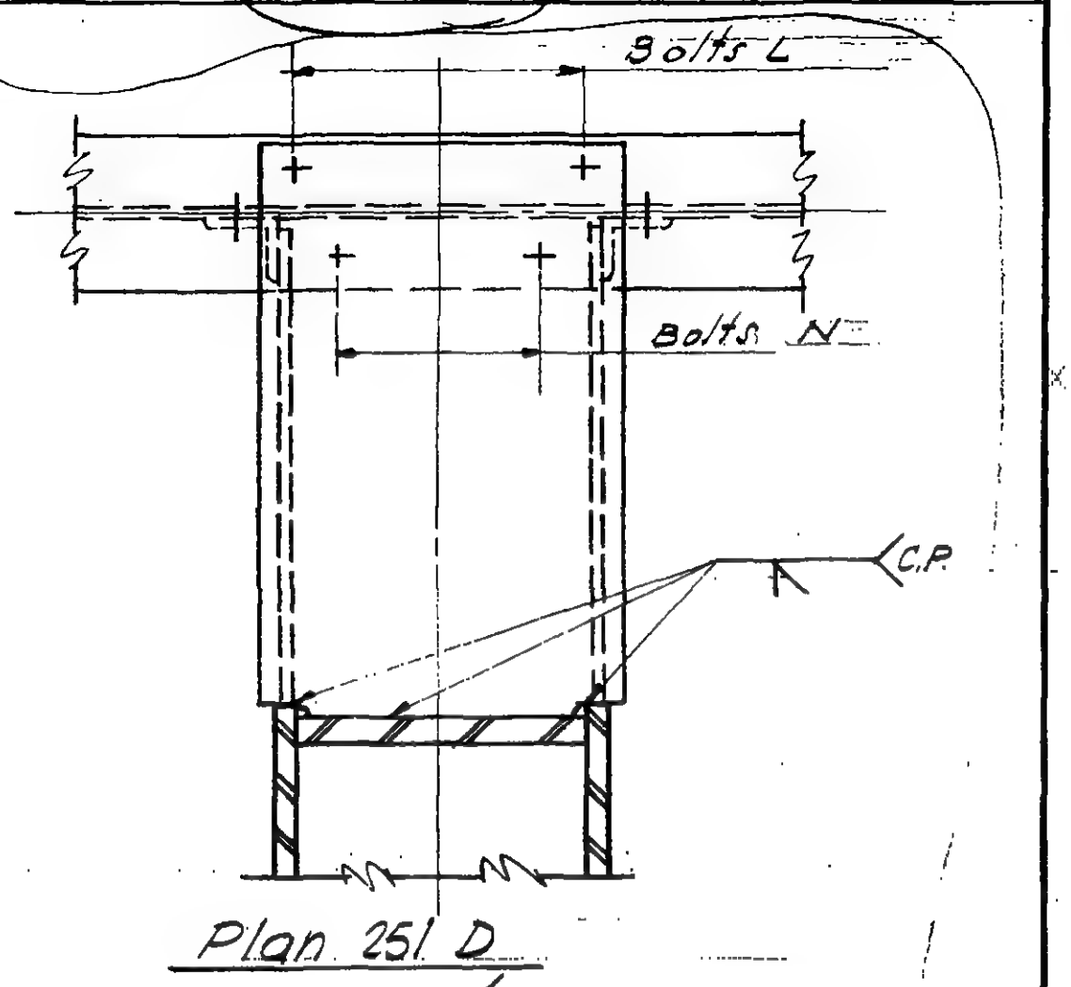

Plan 251 D

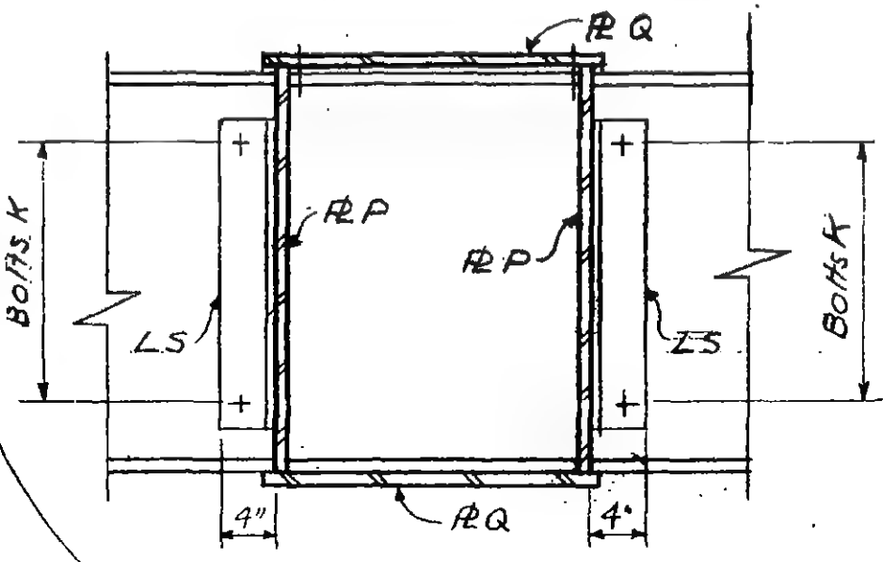

Section a-a

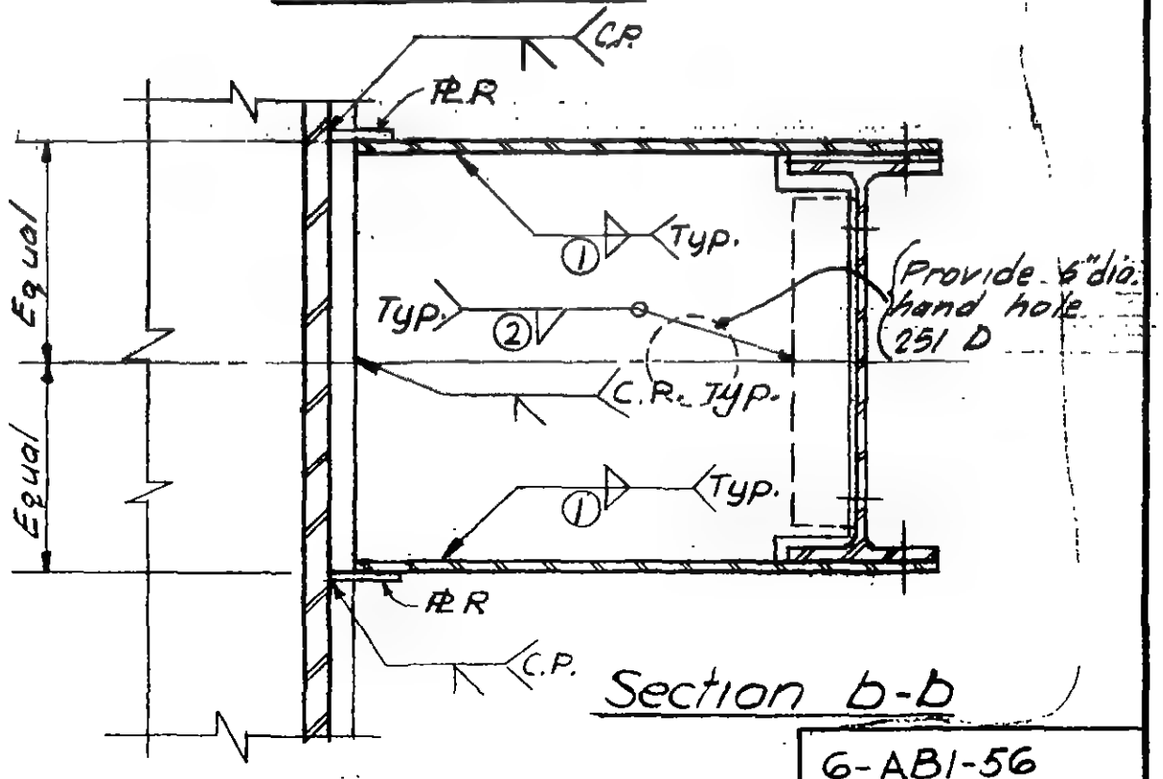

Section b-b

6-AB1-56

LICENSED PROFESSIONAL ENGINEER
LESLIE E. ROBERTSON
No. 34360
UNIVERSITY OF THE STATE OF NEW YORK

SKILLING - HELLE - CHRISTIANSEN - ROBERTSON Structural & Civil Engineers

PROJECT THE WORLD TRADE CENTER | TITLE CONNECTION DETAIL 259 C | DATE 8-14-67

REVISIONS

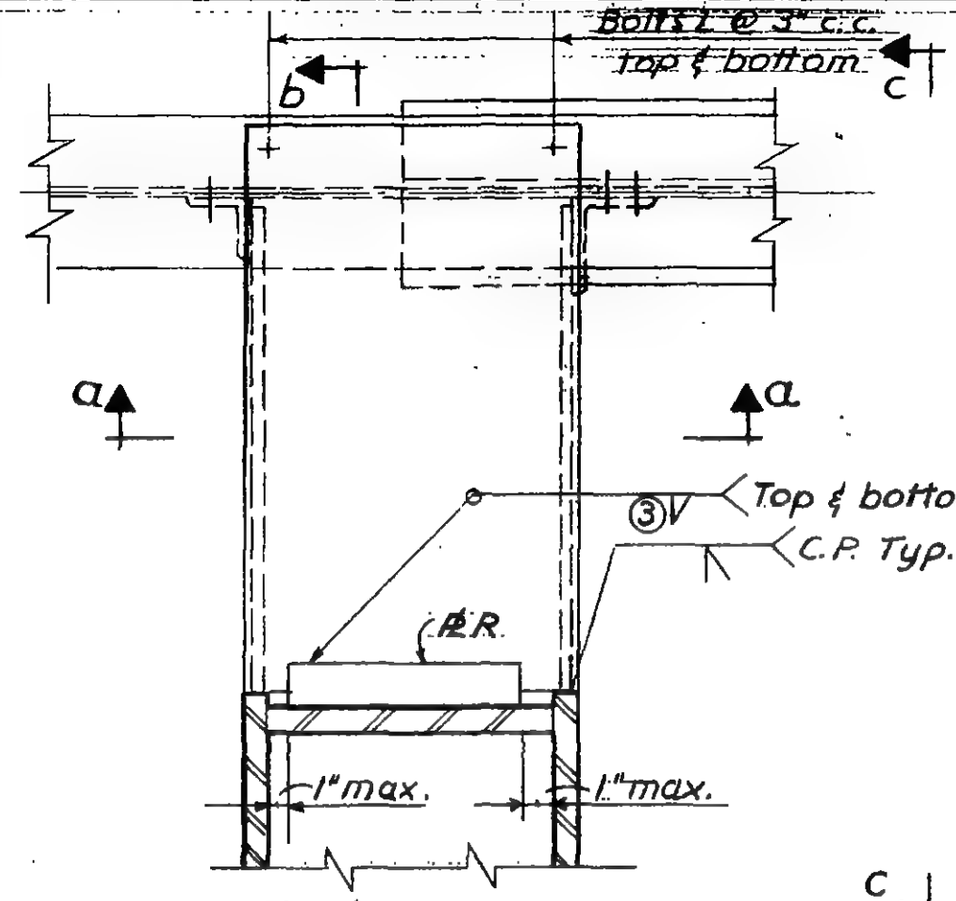

Plan

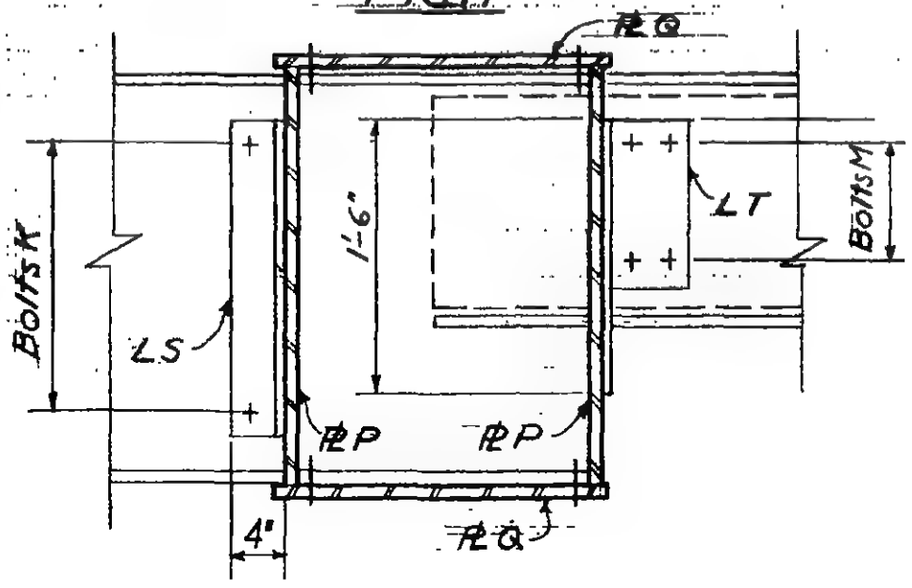

Section a-a

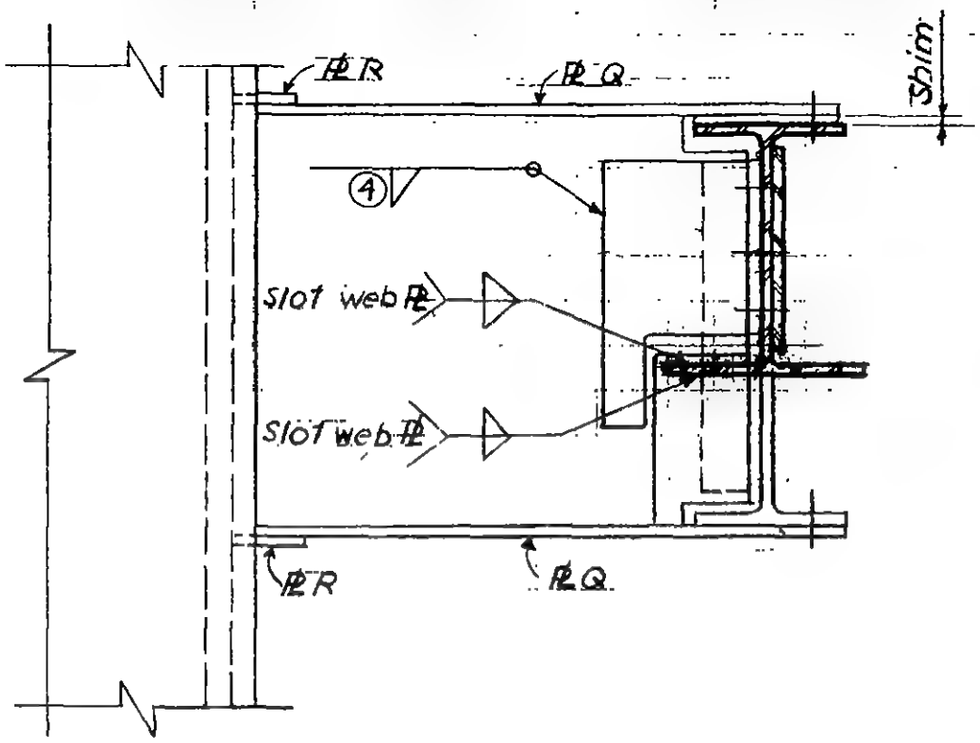

Section b-b

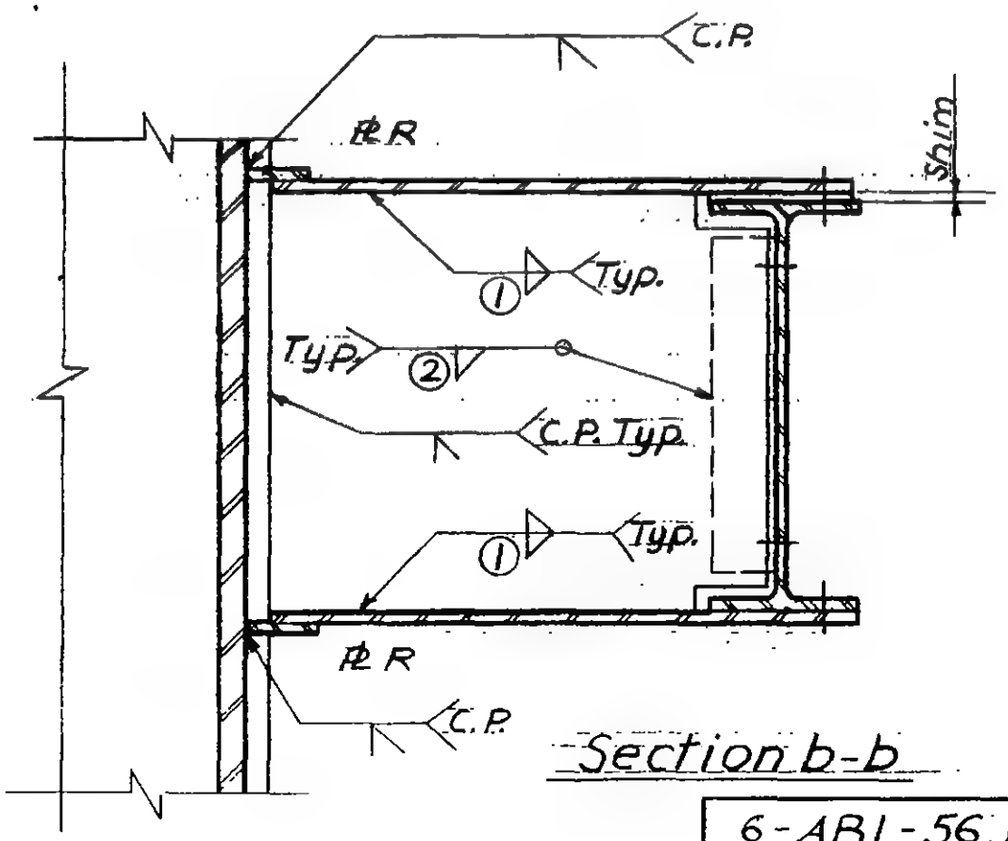

Section b-b

6-AB1-56.1

LICENSED PROFESSIONAL ENGINEER
LESLIE E. ROBERTSON
No. 34360
UNIVERSITY OF THE STATE OF NEW YORK

SKILLING - HELLE - CHRISTIANSEN - ROBERTSON Structural & Civil Engineers

PROJECT THE WORLD TRADE CENTER | TITLE SCHEDULE FOR DETAIL 251 A, B, C, D, E, F, G | DATE 8-14-67

REVISIONS
9-15-67
10-2-67

	251 A	251 B	251 C	251 D	251 E, G	251 F
PLATES						
P	1/2"	5/8"	1/2"	3/4	1 1/2	1/4"
Q	1/2"	5/8"	1/2"	5/8	5/8	5/8"
R	6" x 5/8"	6" x 7/8"	6" x 5/8"	—	1 1/2	—
ANGLES						
S	6 x 4 x 9/16 x 1'-8 1/2"	6 x 4 x 9/16 x 1'-8 1/2"	6 x 4 x 9/16 x 1'-8 1/2"	4 x 3 1/2 x 3/8	—	—
T	—	—	8 x 8 x 1	—	—	—
BOLTS						
K	7 - 1" ϕ	7 - 1" ϕ	7 - 1" ϕ	4 - 7/8" ϕ	2 - 3/4" ϕ	3 - 3/4" ϕ
L	6 - 3/4" ϕ	6 - 3/4" ϕ	6 - 3/4" ϕ	5 - 1 1/8" ϕ (A490)	4 - 3/4" ϕ	4 - 3/4" ϕ
M	—	—	8 - 1 1/8" ϕ	—	—	—
N	—	—	—	4 - 1 1/8" ϕ (490)	—	—
WELDS						
①	1/2	5/8	9/16	5/16	5/16"	5/16"
②	1/2	1/2	9/16	5/16	—	—
③	1/2	5/8	1/2	—	—	—
④	—	—	7/8	—	—	—

LICENSED PROFESSIONAL ENGINEER
LESLIE E. ROBERTSON
No. 34360
UNIVERSITY OF THE STATE OF NEW YORK

6-AB1-56.2

SKILLING - HELLE - CHRISTIANSEN - ROBERTSON Structural & Civil Engineers

PROJECT THE WORLD TRADE CENTER | TITLE CONNECTION DETAIL - 25th E, F, G, J, L, M | DATE 10-2-67

REVISIONS
-17-67
9-18-68

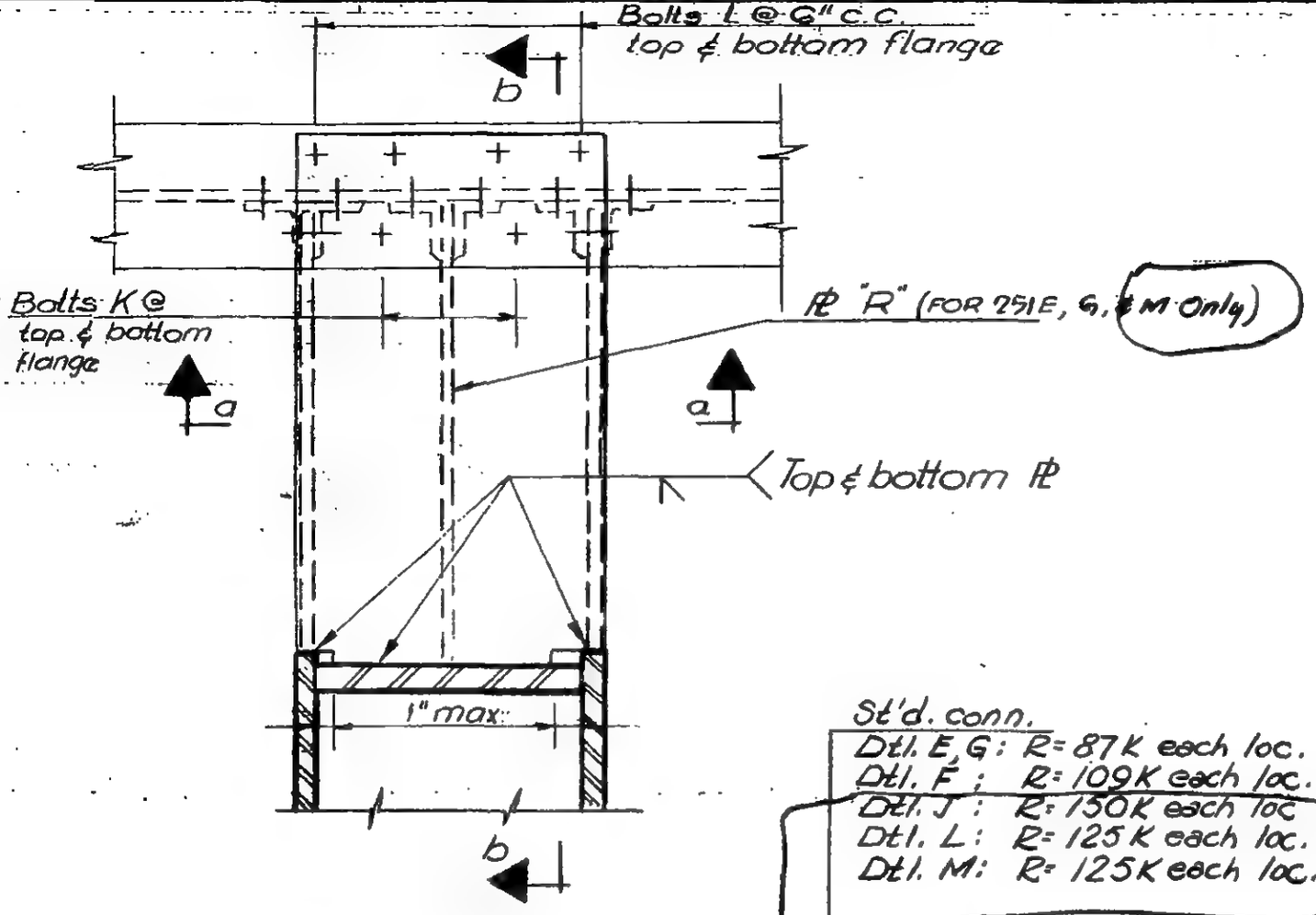

Plan

St'd. conn.
Dtl. E, G: R = 87K each loc.
Dtl. F: R = 109K each loc.
Dtl. J: R = 150K each loc.
Dtl. L: R = 125K each loc.
Dtl. M: R = 125K each loc.

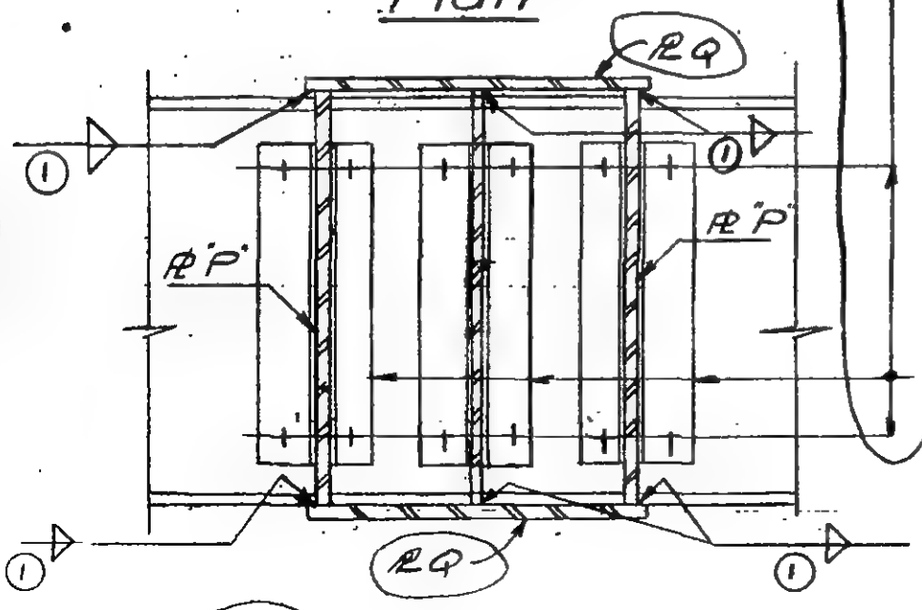

Section a-a

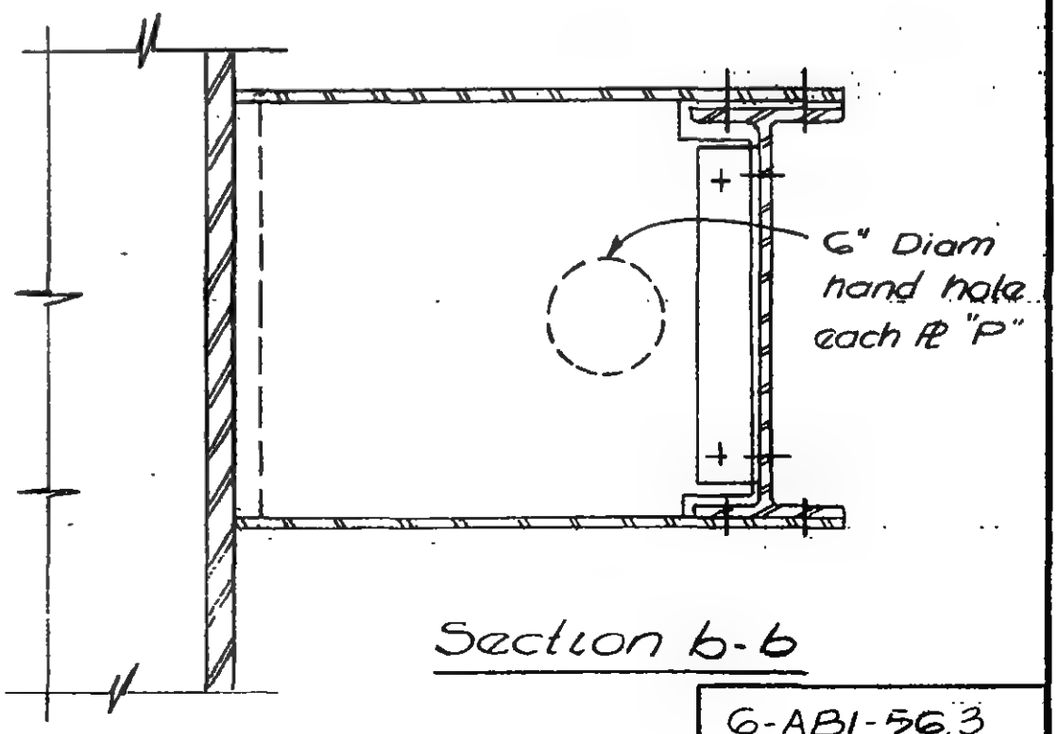

Section b-b

LICENSED PROFESSIONAL ENGINEER
LESLIE E. ROBERTSON
No. 34360
UNIVERSITY OF THE STATE OF NEW YORK

6-AB1-56.3

SKILLING - HELLE - CHRISTIANSEN - ROBERTSON Structural & Civil Engineers

PROJECT THE WORLD TRADE CENTER | TITLE CONNECTION DETAIL 251 H | DATE 10-2-67

REVISIONS

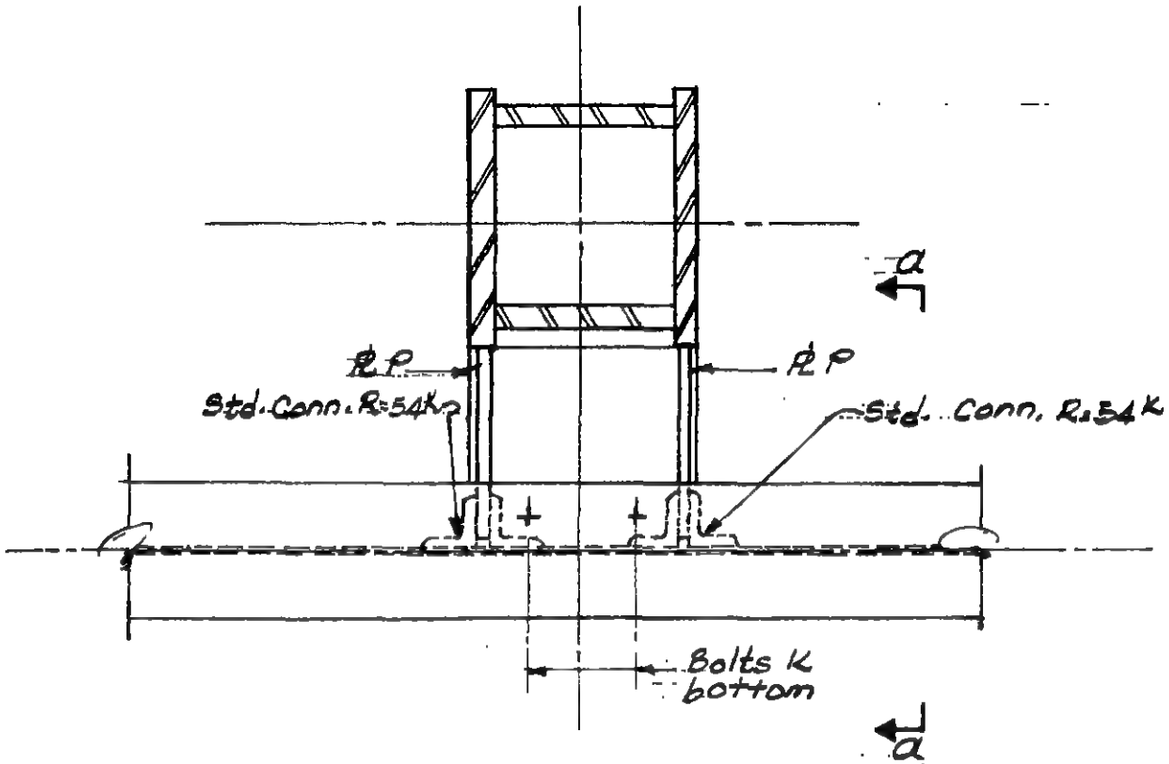

PLAN

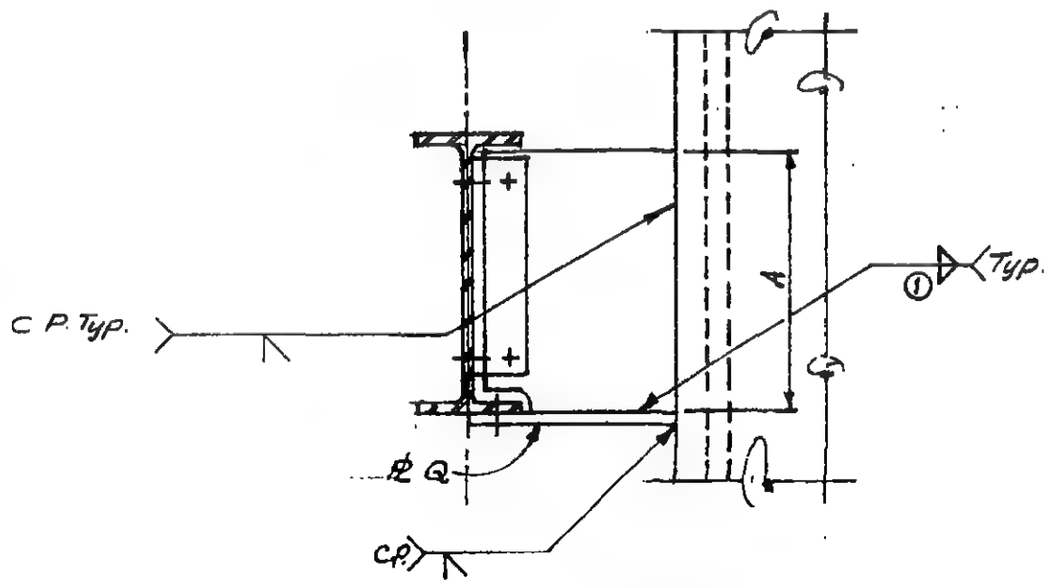

Section a-a

LICENSED PROFESSIONAL ENGINEER
LESLIE E. ROBERTSON
No. 34360
UNIVERSITY OF THE STATE OF NEW YORK

G-AB1-56.4

SKILLING - HELLE - CHRISTIANSEN - ROBERTSON Structural & Civil Engineers

PROJECT THE WORLD TRADE CENTER | TITLE SCHEDULE FOR DETAIL 251 H, J, L, M | DATE 10-2-67

REVISIONS
9-18-68

	251 H	251 J	251 L	251 M
PLATE				
P	7/8"	1 1/4"	1 1/4"	1 1/4"
Q	7/8"	5/8"	3/4"	1"
DIMENSION				
A	1'-10"	-	-	-
BOLTS				
K	3-3/4" ϕ	3-3/4" ϕ	4-1" ϕ	4-1" ϕ
L	-	4-3/4" ϕ	4-1" ϕ	6-1" ϕ
WELD				
①	5/16	5/16	3/8	3/8

LICENSED PROFESSIONAL ENG'RING
LESLIE E. ROBERTSON
No. 34360
UNIVERSITY OF THE STATE OF NEW YORK

G-ABI-56.5

WORTHINGTON, SKILLING, HELLE & JACKSON — Civil & Structural Engineers

PROJECT: THE WORLD TRADE CENTER | TITLE: CONNECTION DETAIL 252A | DATE: 6-5-67

REVISIONS

1 10-2-67

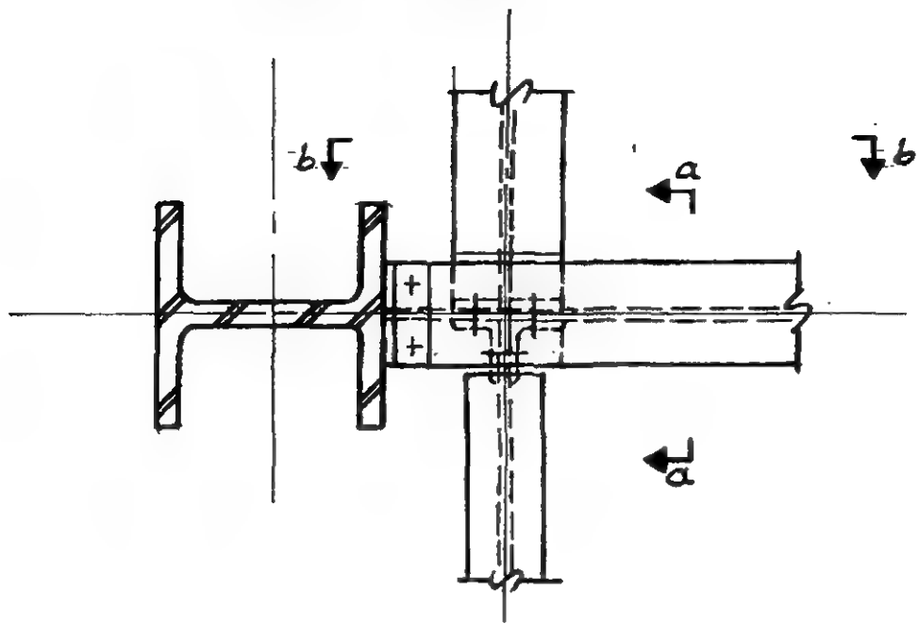

PLAN

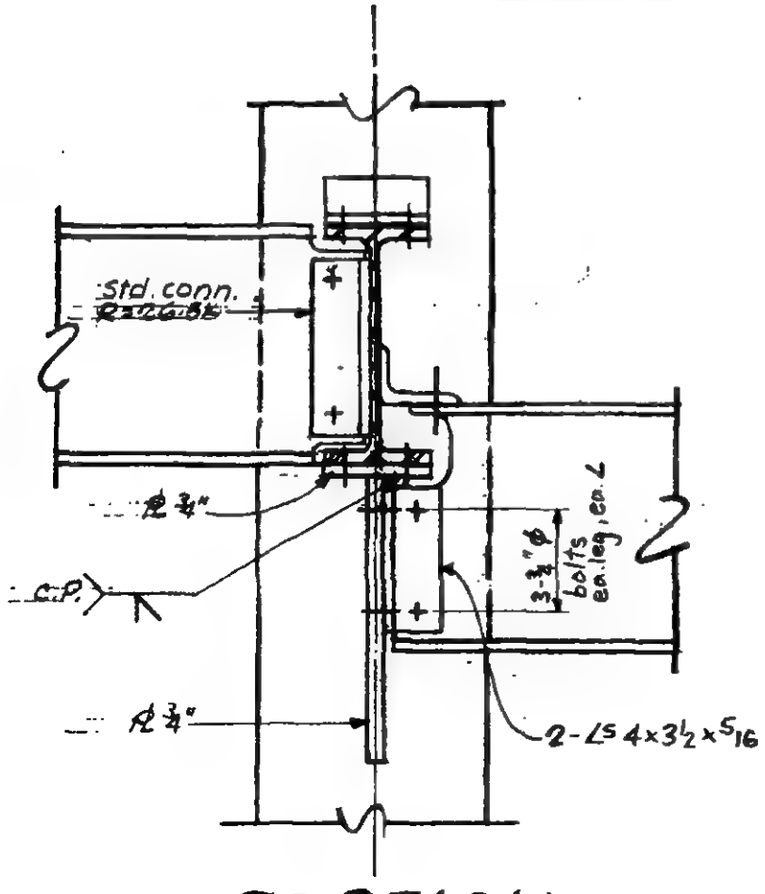

SECTION a-a

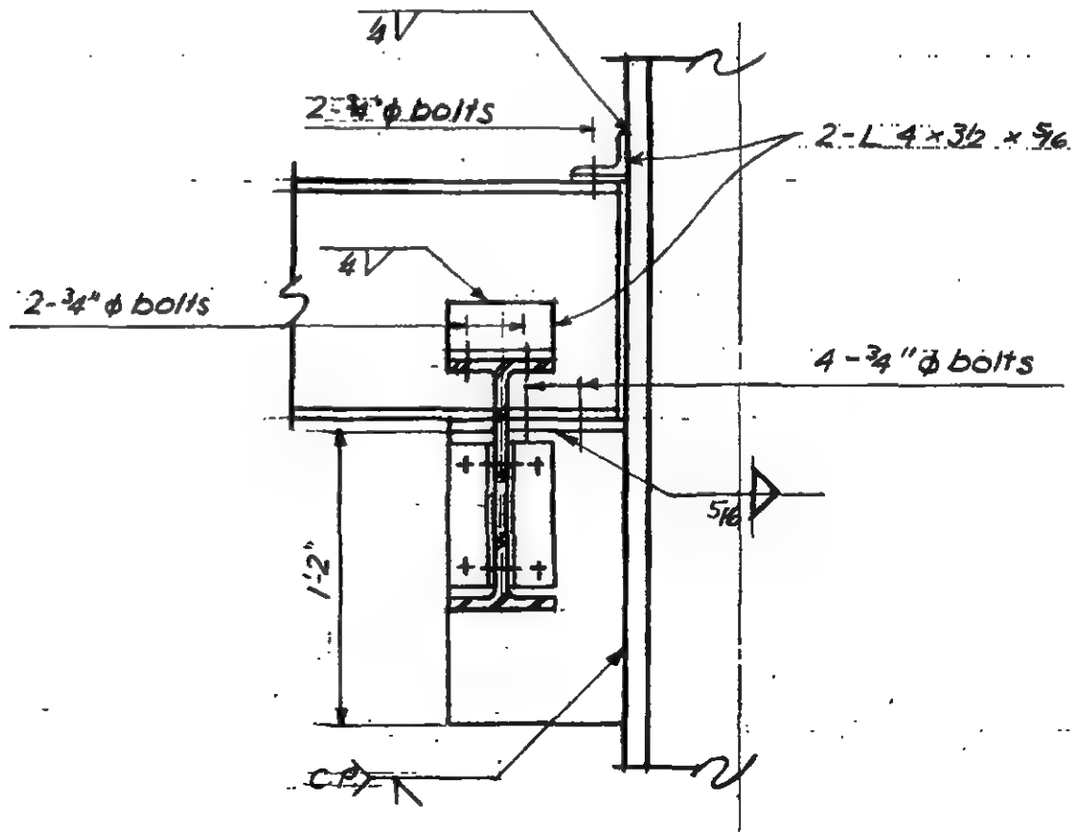

SECTION b-b

6-AB1-57

LICENSED PROFESSIONAL ENGINEER — LESLIE E. ROBERTSON — No. 34360 — UNIVERSITY OF THE STATE OF NEW YORK

WORTHINGTON, SKILLING, HELLE & JACKSON — Civil & Structural Engineers

PROJECT THE WORLD TRADE CENTER | TITLE CONNECTION DETAIL 253 A | DATE 6-30-67

REVISIONS

10-5-67

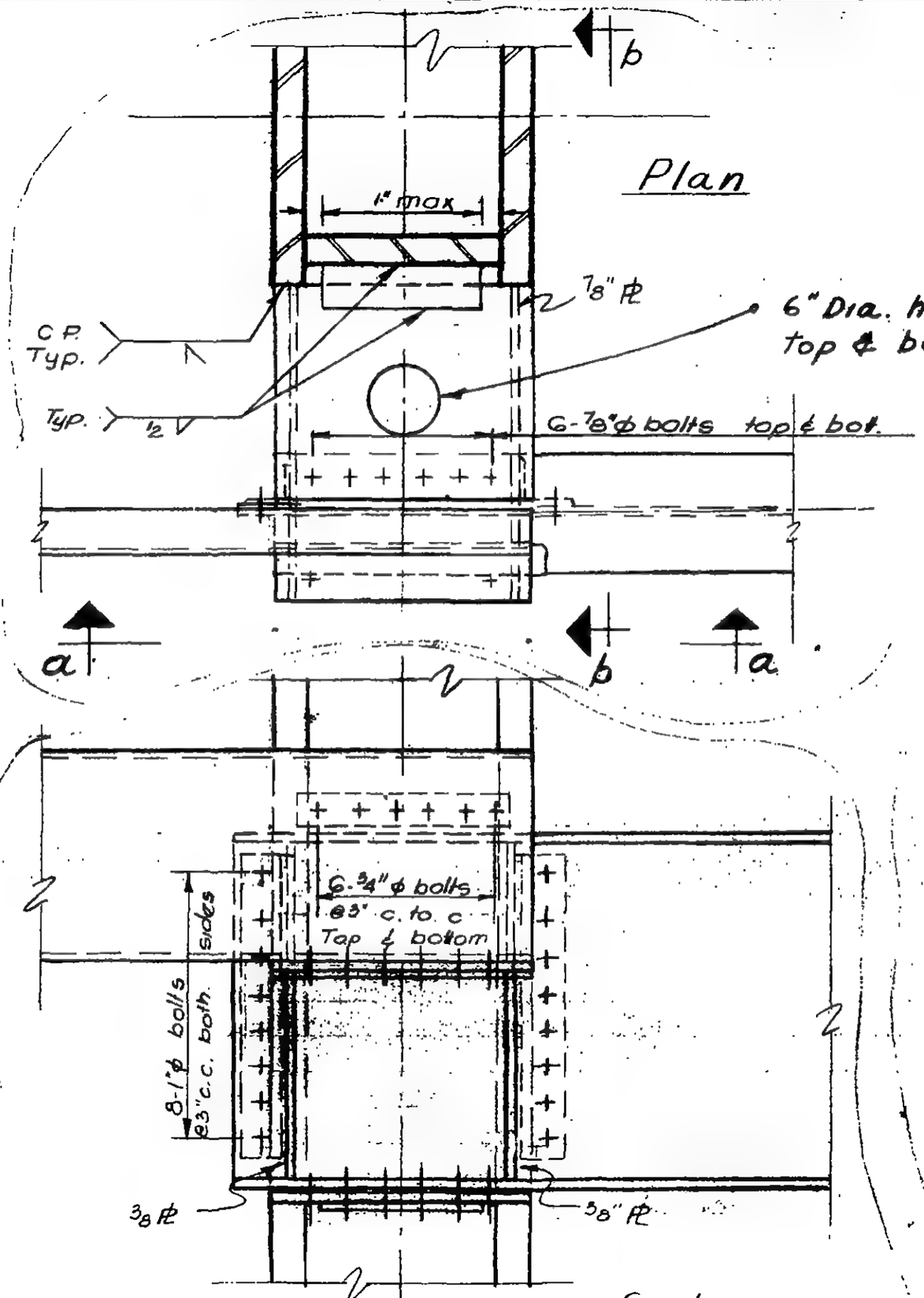

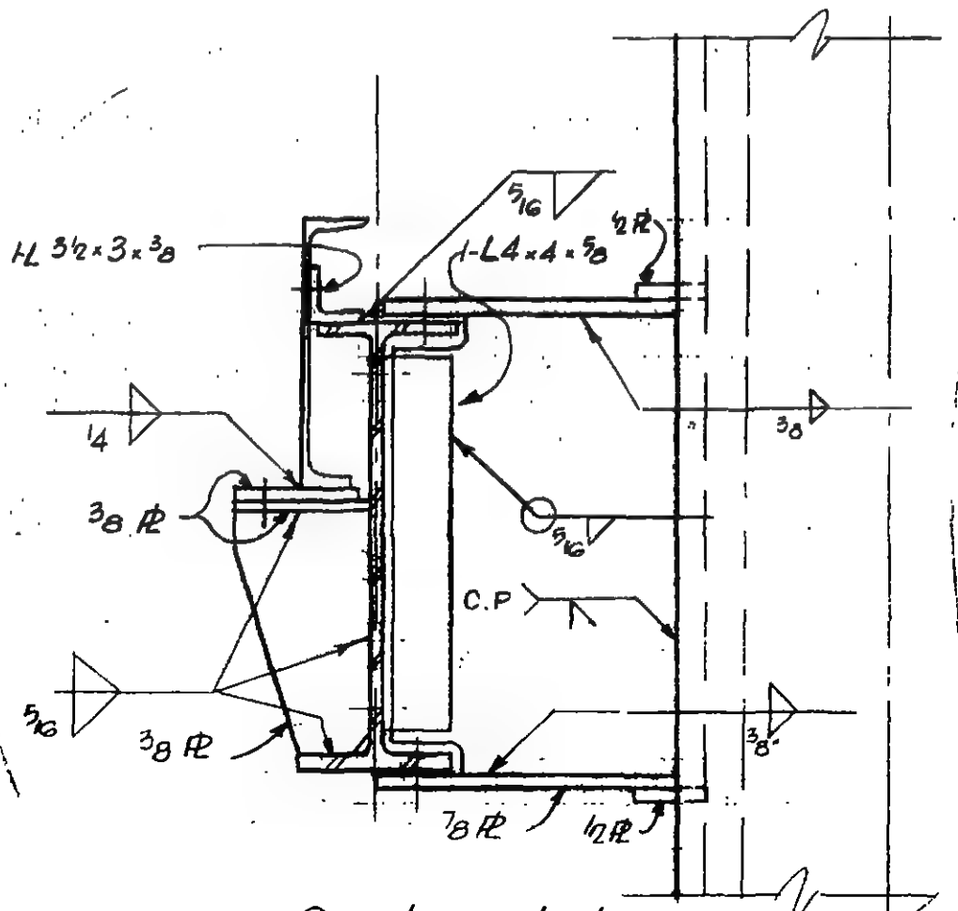

LICENSED PROFESSIONAL ENGINEER — LESLIE E. ROBERTSON — No. 34360 — UNIVERSITY OF THE STATE OF NEW YORK

6-ABI-58

WORTHINGTON, SKILLING, HELLE & JACKSON — Civil & Structural Engineers

PROJECT: THE WORLD TRADE CENTER | TITLE: [redacted]CTION [redacted] A, B, C, (F) | DATE: [redacted]

REVISIONS

5-9-67
7-28-67
9-15-67
11-14-67
5-6-68

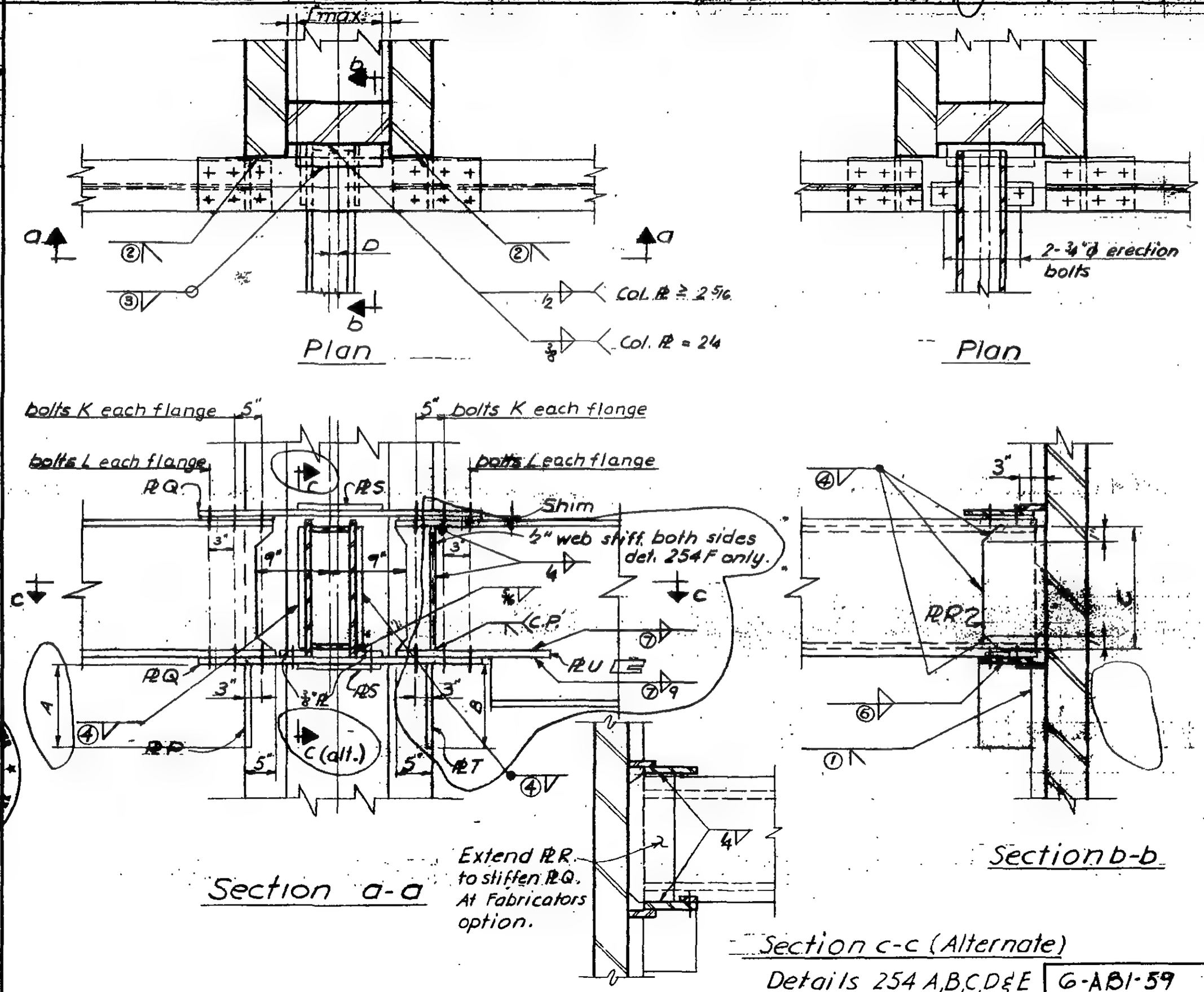

Details 254 A,B,C,D&E | 6-AB1-59

LICENSED PROFESSIONAL ENGINEER LESLIE E. ROBERTSON No. 34360 UNIVERSITY OF THE STATE OF NEW YORK

SKILLING - HELLE - CHRISTIANSEN - ROBERTSON Structural & Civil Engineers

PROJECT THE WORLD TRADE CENTER | TITLE SCHEDULE FOR DETAIL 254 A, B, C, F | DATE 7-28-67

REVISIONS

	254 A	254 B	254 C	254 F
PLATES				
P	3/8"	3/8"	3/8"	3/8"
Q	1/2"	1/2"	1/2"	1/2"
R	4 x 5/8 x 1'-2"	4 x 3/4 x 1'-2"	4 x 5/8 x 1'-2"	4 x 3/4 x 1'-2"
S	—	1/2"	1/2"	1/2"
T	3/8"	3/8"	3/8"	3/4"
U	—	—	—	6 x 1/2
DIMENSIONS				
A	1'-0"	1'-0"	1'-0"	1'-0"
C	1'-2"	1'-2"	1'-2"	1'-2"
B	—	—	—	1'-2"
BOLTS				
K	4 - 3/4 ϕ	4 - 1" ϕ	4 - 1" ϕ	4 - 1" ϕ
L	—	2 - 1" ϕ	2 - 1" ϕ	2 - 1" ϕ
WELDS				
①	C.P.	C.P.	C.P.	C.P.
②	C.P.	C.P.	C.P.	C.P.
③	—	7/16	7/16	7/16
④	5/8	3/4	5/8	3/4
⑤	—	C.P.	C.P.	C.P.
⑥	5/16	5/16	5/16	5/16
⑦	—	—	—	3/8

LICENSED PROFESSIONAL ENG'NEER
LESLIE E. ROBERTSON
No. 34360
UNIVERSITY OF THE STATE OF NEW YORK

6-AB1-59.1

SKILLING - HELLE - CHRISTIANSEN - ROBERTSON Structural & Civil Engineers

PROJECT THE WORLD TRADE CENTER | TITLE CONNECTION DETAIL 254 D | DATE 12-21-67

REVISIONS

7-17-68

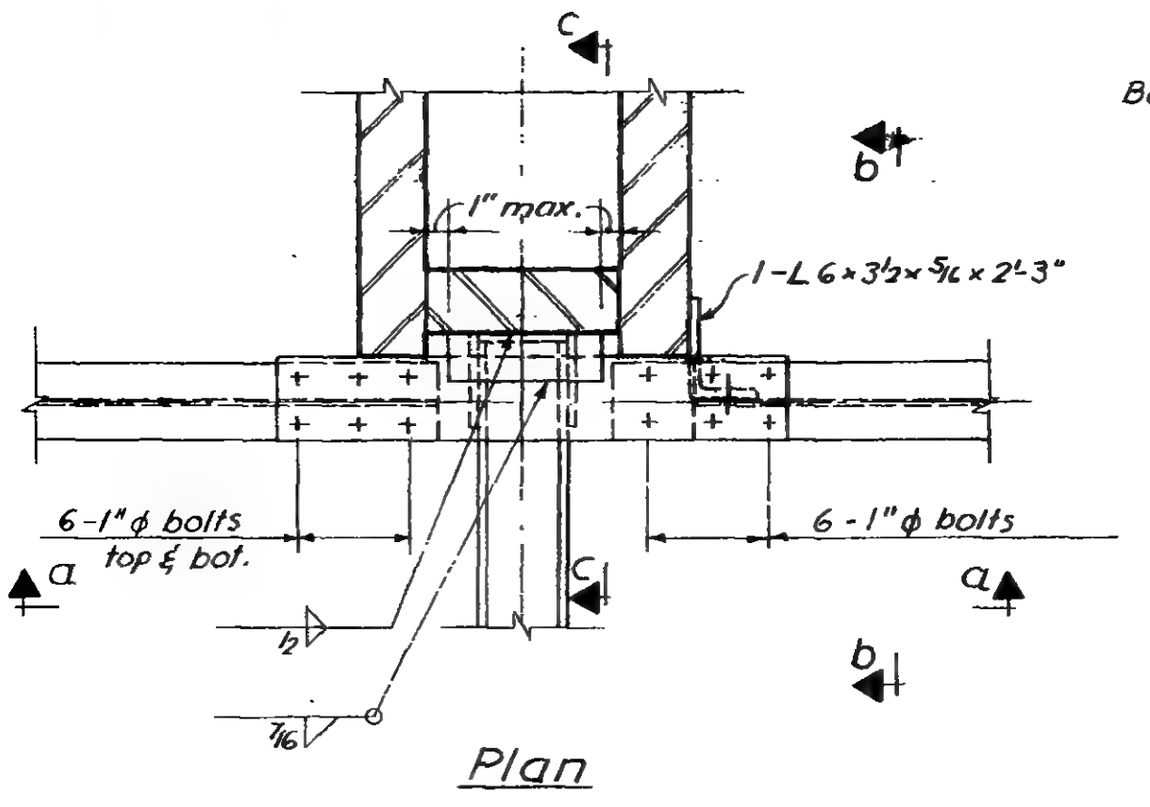

Plan

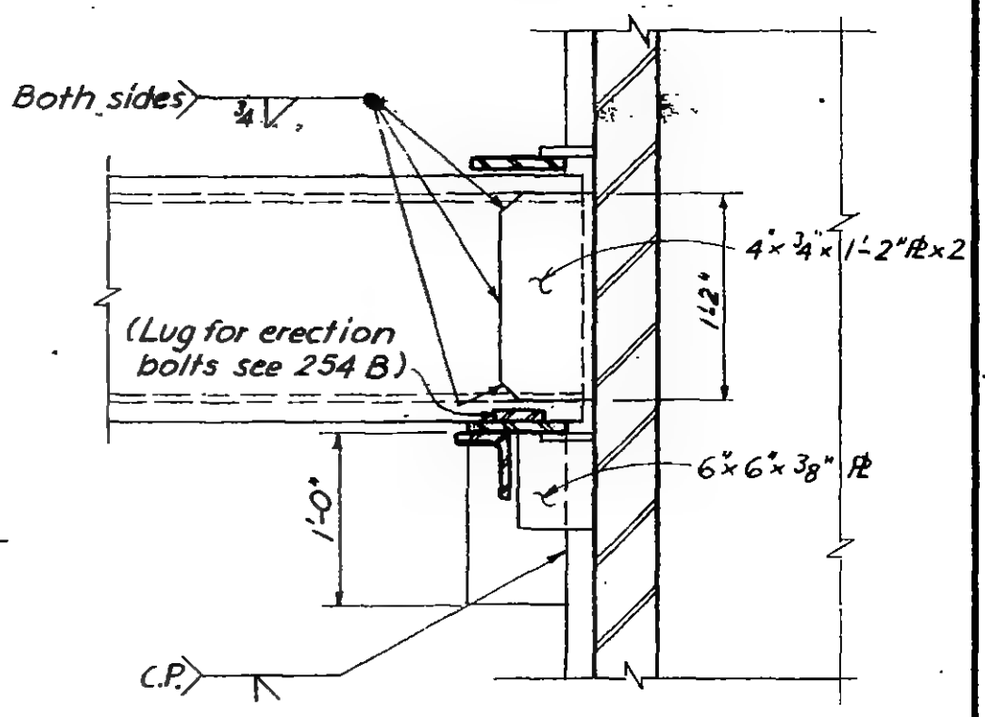

Section c-c

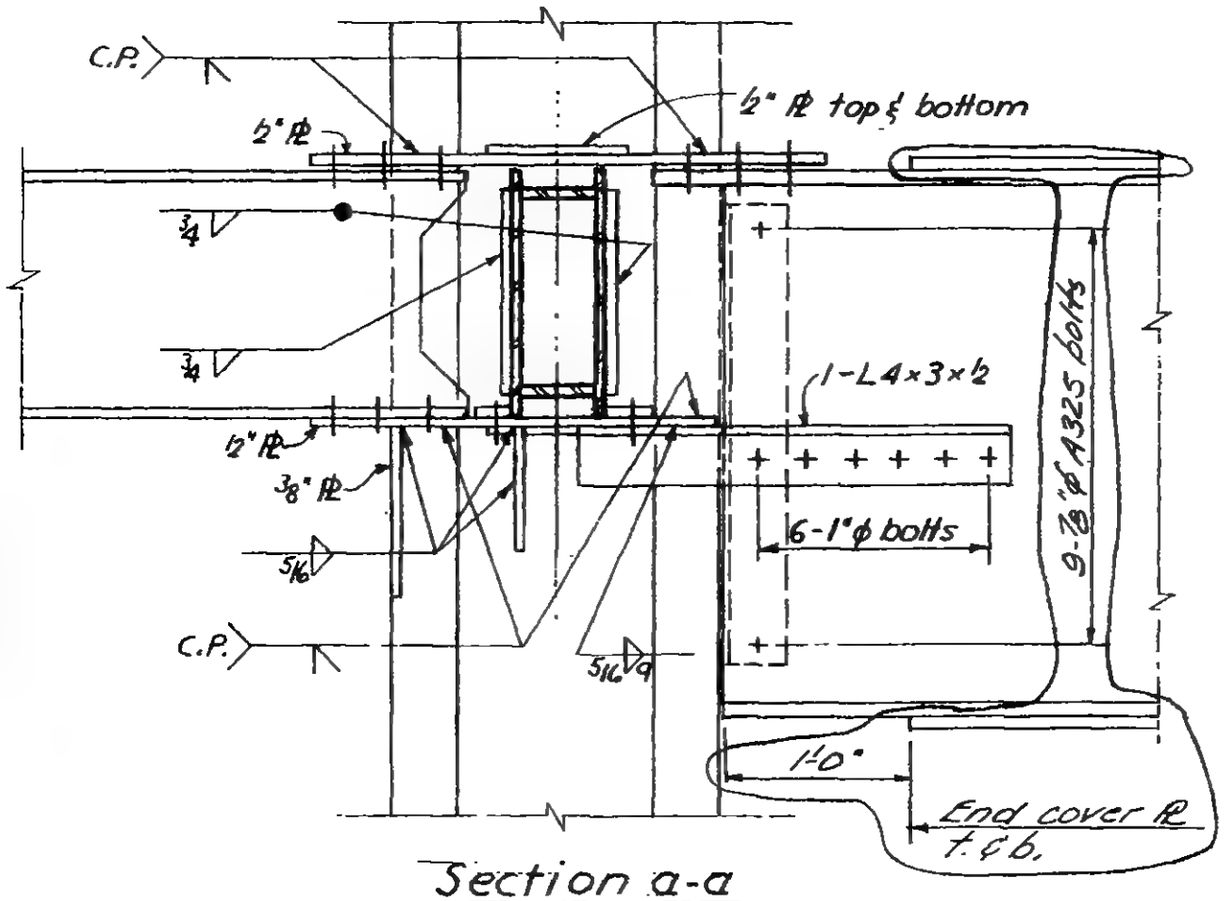

Section a-a

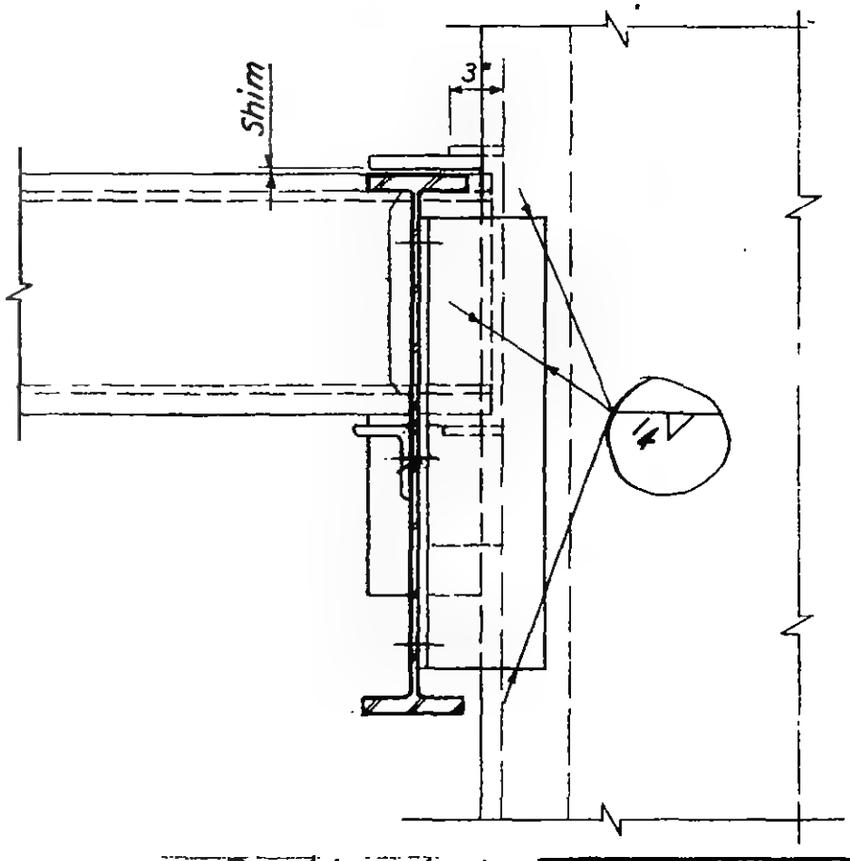

Section b-b

6-ABI-59.2

LICENSED PROFESSIONAL ENGINEER
LESLIE E. ROBERTSON
No. 34360
UNIVERSITY OF THE STATE OF NEW YORK

SKILLING - HELLE - CHRISTIANSEN - ROBERTSON Structural & Civil Engineers

PROJECT THE WORLD TRADE CENTER | TITLE CONNECTION DETAIL 254E | DATE 4-17-68

REVISIONS

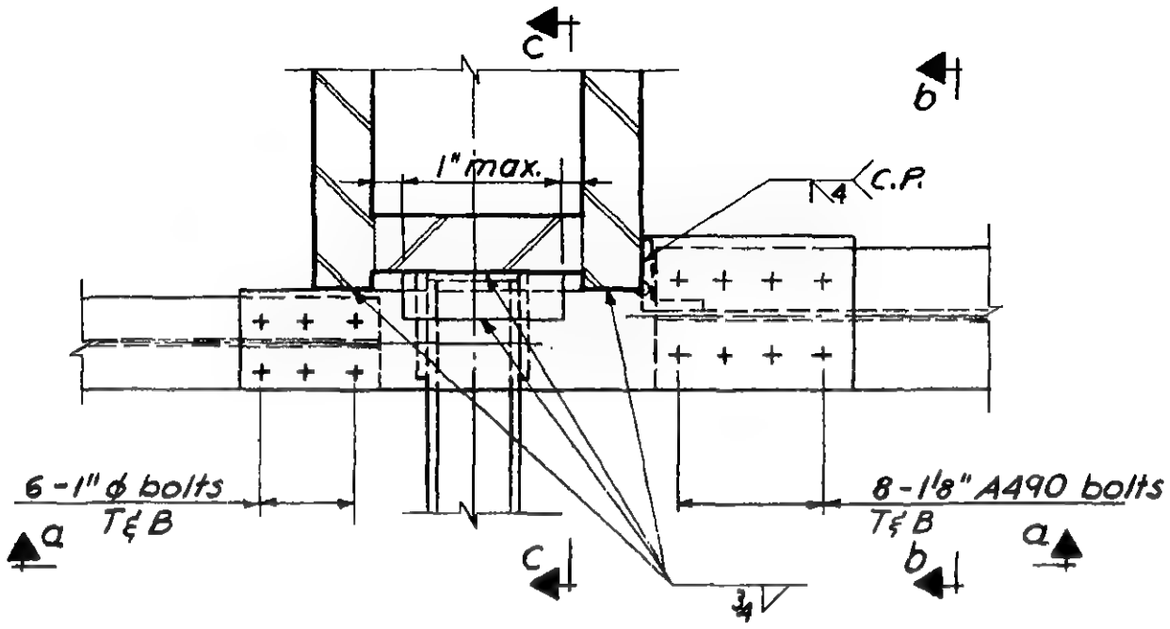

Plan

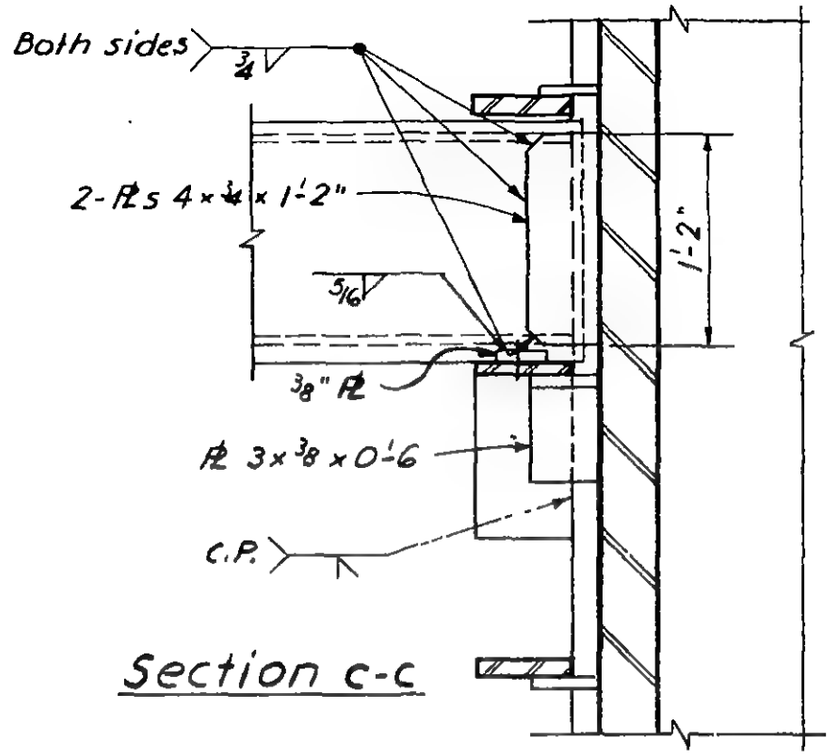

Section c-c

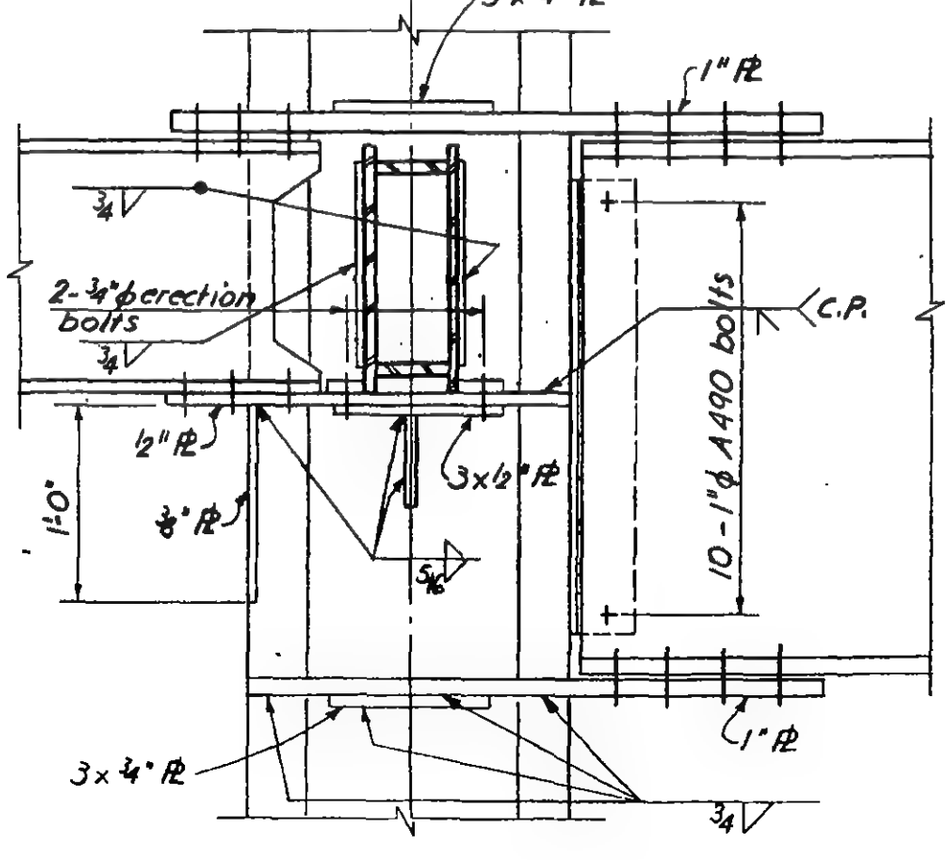

Section a-a

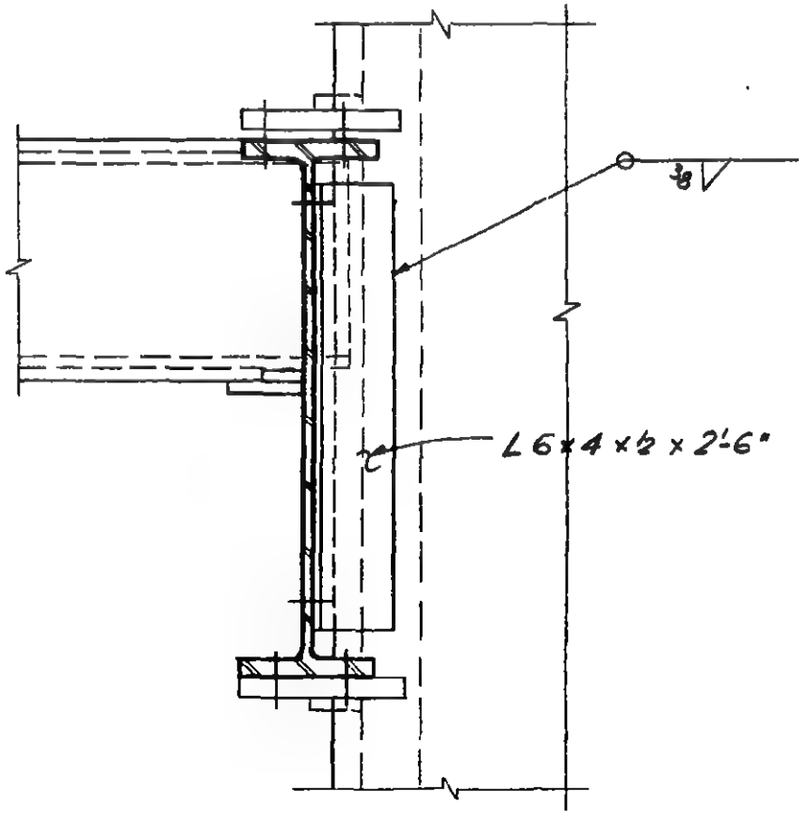

Section b-b

LICENSED PROFESSIONAL ENGINEER LESLIE E. ROBERTSON No. 34360 STATE OF NEW YORK

6-ABJ-59.3

WORTHINGTON, SKILLING, HELLE & JACKSON — Civil & Structural Engineers

PROJECT: THE WORLD TRADE CENTER | TITLE: CONNECTION DETAIL 255 A | DATE: 5-1-67

REVISIONS

-28-67

12-7-67

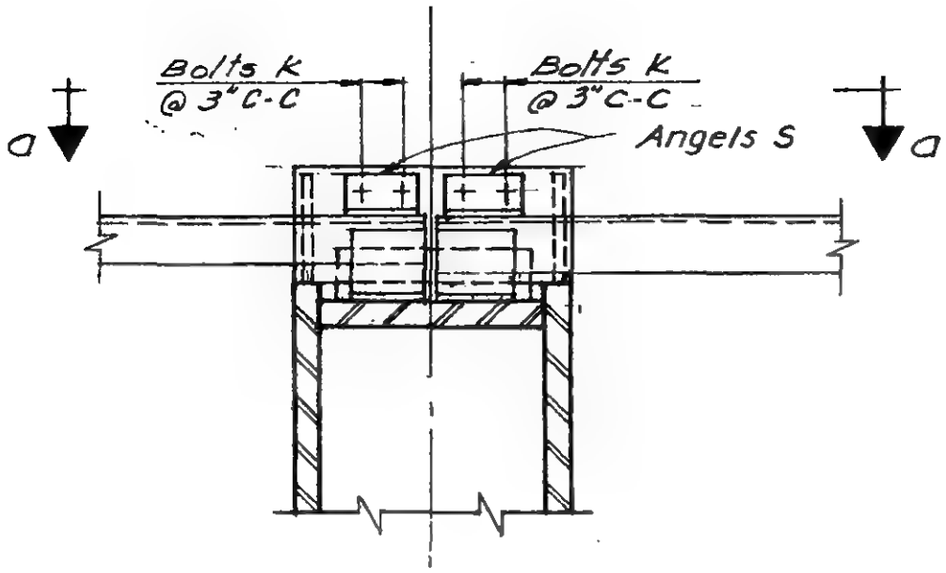

Plan

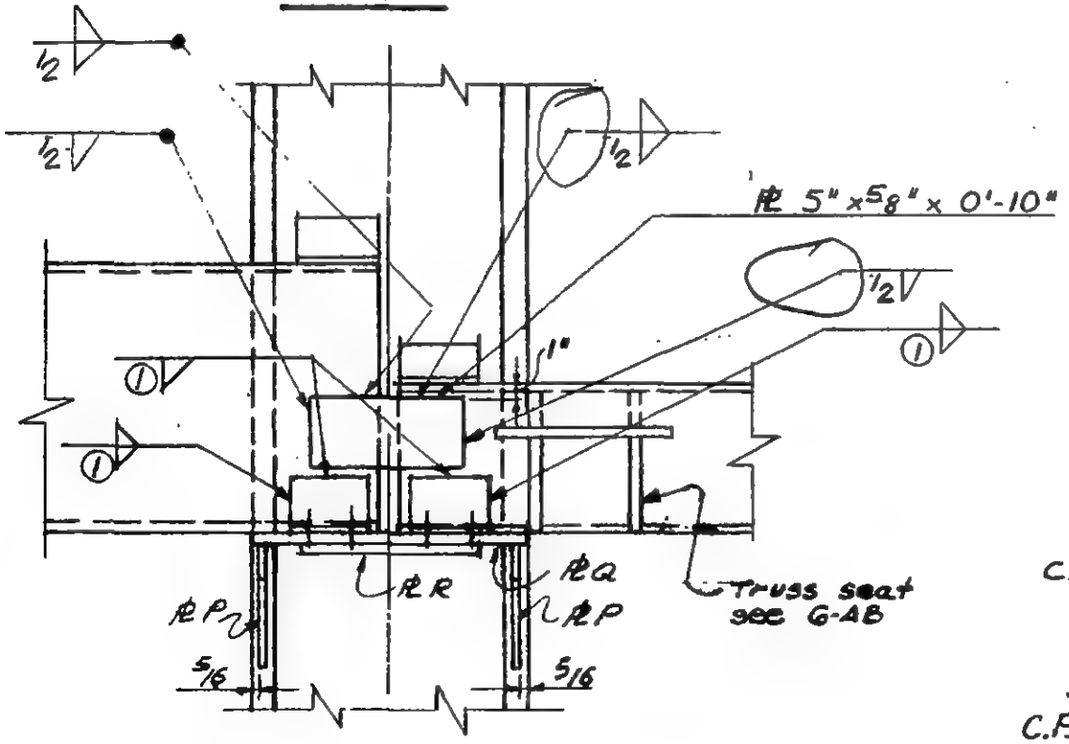

Section a-a

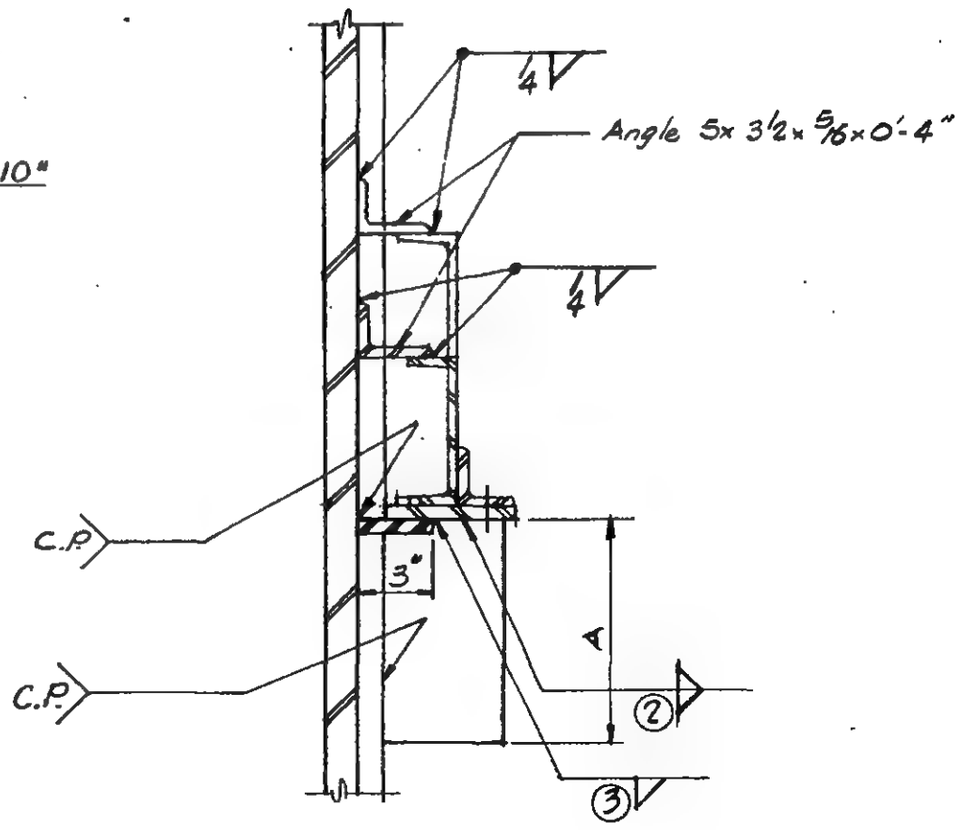

Section b-b

6-AB1-60

LICENSED PROFESSIONAL ENGINEER
LESLIE E. ROBERTSON
No. 24360
UNIVERSITY OF THE STATE OF NEW YORK

WORTHINGTON, SKILLING, HELLE & JACKSON — Civil & Structural Engineers

PROJECT THE WORLD TRADE CENTER | TITLE SCHEDULE FOR DETAIL 255 A | DATE 7-28-67 A

REVISIONS

	255A					
Plates						
℄ P	6" × ¾"					
℄ Q	8¼ × ¾					
℄ R	⅝ × 0'-7"					
Angles						
S	3 × 3 × ⅜					
Dimension						
A	1'-3"					
Bolts						
K	2 - ⅞ "ϕ					
Welds						
①	5/16					
②	¼					
③	5/16					

LICENSED PROFESSIONAL ENGINEER LESLIE E. ROBERTSON No. 34360 REGISTERED BY THE STATE OF NEW YORK

6-AB1-60.1

SKILLING - HELLE - CHRISTIANSEN - ROBERTSON Structural & Civil Engineers

PROJECT THE WORLD TRADE CENTER | TITLE CONNECTION DETAIL 257A | DATE 6-5-67

REVISIONS

1-23-67

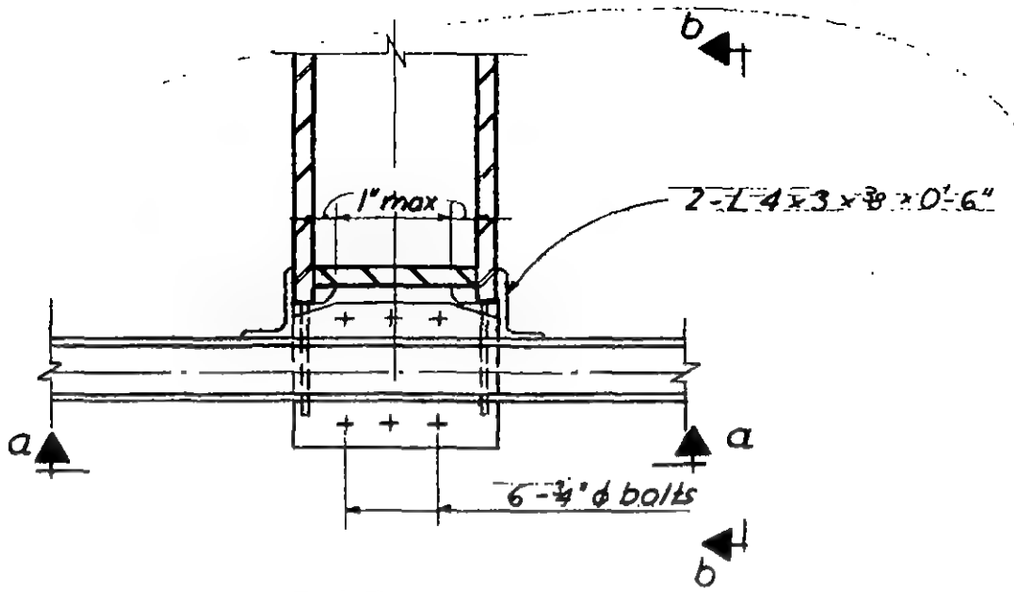

Plan

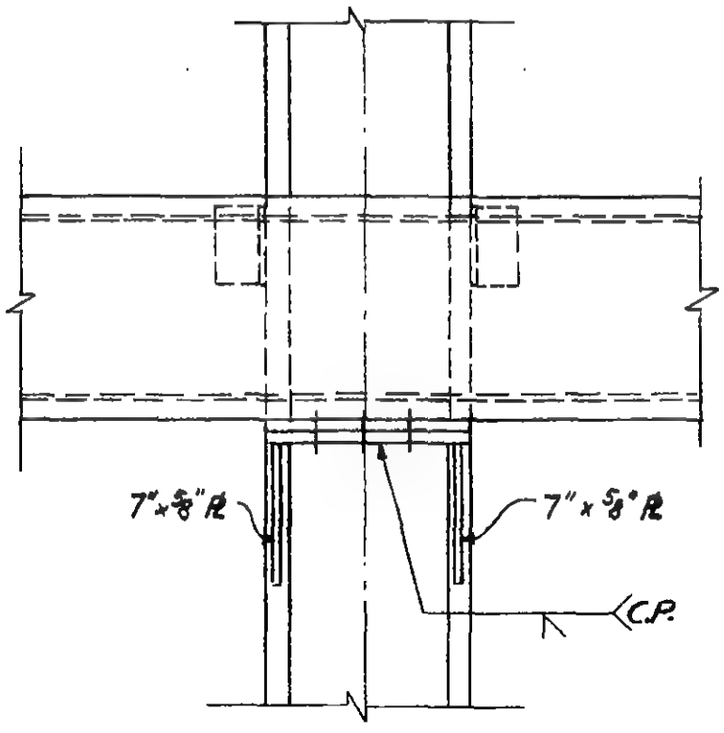

Section a-a

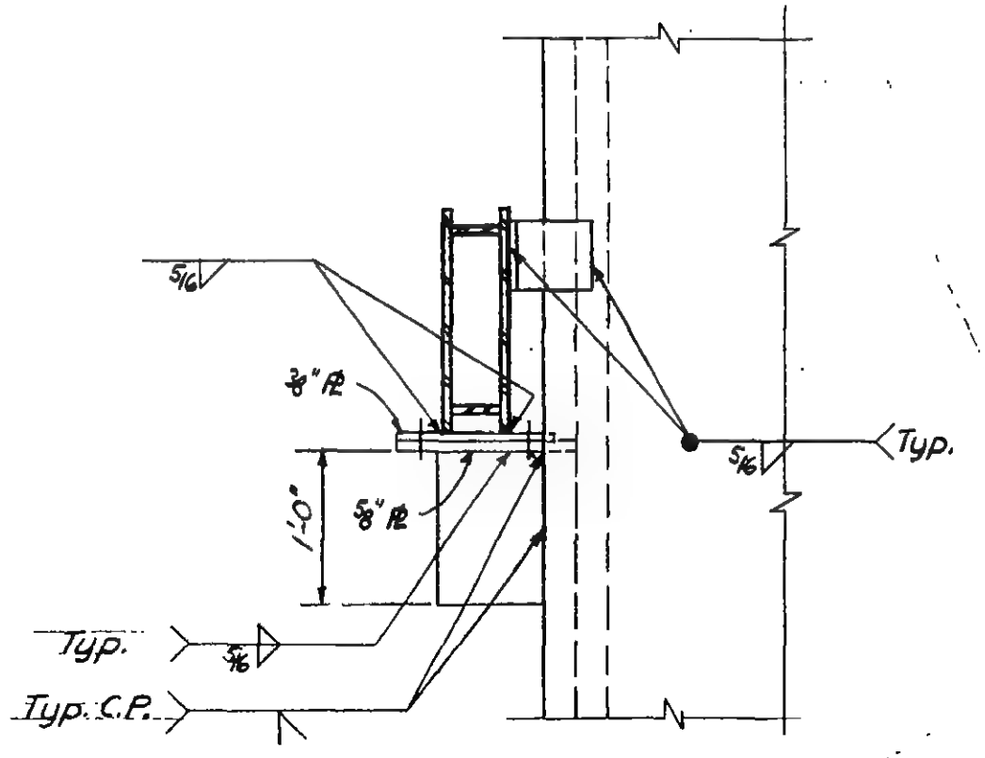

Section b-b

LICENSED PROFESSIONAL ENGINEER
LESLIE E. ROBERTSON
No. 34360
UNIVERSITY OF THE STATE OF NEW YORK

6-AB1-62

SKILLING - HELLE - CHRISTIANSEN - ROBERTSON Structural & Civil Engineers

PROJECT THE WORLD TRADE CENTER | TITLE CONNECTION DETAIL 257B | DATE 11-23-67

REVISIONS

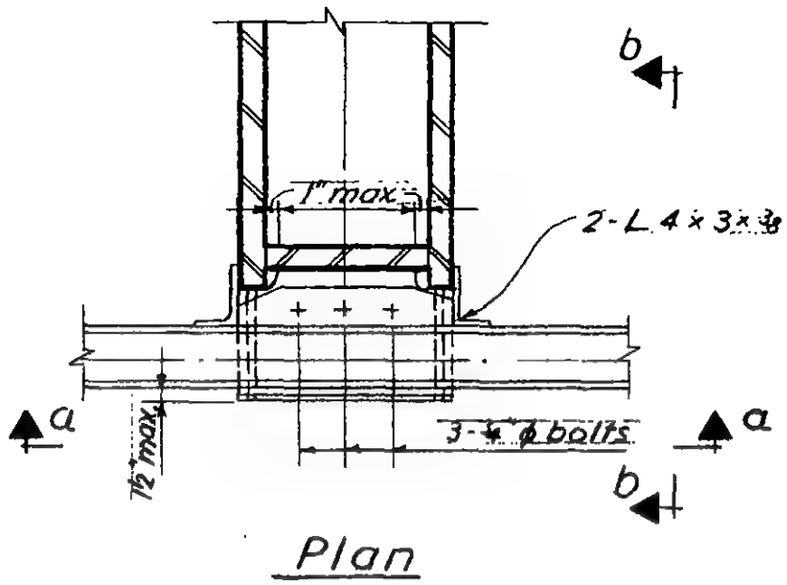

Plan

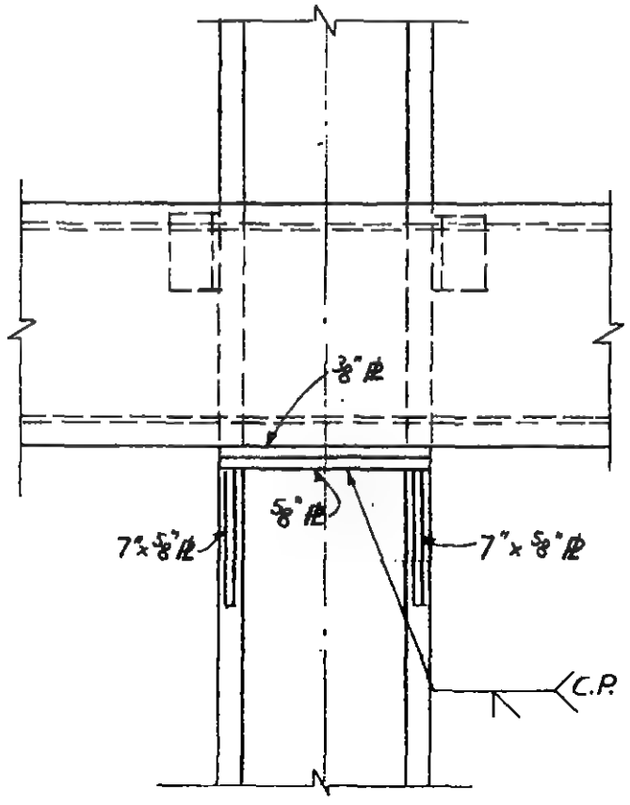

Section a-a

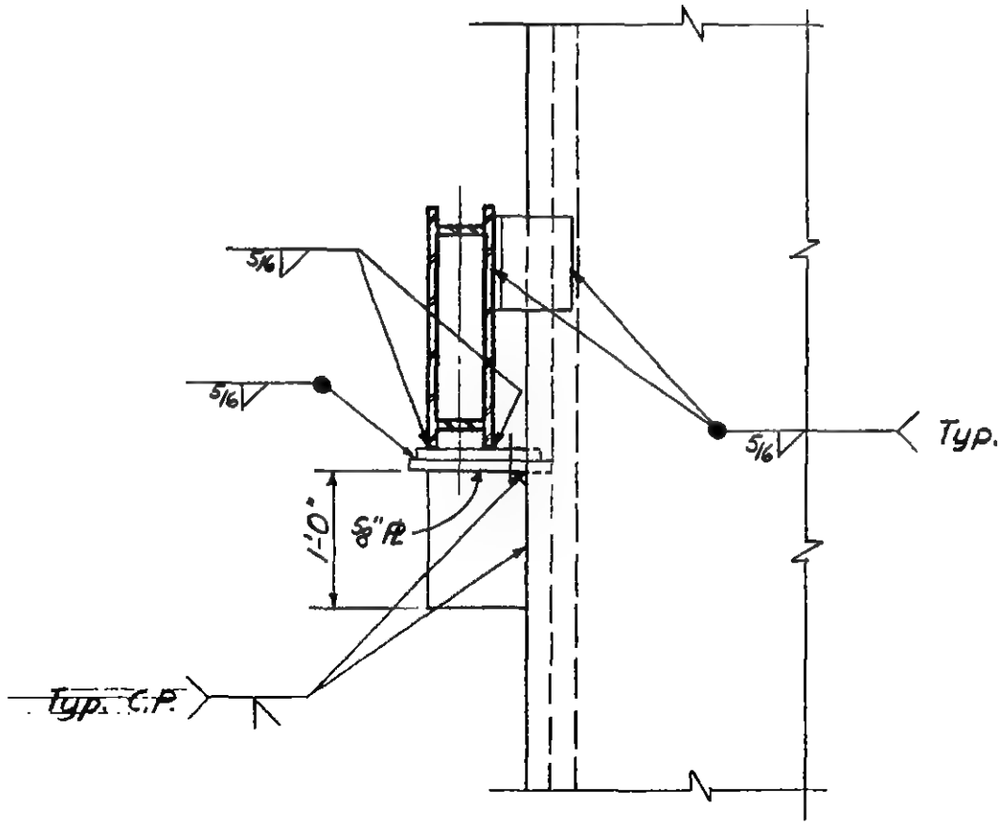

Section b-b

LICENSED PROFESSIONAL ENGINEER
LESLIE E. ROBERTSON
No. 34360
UNIVERSITY OF THE STATE OF NEW YORK

6-AB1-62.1

SKILLING - HELLE - CHRISTIANSEN - ROBERTSON Structural & Civil Engineers

PROJECT THE WORLD TRADE CENTER | TITLE CONNECTION DETAIL 258 A, B | DATE 6-5-67

REVISIONS

1-23-67

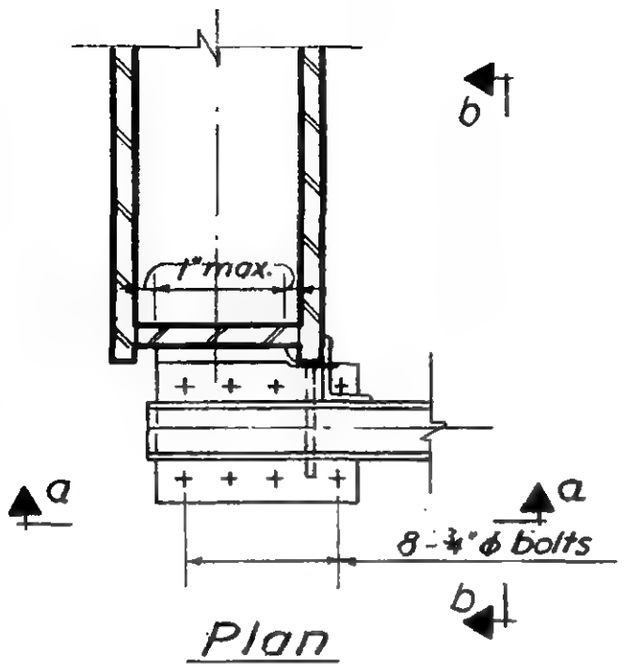

Plan

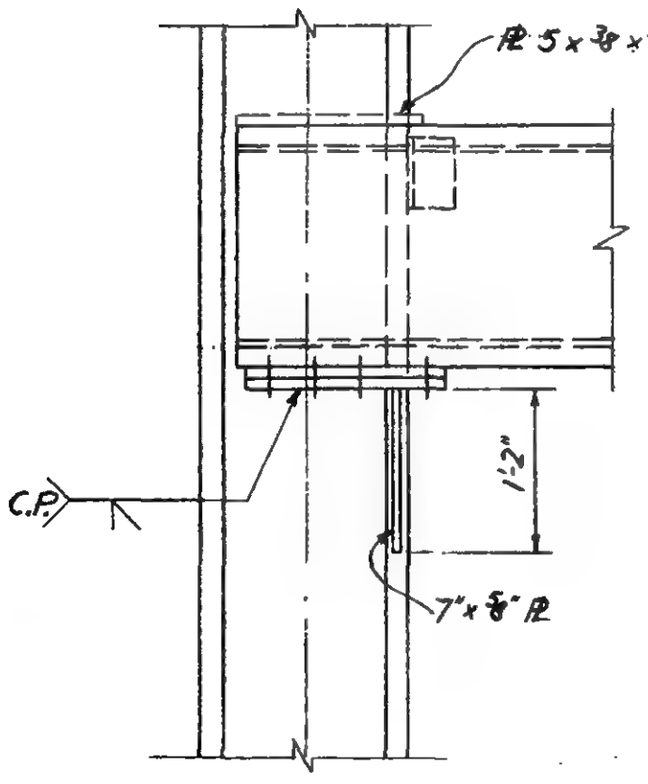

Section a-a

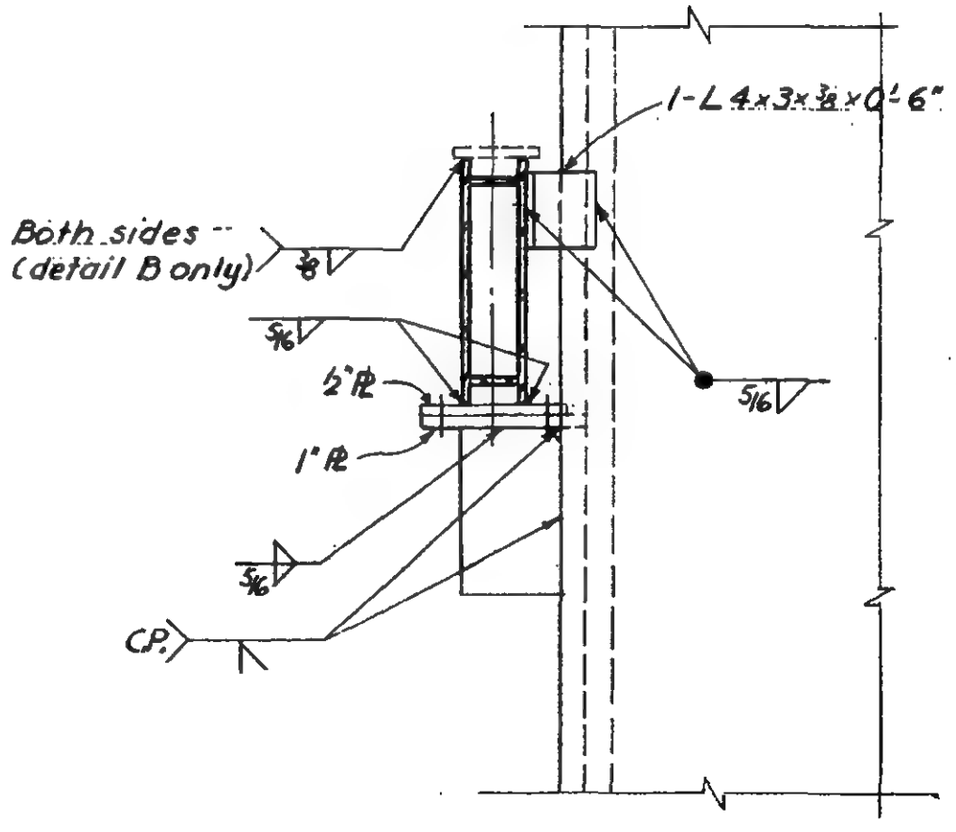

Section b-b

LICENSED PROFESSIONAL ENGINEER
LESLIE E. ROBERTSON
No. 34360
UNIVERSITY OF THE STATE OF NEW YORK

6-AB1-63

SKILLING - HELLE - CHRISTIANSEN - ROBERTSON Structural & Civil Engineers

PROJECT THE WORLD TRADE CENTER | TITLE CONNECTION DETAIL 2594 | DATE 6-5-63

REVISIONS

11-23-67

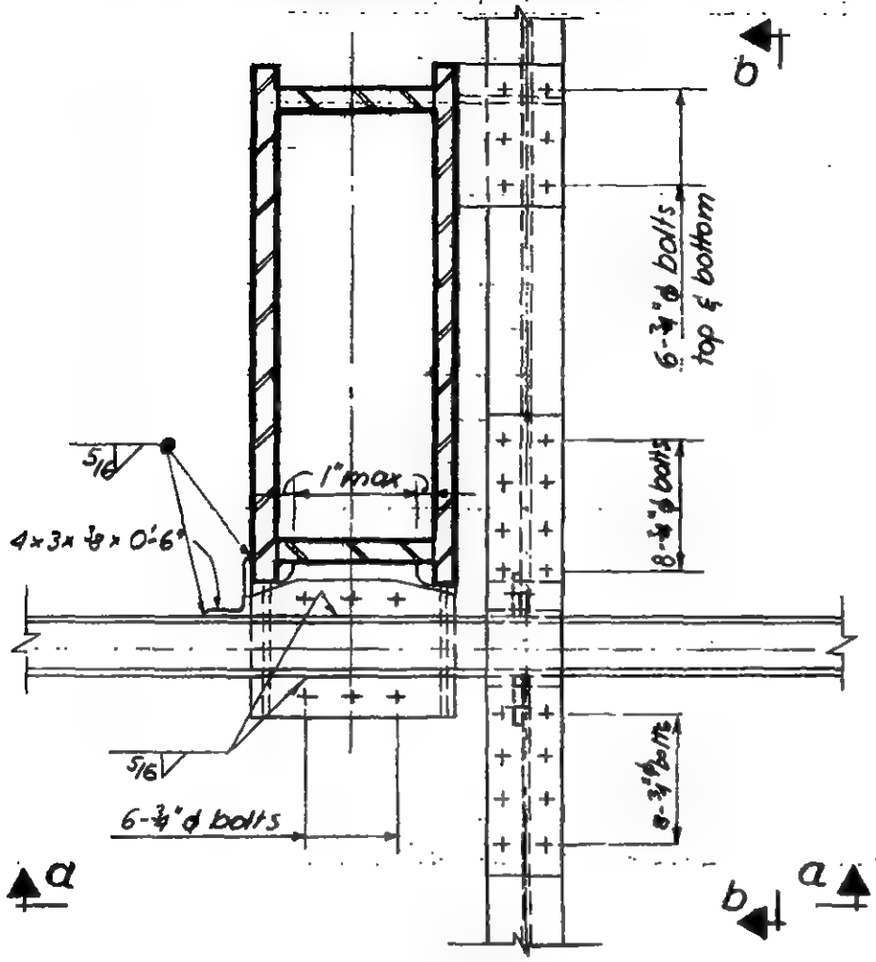

Plan

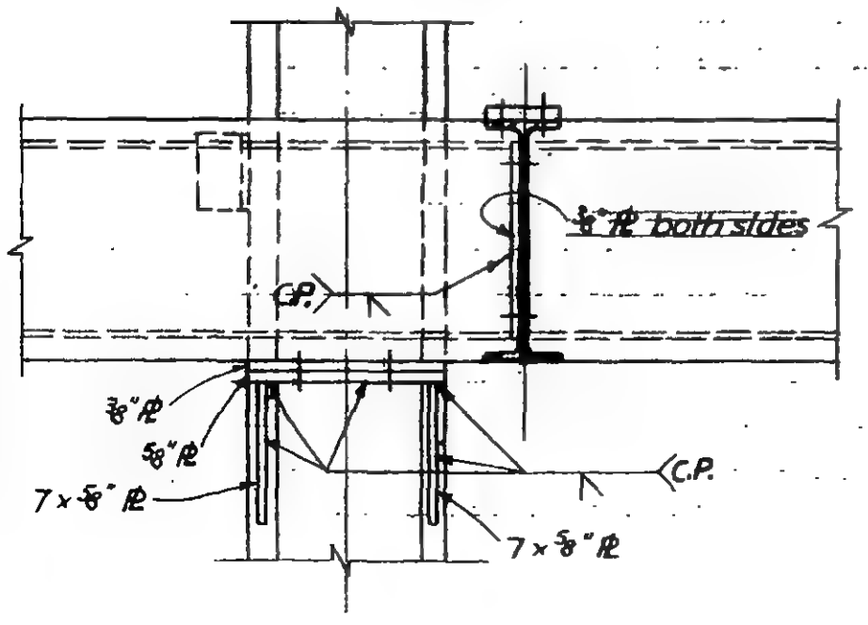

Section a-a

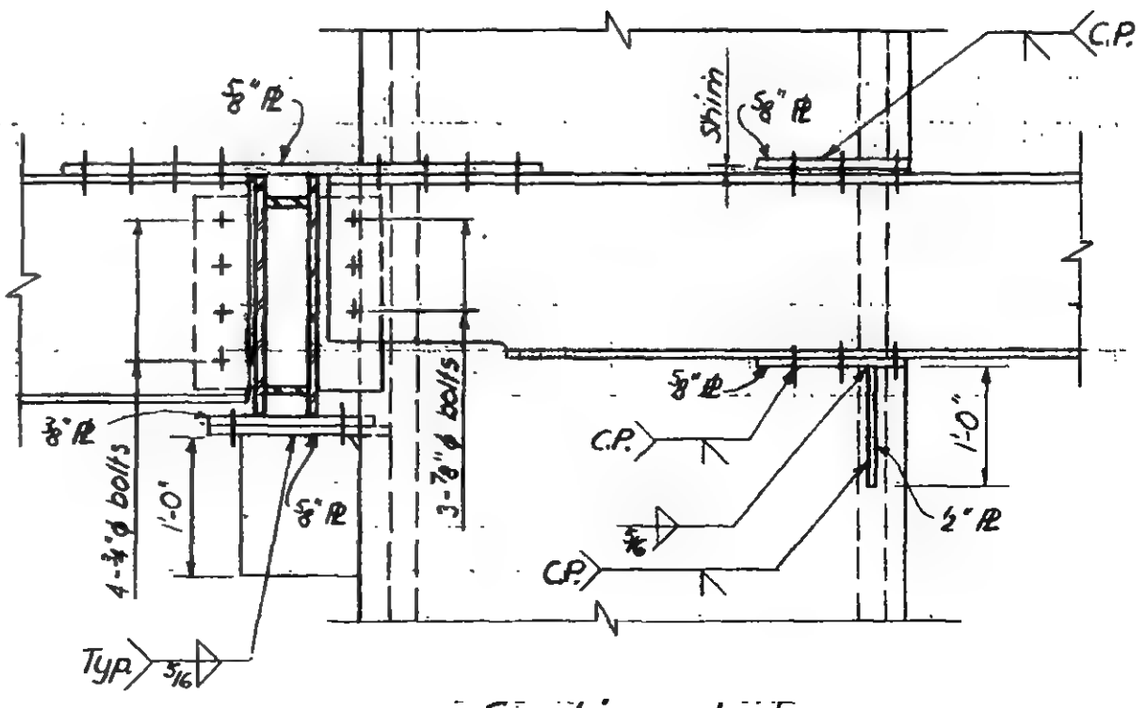

Section b-b

LICENSED PROFESSIONAL ENGINEER LESLIE E. ROBERTSON No. 24360 STATE OF NEW YORK UNIVERSITY

6-AB1-64

WORTHINGTON, SKILLING, HELLE & JACKSON — Civil & Structural Engineers

PROJECT: THE WORLD TRADE CENTER | TITLE: CONNECTION DETAIL — 260 A, B & D | DATE: 6-5-67

REVISIONS
7-5-67
7-28-67
10-2-67

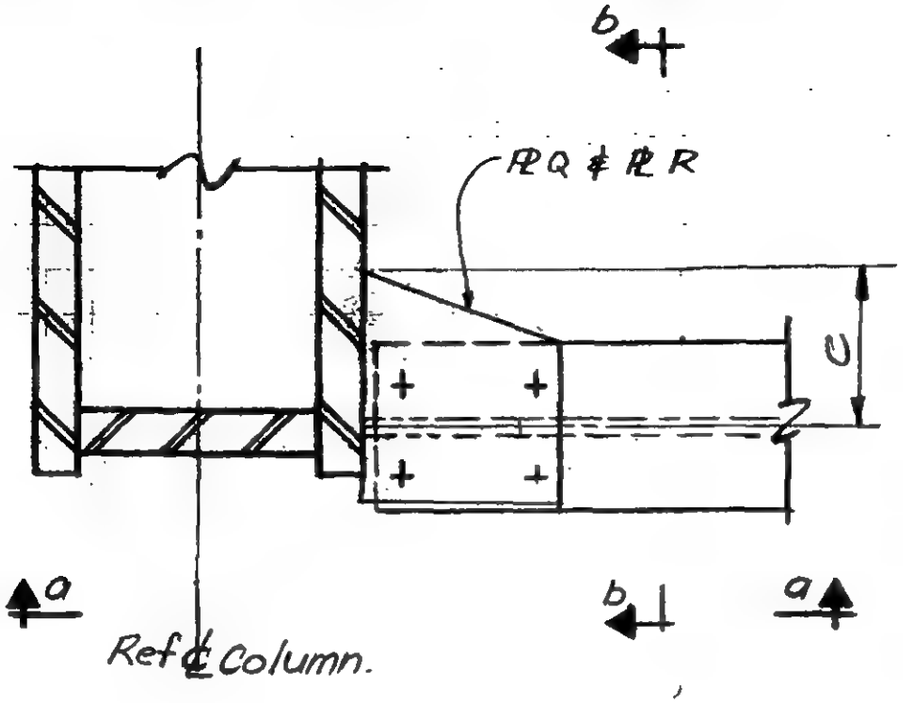

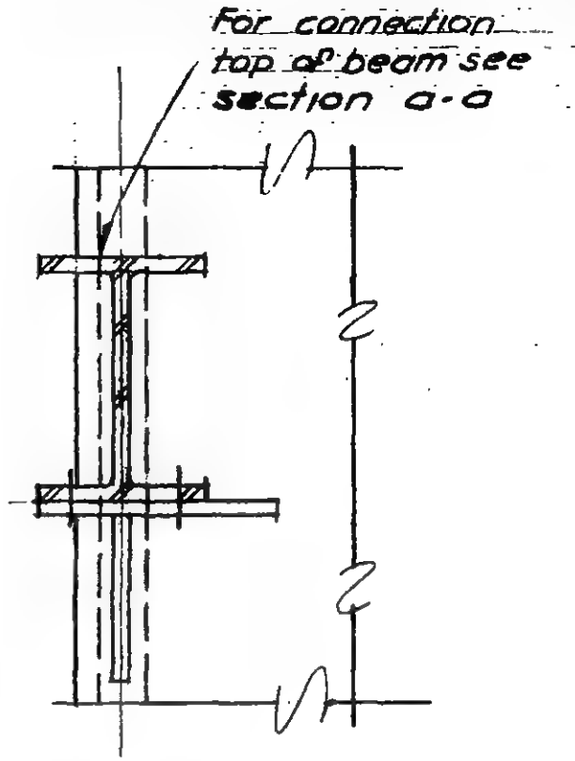

Section b-b

Plan.

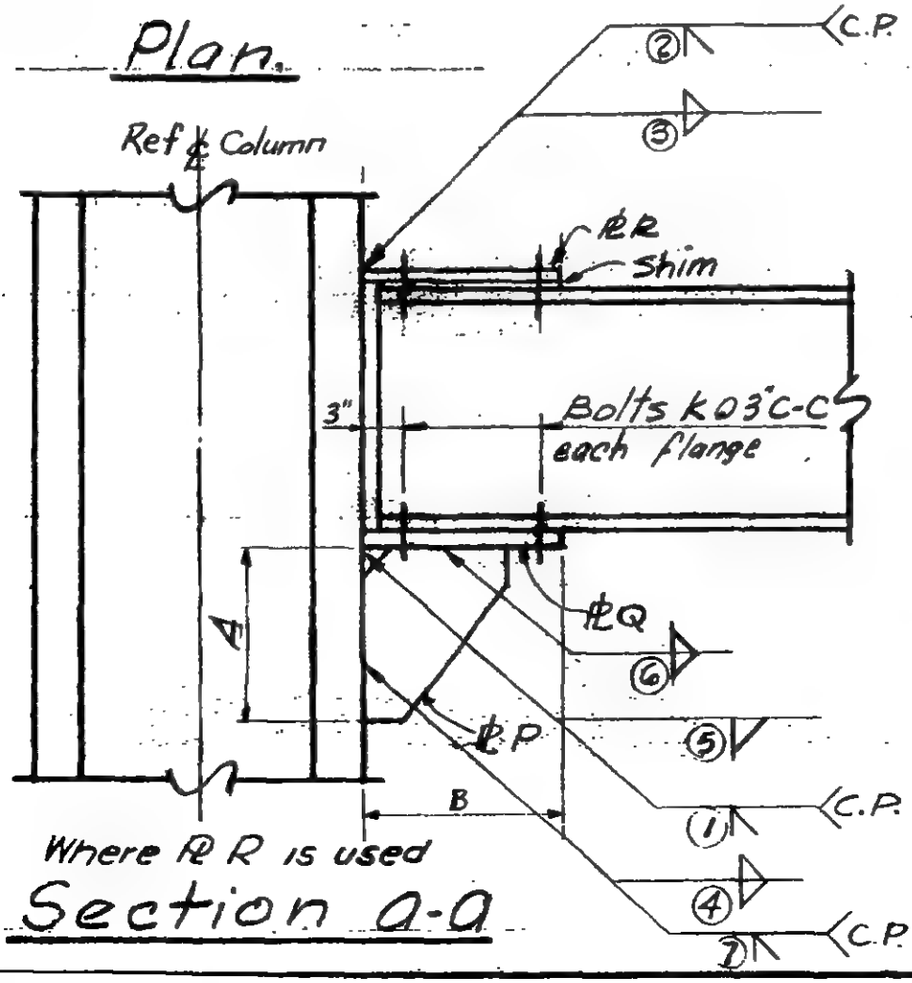

Where ℄R is used

Section a-a

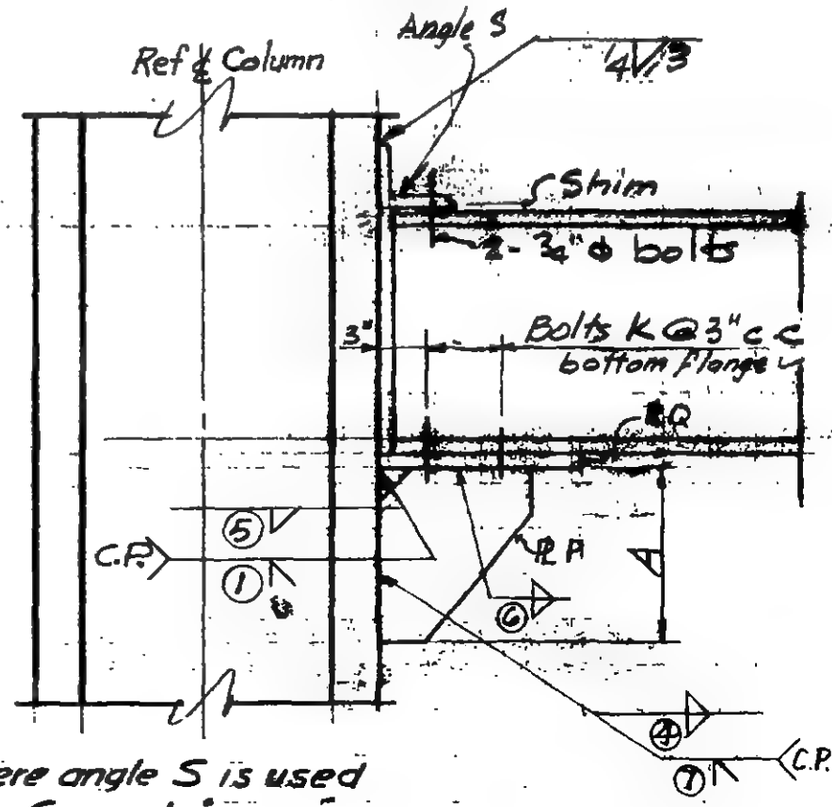

Where angle S is used

Section a-a

6 - AB1 - 65

LICENSED PROFESSIONAL ENGINEER — LESLIE E. ROBERTSON — No. 34360 — STATE OF NEW YORK

SKILLING - HELLE - CHRISTIANSEN - ROBERTSON Structural & Civil Engineers

PROJECT THE WORLD TRADE CENTER | TITLE SCHEDULE FOR DETAIL 260 A, B, D | DATE 7-5-67

REVISIONS
1-28-67
10-2-67

	260A	260B		260D		
PLATES						
P	5" x 3/8"	5" x 3/8"		5" x 1/2"		
Q	3/8"	3/8"		1/2"		
R	—	—		—		
ANGLES						
S	4 x 3 x 5/16	4 x 3 x 5/16		4 x 3 x 5/16		
DIMENSIONS						
A	1'-0"	0'-9"		1'-1"		
B	—	—		—		
C	0'-4"	0'-4"		0'-5"		
BOLTS						
K	4-3/4" ϕ	4-3/4" ϕ		4-3/4" ϕ		
WELDS						
①	—	—		C.P.		
④	3/8	3/8		5/16		
⑤	3/8	3/8		—		
⑥	5/16	5/16		5/16		

LICENSED PROFESSIONAL ENGINEER LESLIE E. ROBERTSON No. 34360 UNIVERSITY OF THE STATE OF NEW YORK

6-ABI-65.1

WORTHINGTON, SKILLING, HELLE & JACKSON — Civil & Structural Engineers

PROJECT THE WORLD TRADE CENTER | TITLE CONNECTION DETAIL 260 C | DATE 6-30-67

REVISIONS

7-28-67

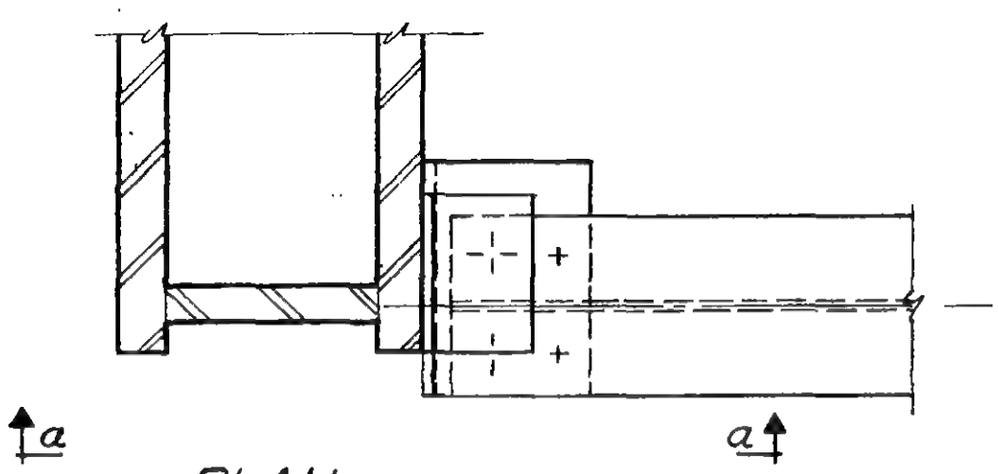

PLAN

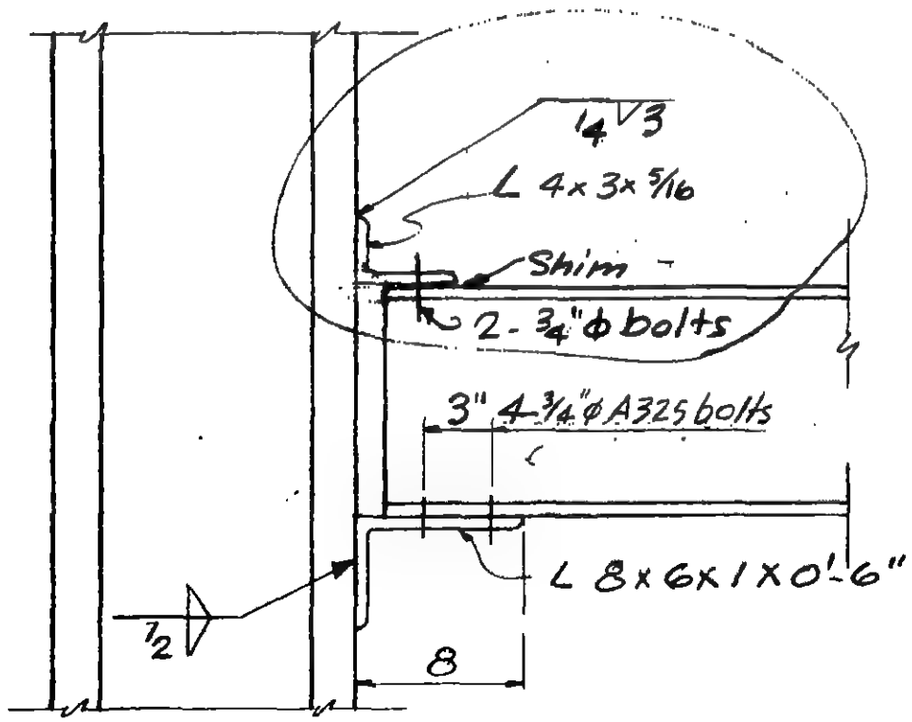

SECTION a-a

LICENSED PROFESSIONAL ENGINEER
LESLIE E. ROBERTSON
No. 34360
CITY OF THE STATE OF NEW YORK

G-AB1-65.3

SKILLING - HELLE - CHRISTIANSEN - ROBERTSON Structural & Civil Engineers

PROJECT THE WORLD TRADE CENTER | TITLE CONNECTION DETAIL 260E | DATE 4-17-68.

REVISIONS

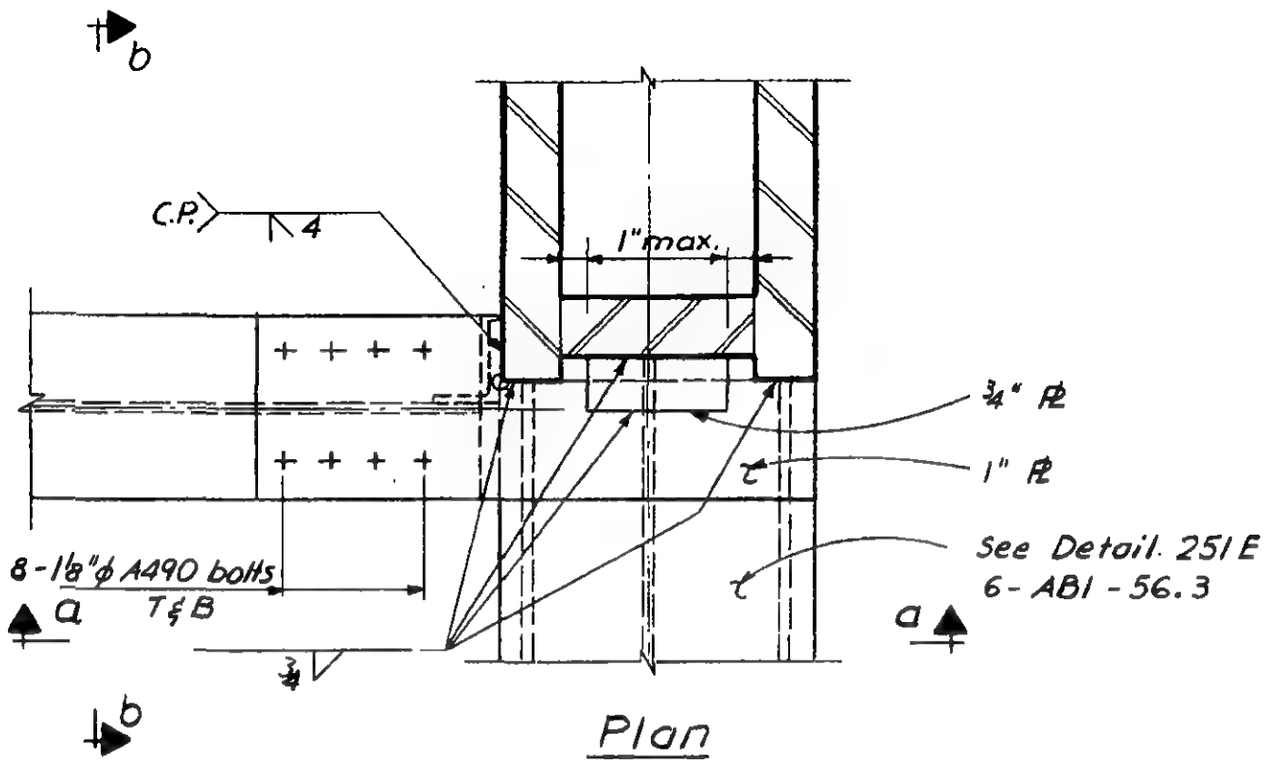

Plan

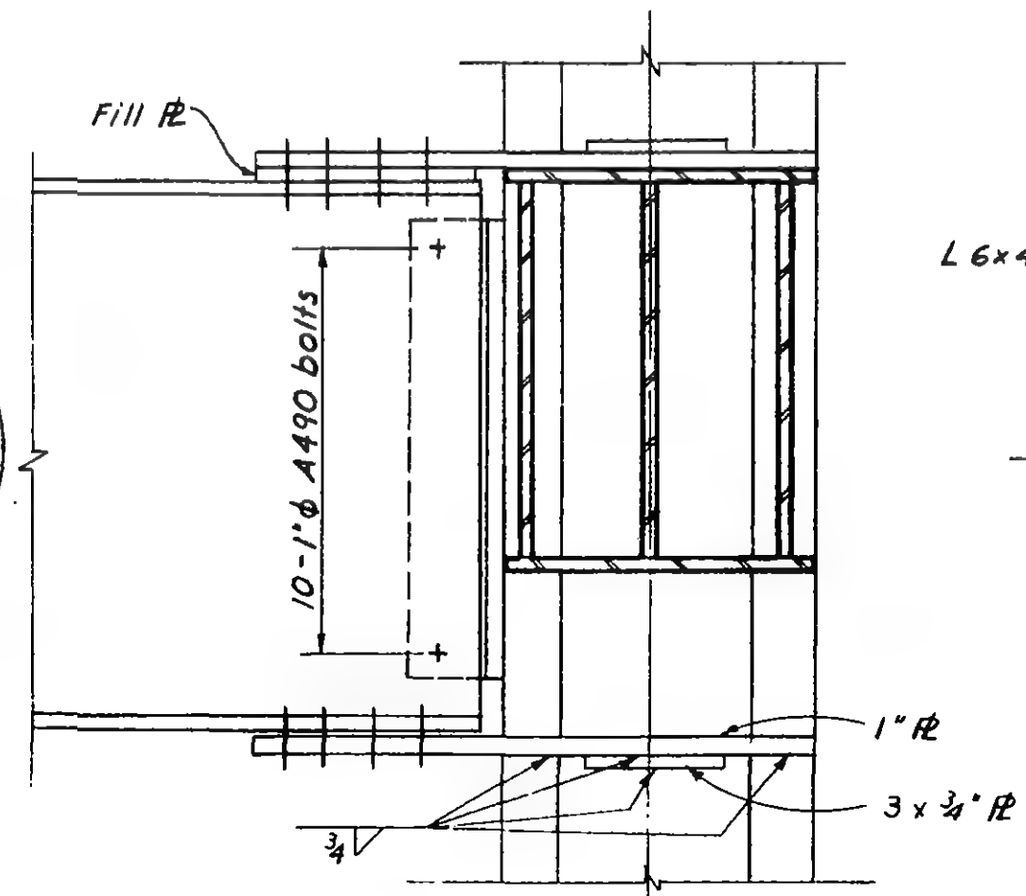

Section a-a

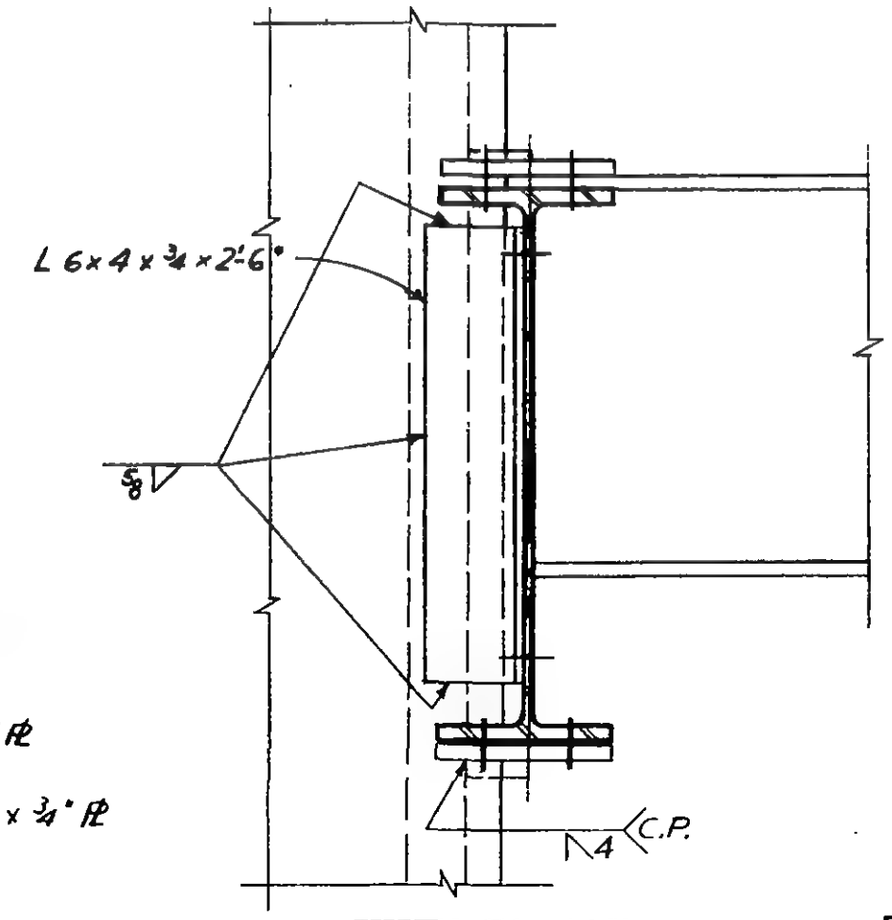

Section b-b

LICENSED PROFESSIONAL ENGINEER
LESLIE E. ROBERTSON
No. 34360
UNIVERSITY OF THE STATE OF NEW YORK

6-AB1-65.4

WORTHINGTON, SKILLING, HELLE & JACKSON — Civil & Structural Engineers

PROJECT: THE WORLD TRADE CENTER | TITLE: CONNECTION DETAIL 201 A | DATE: 6-19-67

REVISIONS

8-5-67

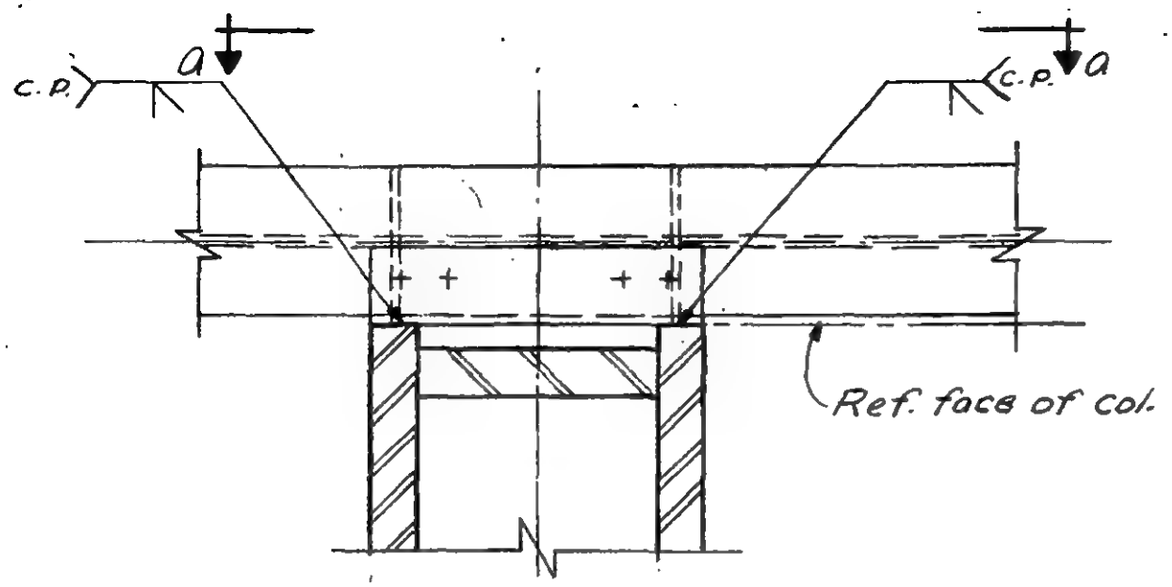

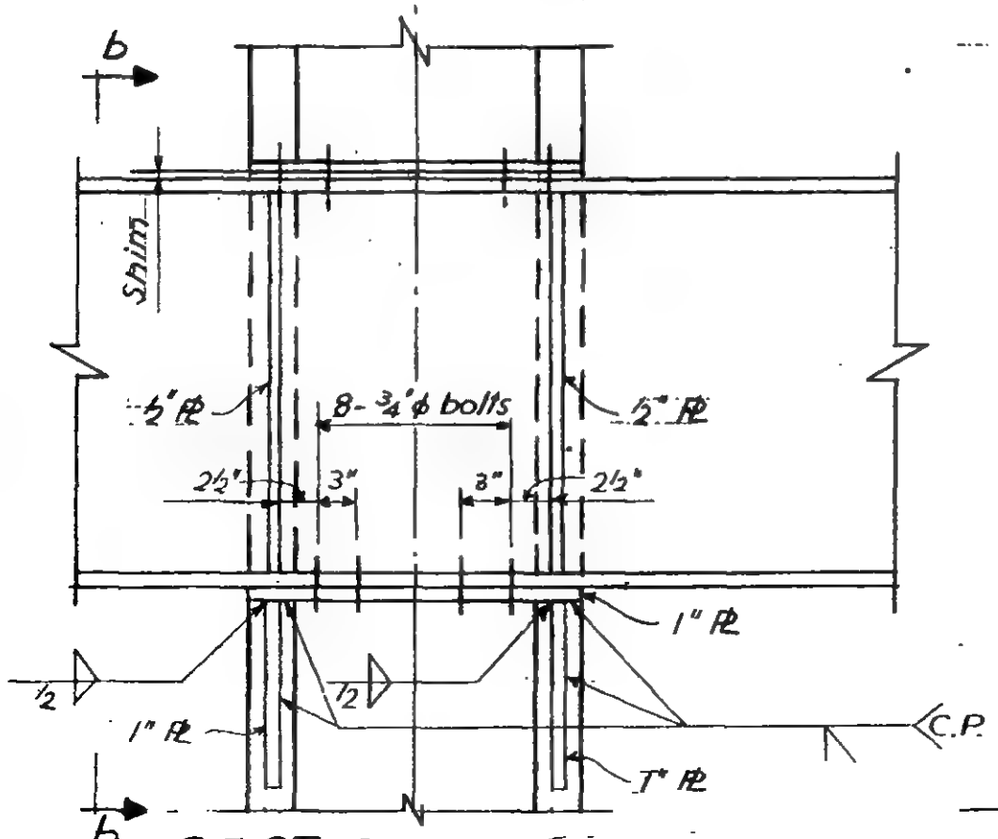

SECTION a-a

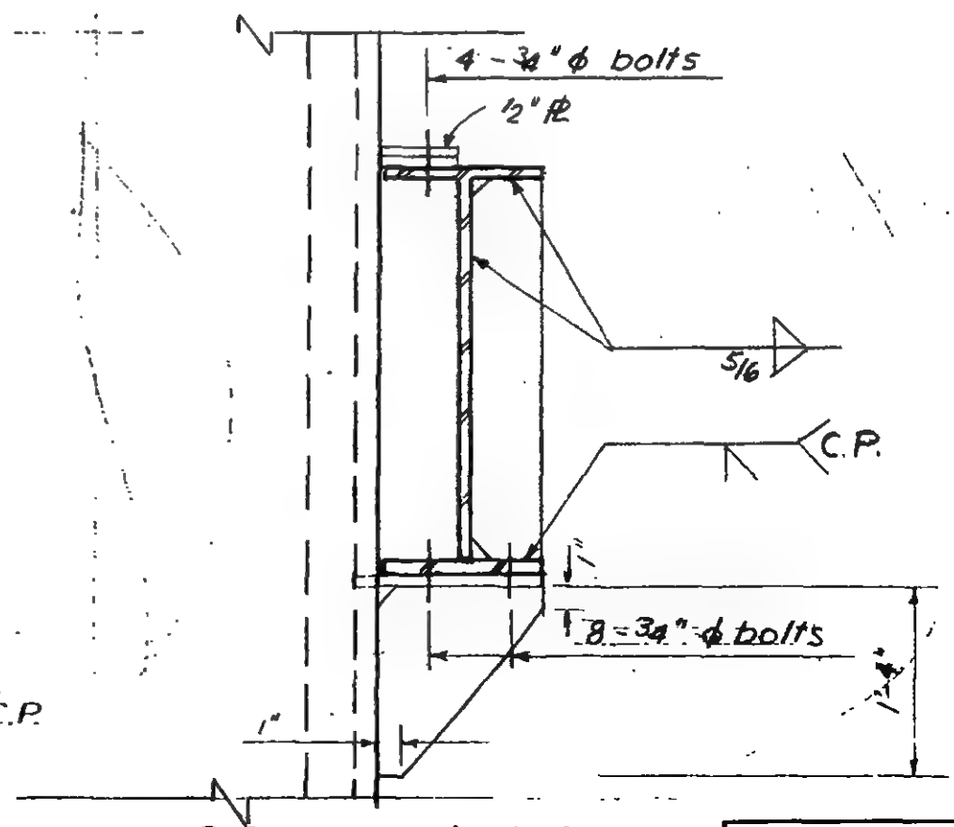

SECTION b-b

6-AB1-66

LICENSED PROFESSIONAL ENGINEER
LESLIE E. ROBERTSON
No. 34360
UNIVERSITY OF THE STATE OF NEW YORK

WORTHINGTON, SKILLING, HELLE & JACKSON — Civil & Structural Engineers

PROJECT	TITLE	DATE
THE WORLD TRADE CENTER	CONNECTION DETAIL 262 A	7/20/61

REVISIONS

10-5-67
10-31-67

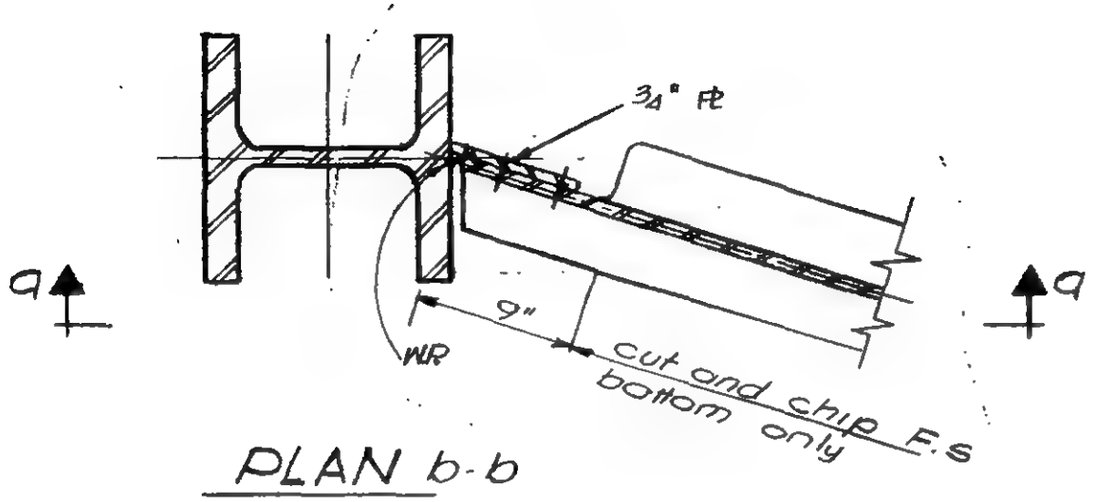

PLAN b-b

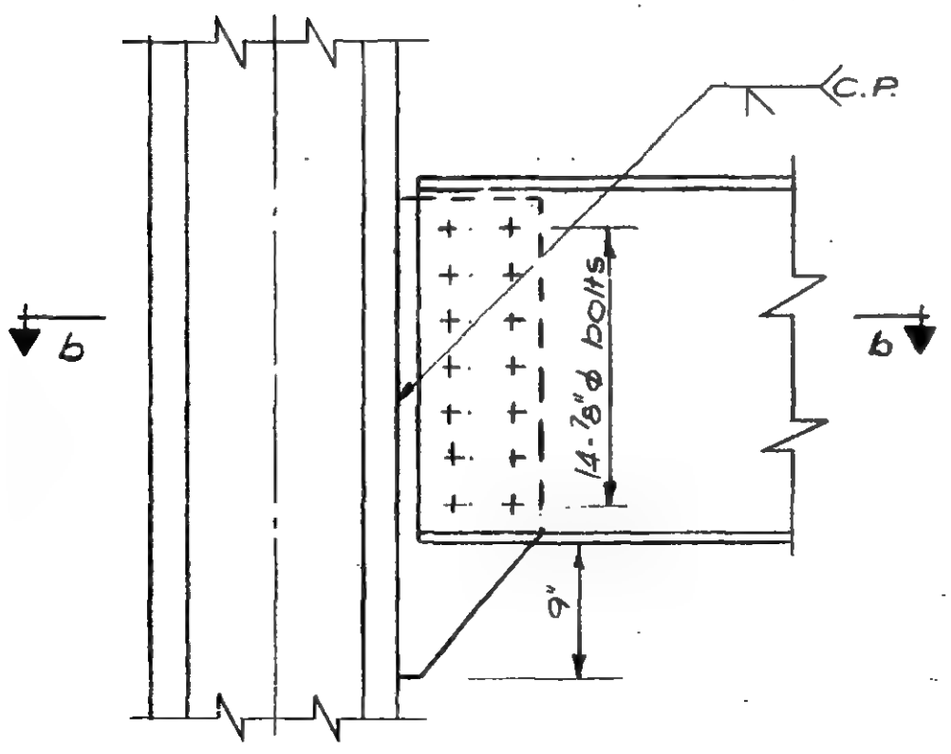

Section a-a

LESLIE E. ROBERTSON
No. 34960

6-AB1-67

SKILLING - HELLE - CHRISTIANSEN - ROBERTSON Structural & Civil Engineers

PROJECT THE WORLD TRADE CENTER | TITLE CONNECTION DETAIL 263 A | DATE 11-28-67

REVISIONS

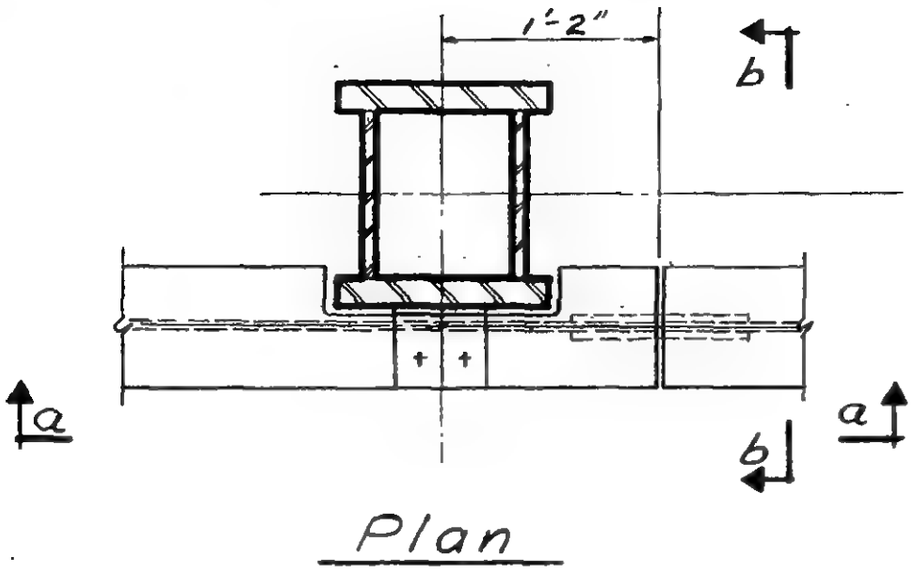

Plan

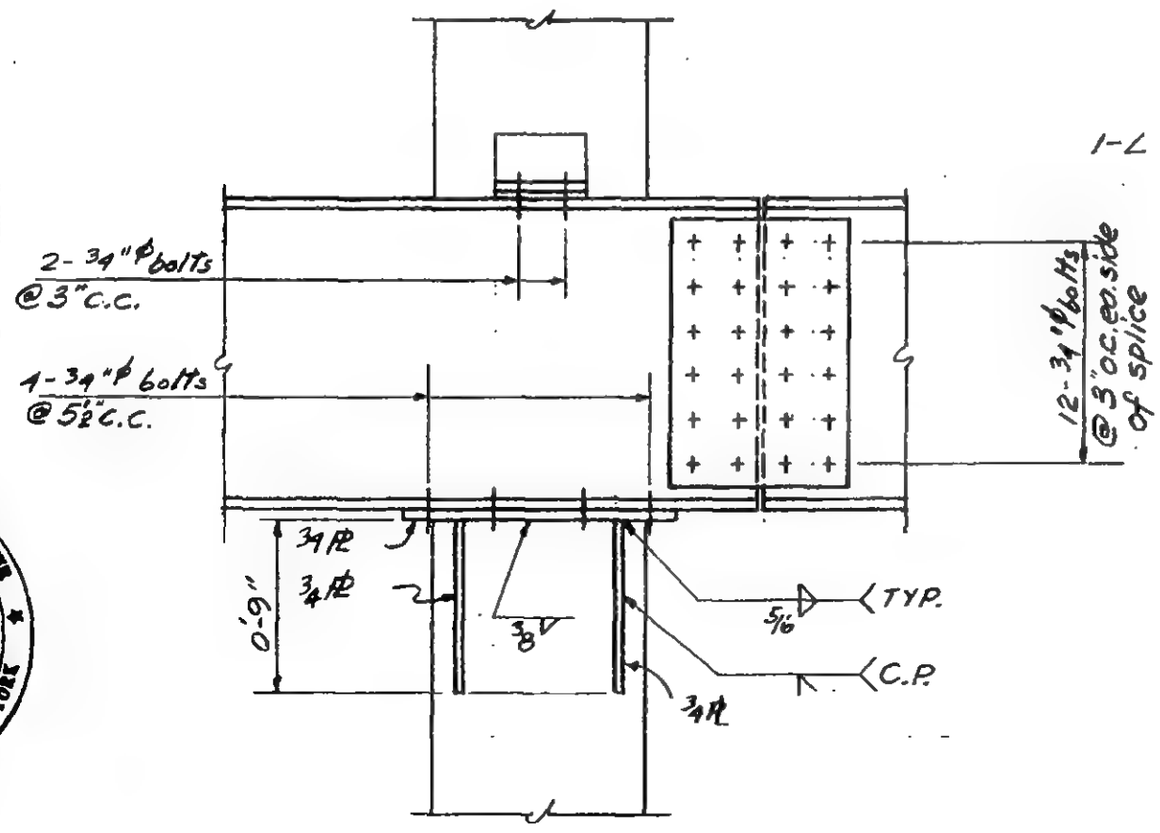

Section a-a

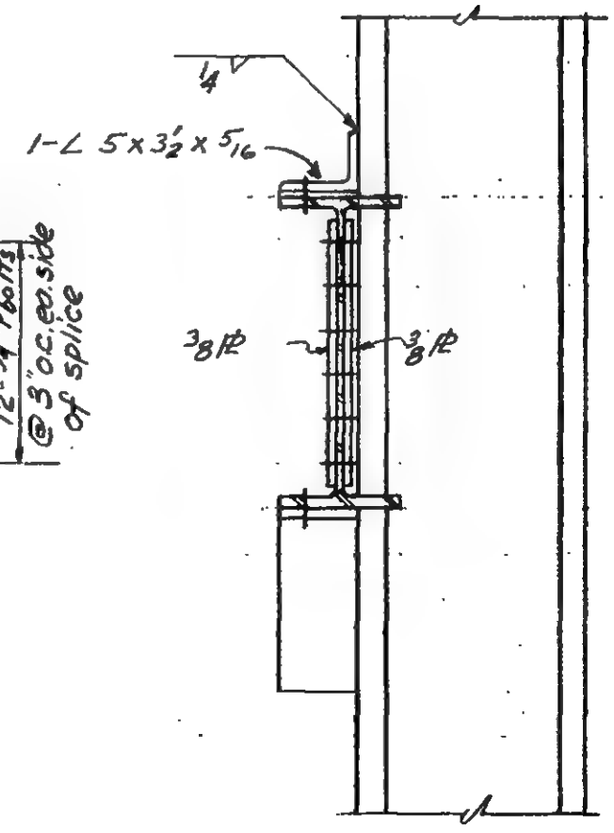

Section b-b

LICENSED PROFESSIONAL ENGINEER
LESLIE E. ROBERTSON
No. 34960
UNIVERSITY OF THE STATE OF NEW YORK

6-AB1-68

SKILLING - HELLE - CHRISTIANSEN - ROBERTSON Structural & Civil Engineers

PROJECT THE WORLD TRADE CENTER | TITLE CONNECTION DETAIL 28&29 | DATE 6-30-67

REVISIONS
10-5-67

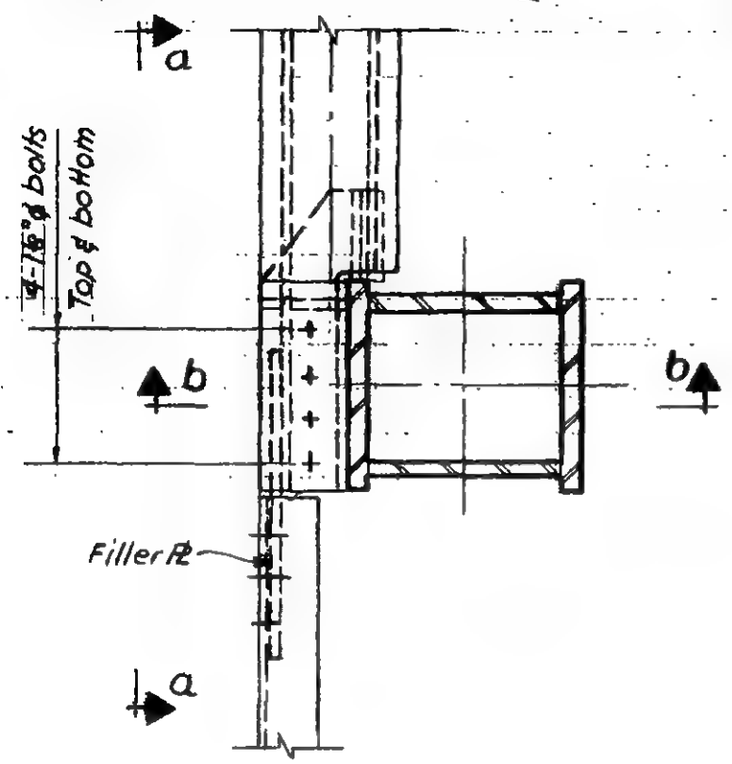

Plan

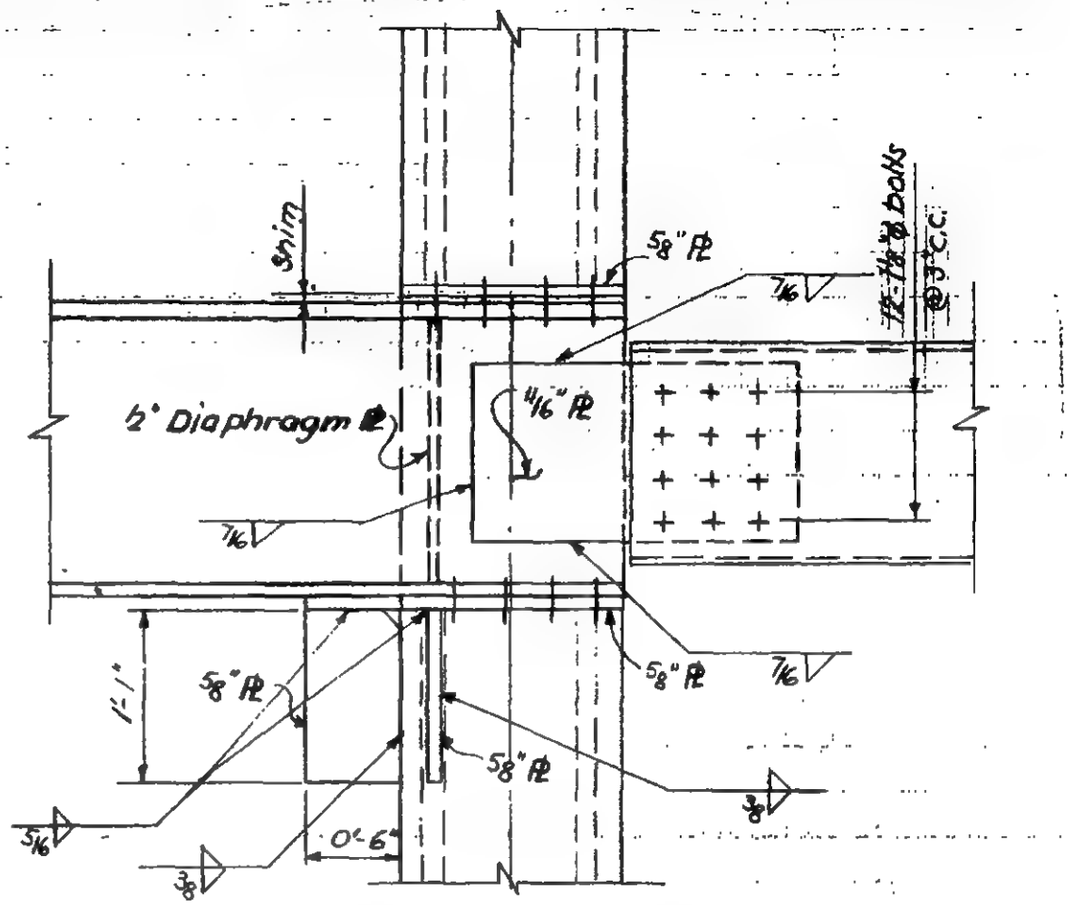

Section a-a

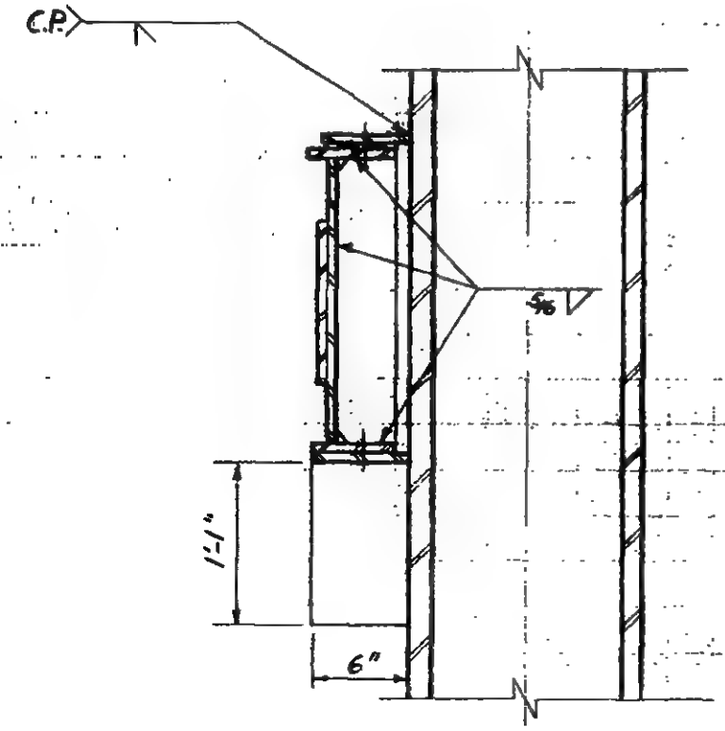

Section b-b

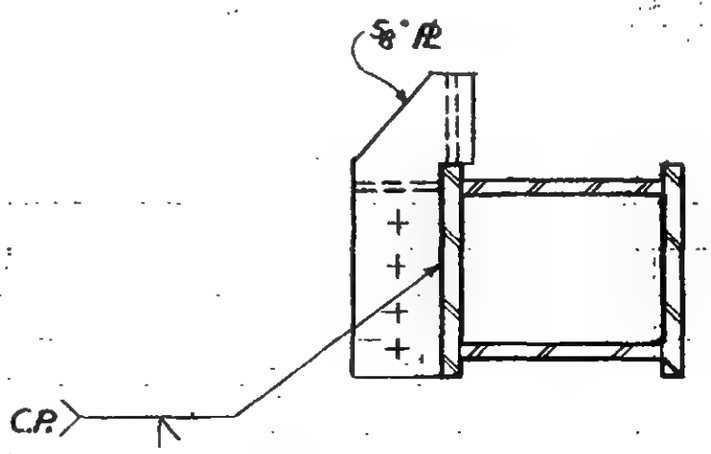

Seat Plate detail

LICENSED PROFESSIONAL ENGINEER
LESLIE E. ROBERTSON
No. 34360
UNIVERSITY OF THE STATE OF NEW YORK

6-AB1-69

WORTHINGTON, SKILLING, HELLE & JACKSON — Civil & Structural Engineers

PROJECT [redacted] | TITLE [redacted] A B | DATE [redacted]

REVISIONS

7-28-67

10-2-67

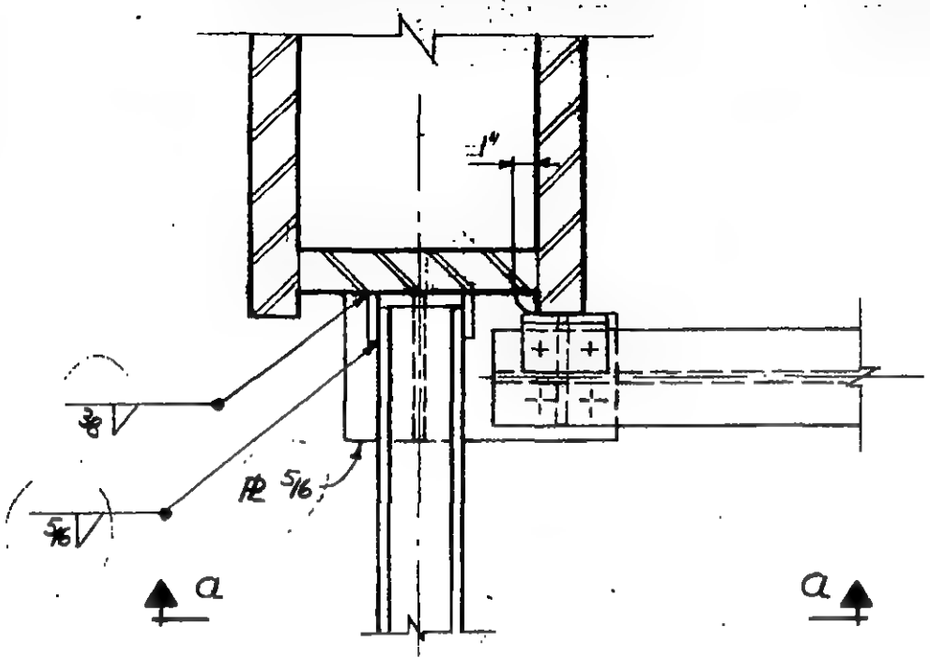

Plan
Detail 265 A

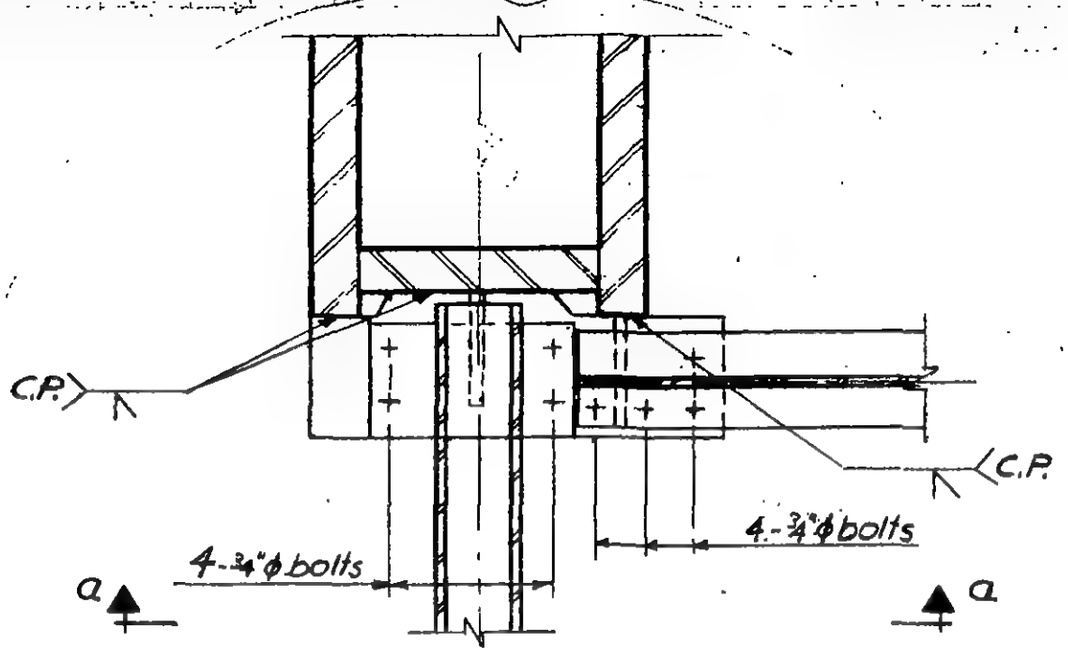

Plan b-b
Detail 265 B

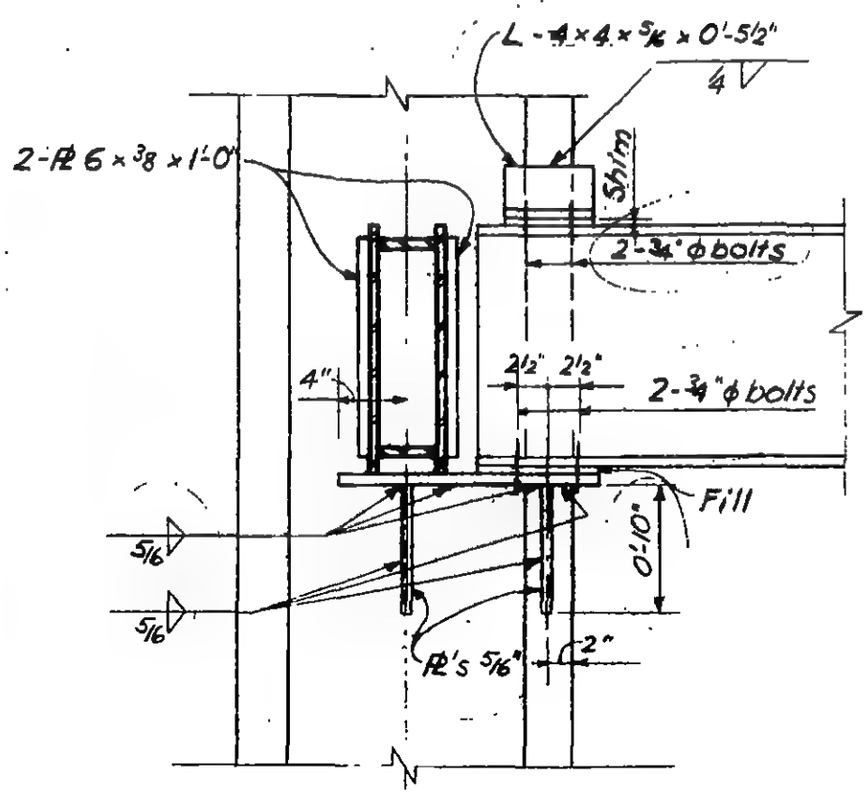

Section a-a

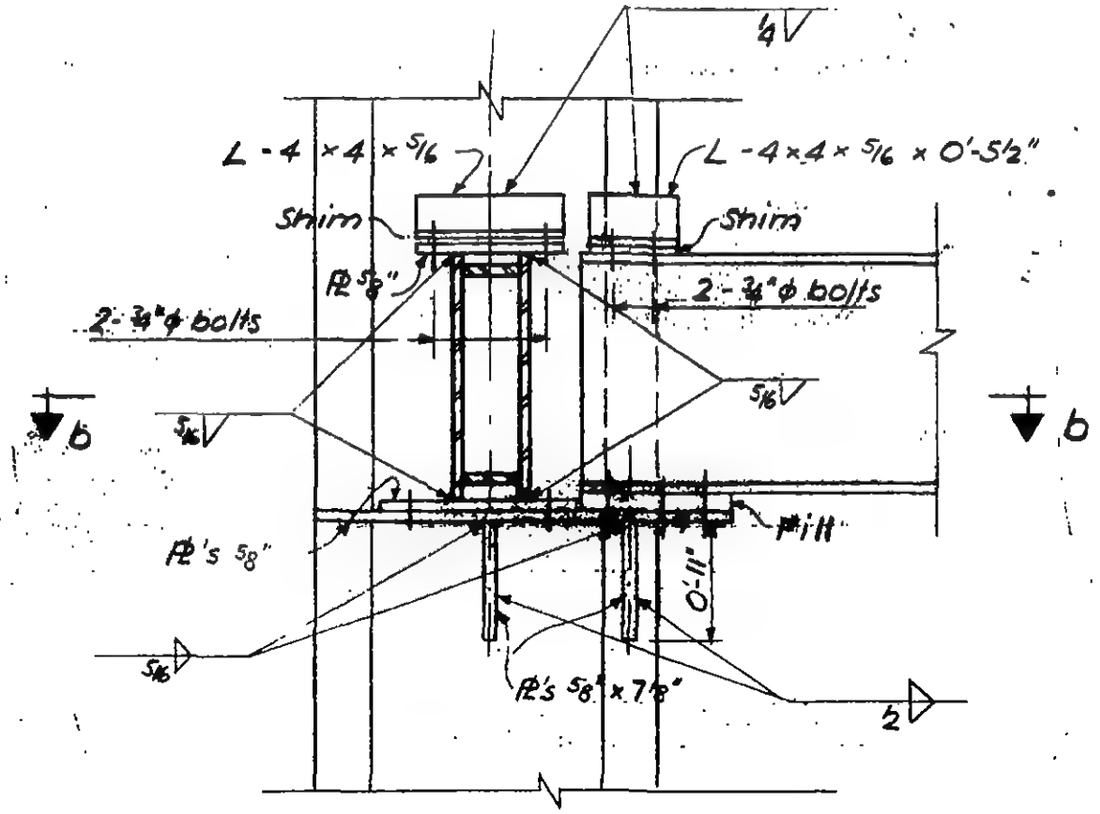

Section a-a

LICENSED PROFESSIONAL ENGINEER
LESLIE E. ROBERTSON
No. 34560
UNIVERSITY OF THE STATE OF NEW YORK

6-ABI-70

SKILLING - HELLE - CHRISTIANSEN - ROBERTSON Structural & Civil Engineers

PROJECT THE WORLD TRADE CENTER | TITLE CONNECTION DETAIL 265C | DATE 2-9-68

REVISIONS

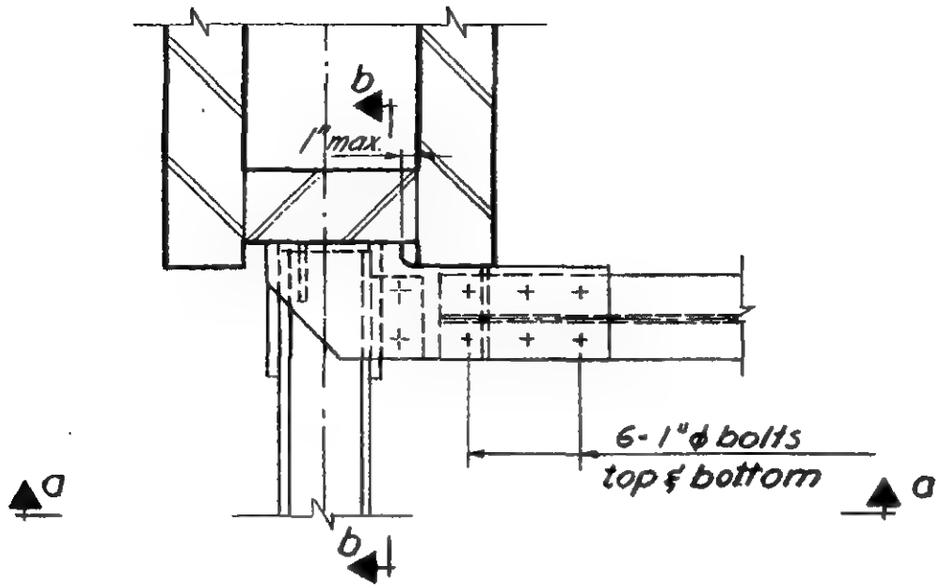

Plan

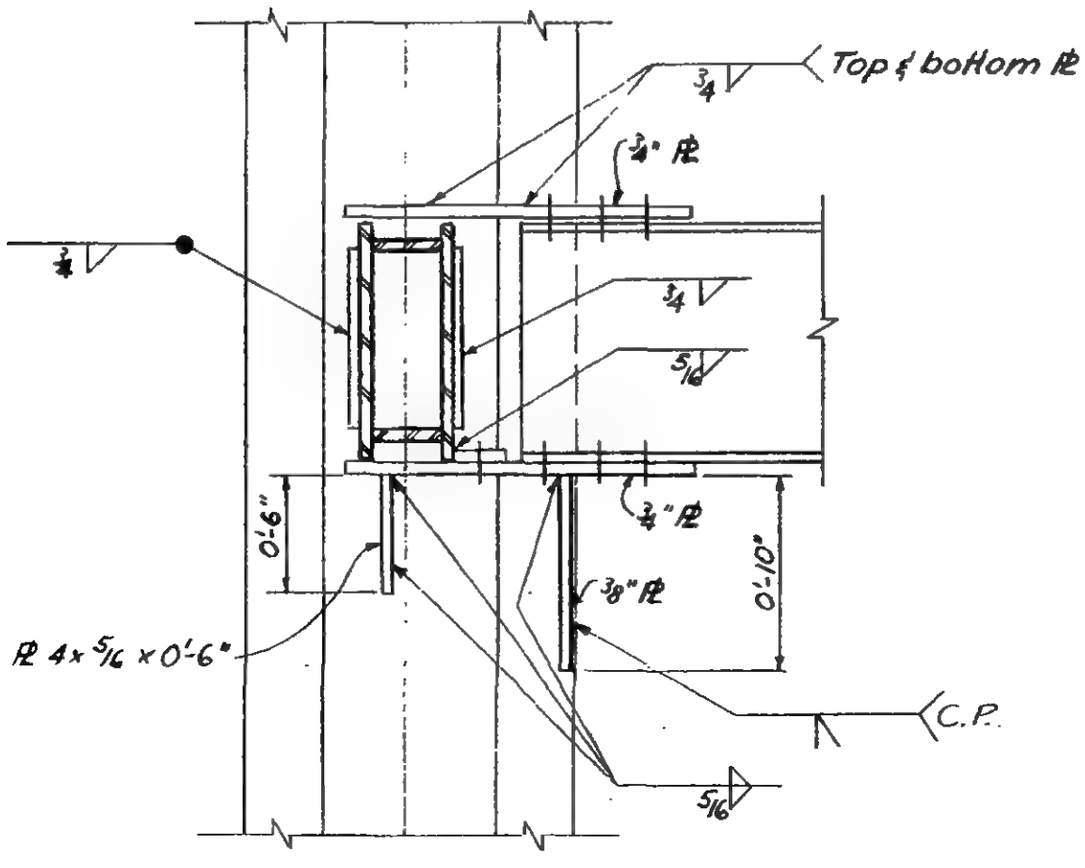

Section a-a

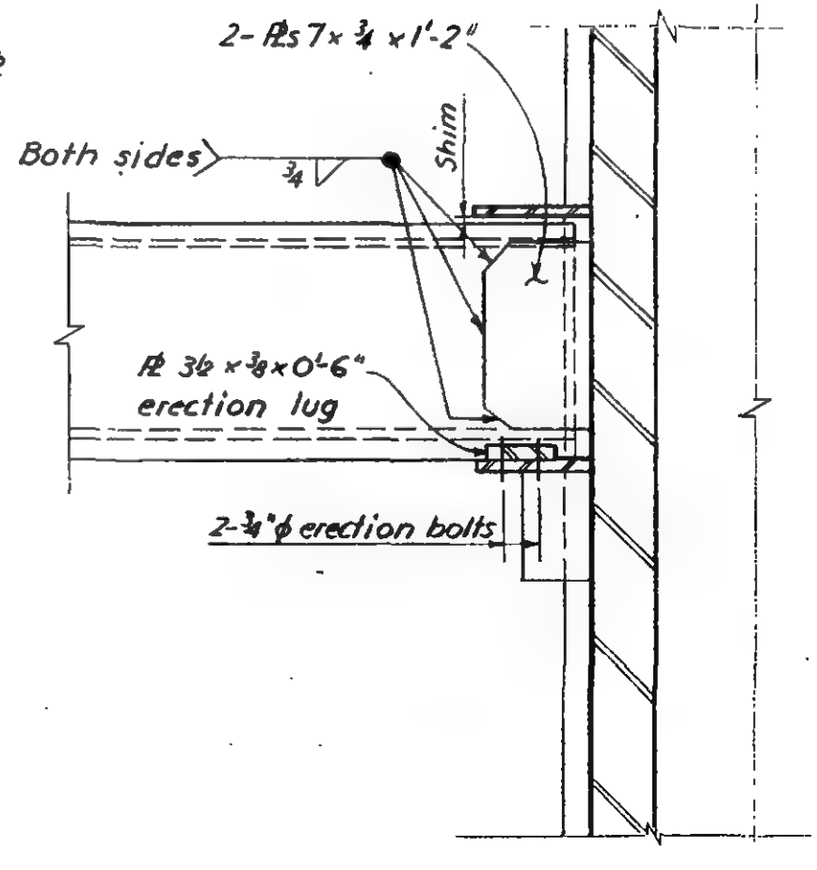

Section b-b

LICENSED PROFESSIONAL ENGINEER
LESLIE E. ROBERTSON
No. 34360
UNIVERSITY OF THE STATE OF NEW YORK

6-ABI-70.1

SKILLING - HELLE - CHRISTIANSEN - ROBERTSON Structural & Civil Engineers

PROJECT THE WORLD TRADE CENTER | TITLE CONNECTION DETAIL 265 D | DATE 1-24-68

REVIBIONS

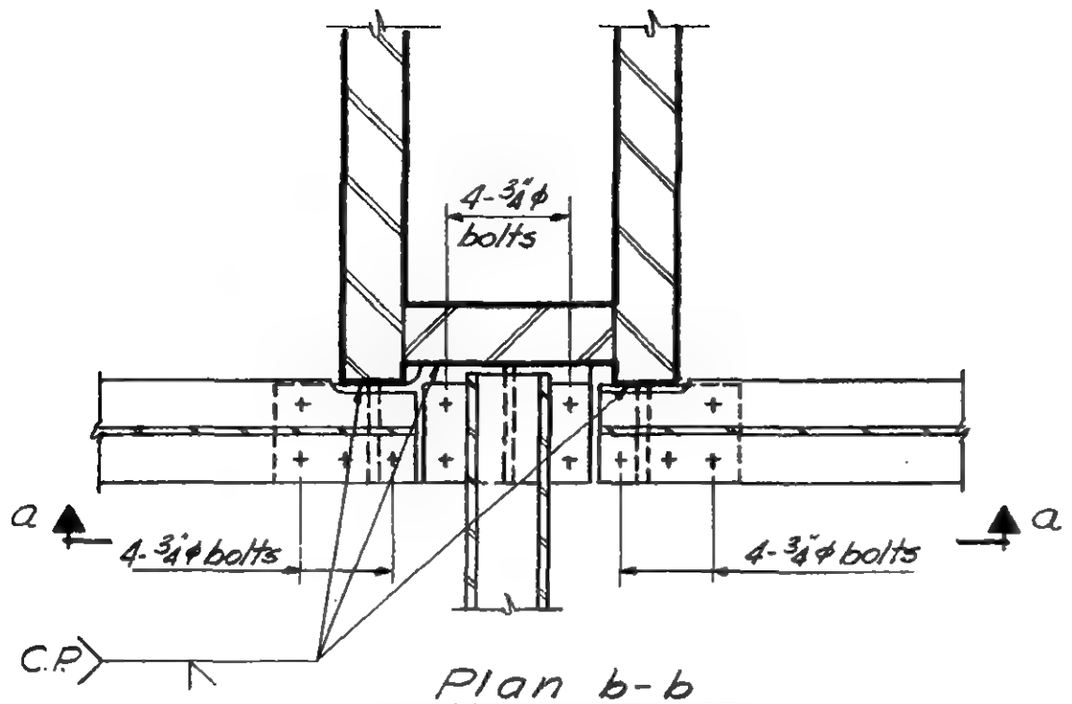

Plan b-b

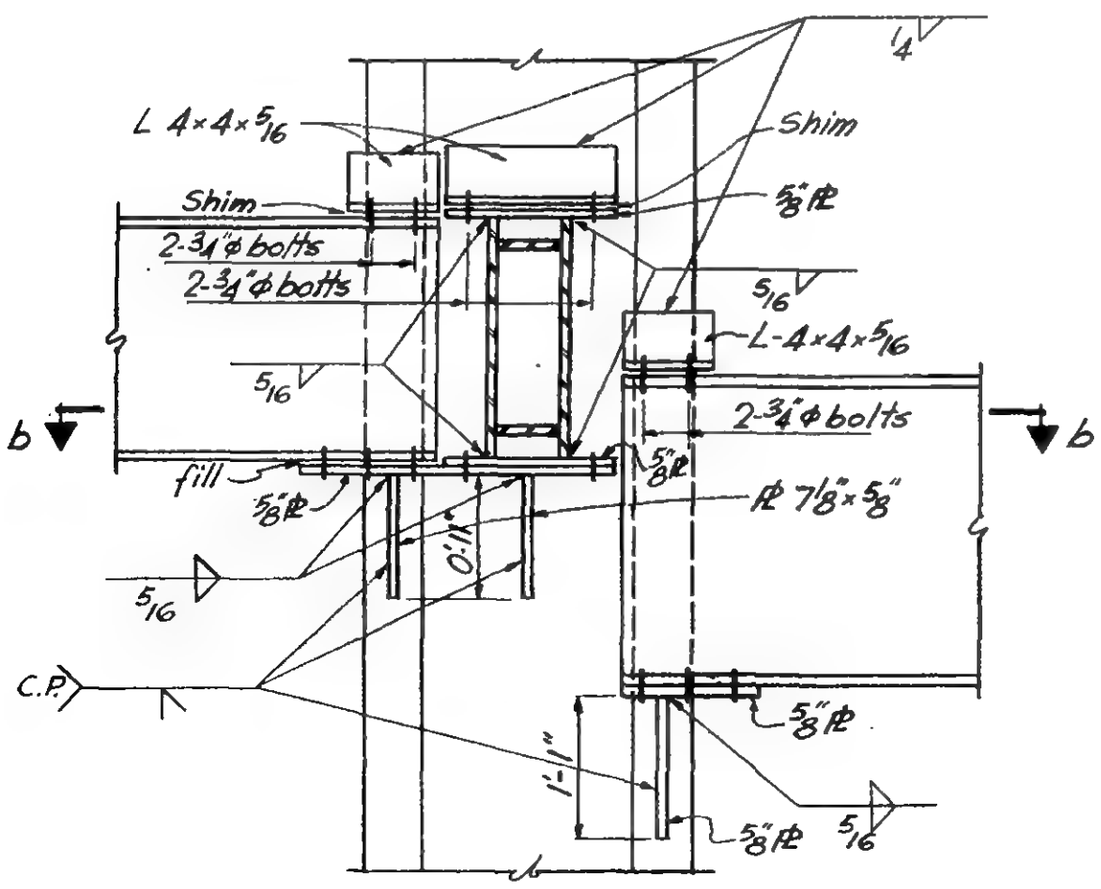

Section a-a

LICENSED PROFESSIONAL ENGINEER
LESLIE E. ROBERTSON
No. 34360
UNIVERSITY OF THE STATE OF NEW YORK

6-AB1-70.2

WORTHINGTON, SKILLING, HELLE & JACKSON — Civil & Structural Engineers

PROJECT: THE WORLD TRADE CENTER | TITLE: CONNECTION DETAIL 266 A & B | DATE: 6-30-67

REVISIONS
10-5-67
11-27-68

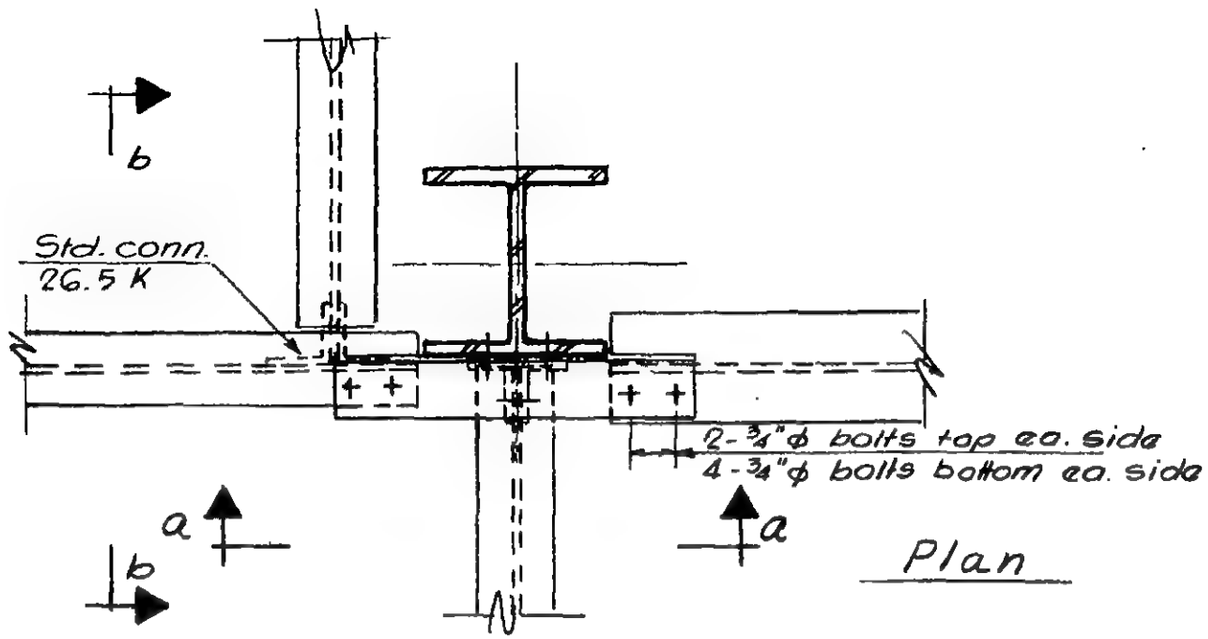

Plan

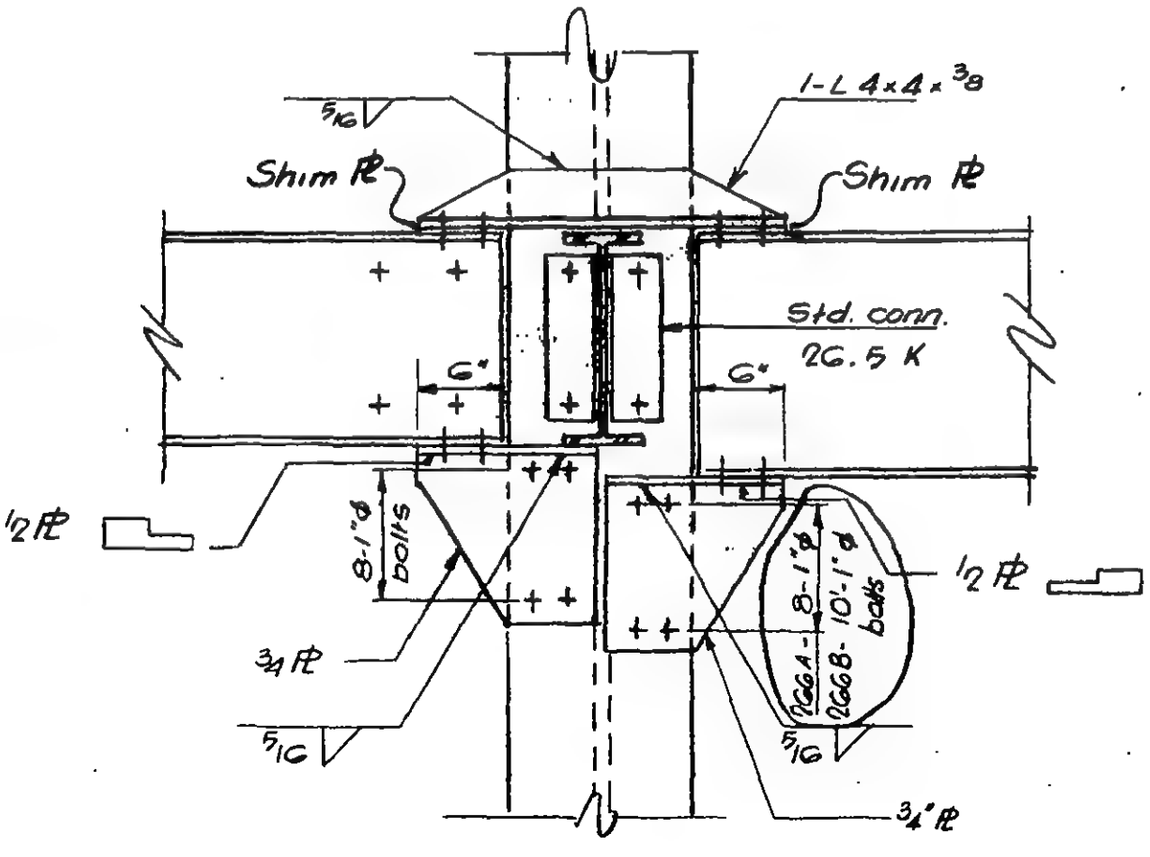

SECTION a-a

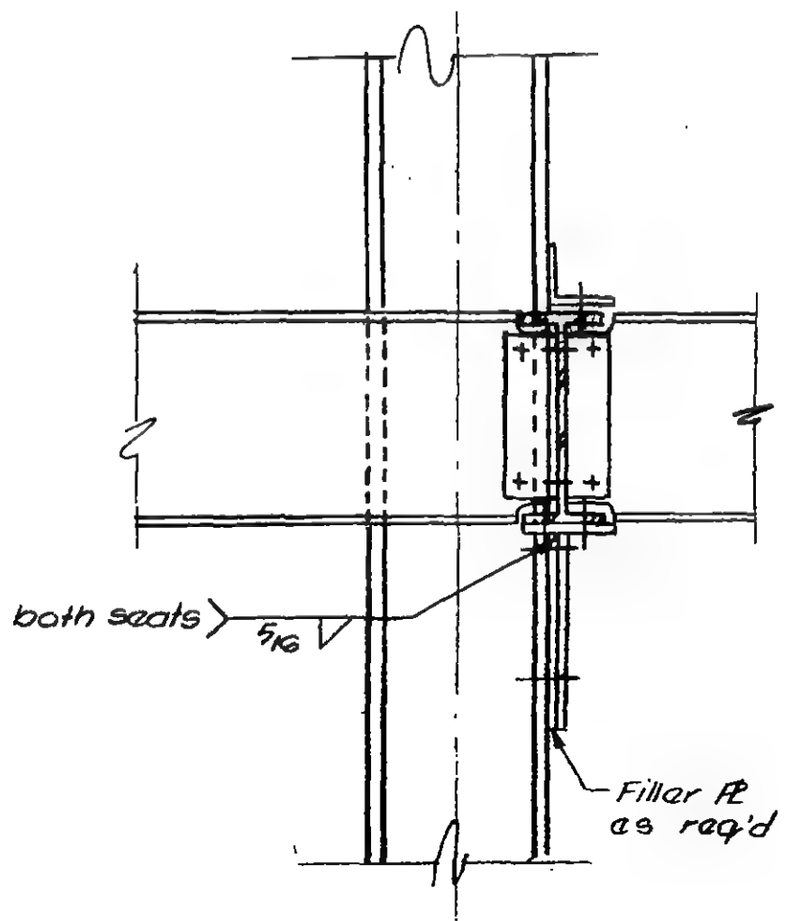

SECTION b-b

G-AB1-71

LICENSED PROFESSIONAL ENGINEER
LESLIE E. ROBERTSON
No. 24360
UNIVERSITY OF THE STATE OF NEW YORK

SKILLING - HELLE - CHRISTIANSEN - ROBERTSON — Structural & Civil Engineers

PROJECT: THE WORLD TRADE CENTER | TITLE: CONNECTION DETAIL 267A, B | DATE: 6-5-67

REVISIONS
9-15-67
11-10-67

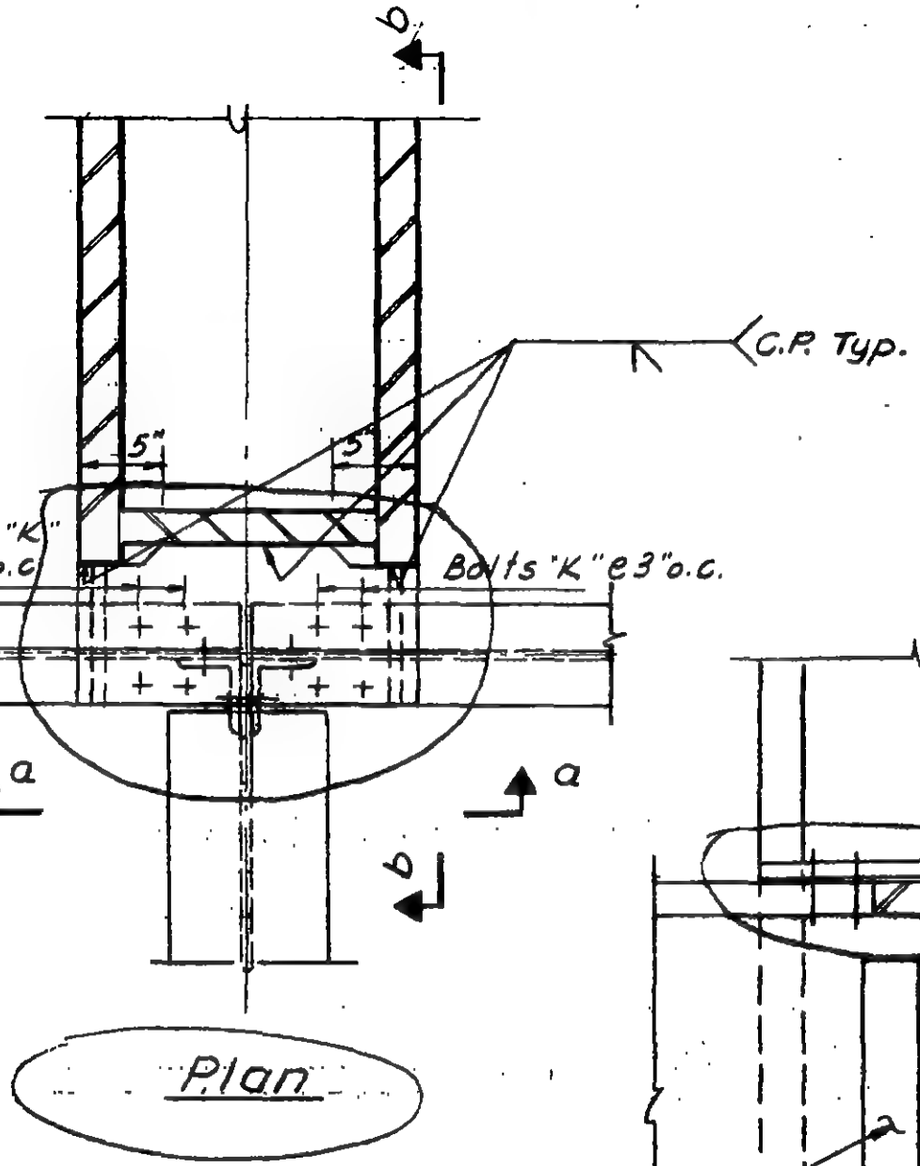

Plan

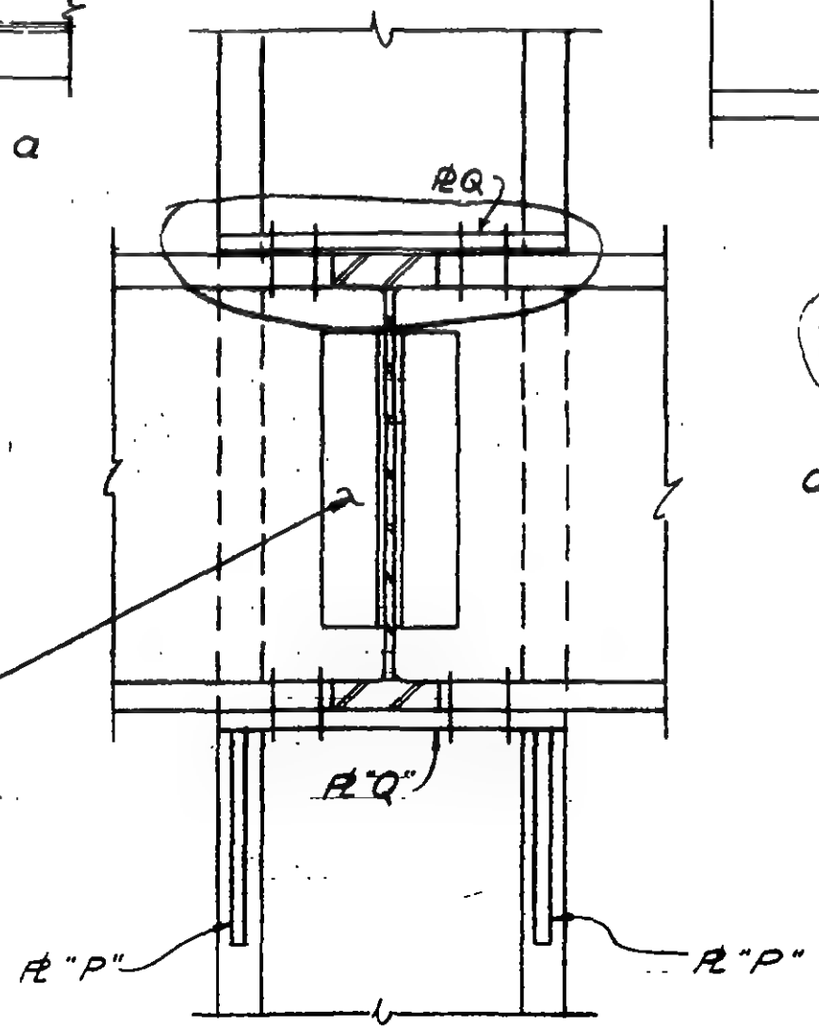

Section a-a

Standard conn's
R = 56ᵏ for 267A
R = 27ᵏ for 267B.

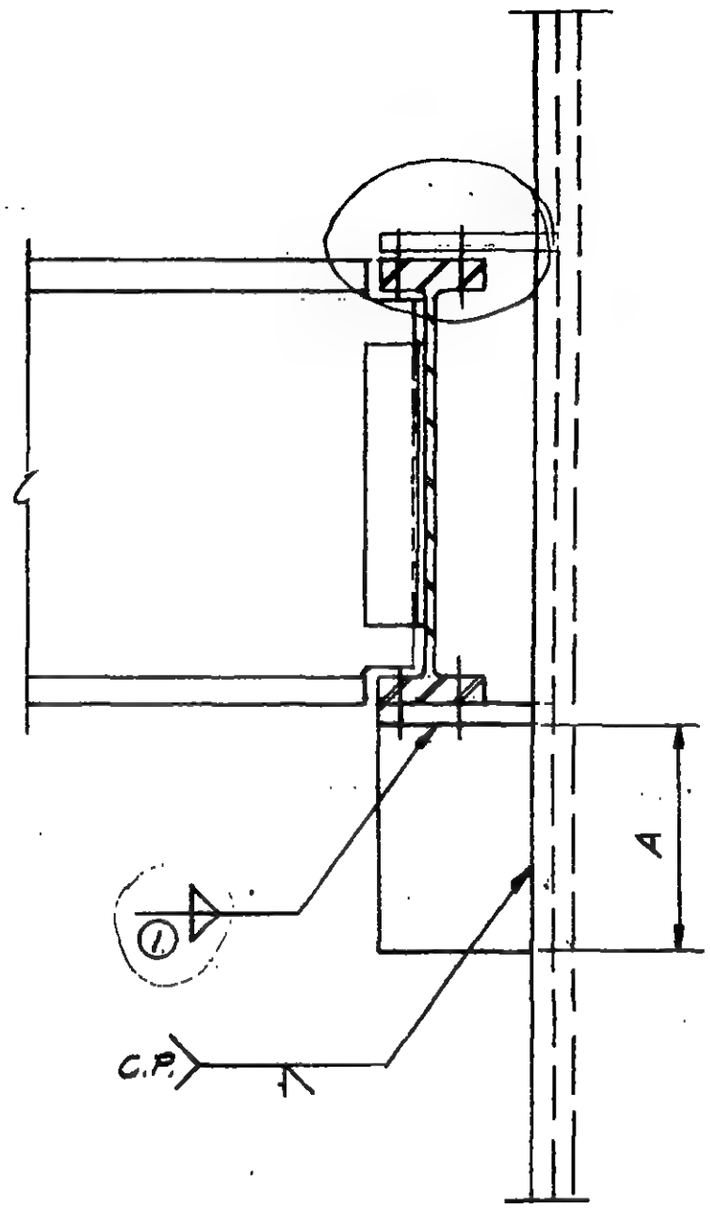

Section b-b

6-AB1-72

SKILLING - HELLE - CHRISTIANSEN - ROBERTSON Structural & Civil Engineers

PROJECT THE WORLD TRADE CENTER | TITLE SCHEDULE FOR DETAIL 267A & B | DATE 9-15-67

REVISIONS
11-10-67

	267A	267B				
PLATES:						
PL P	3/4	5/8				
PL Q	3/4	5/8				
DIMENSIONS:						
"A"	1'-3"	0'-10"				
BOLTS:						
"K"	4-3/4"ϕ	4-3/4"ϕ				
WELDS:						
(1)	5/16	5/16"				

G-ABI-72.1

WORTHINGTON, SKILLING, HELLE & JACKSON — Civil & Structural Engineers

PROJECT: THE WORLD TRADE CENTER | TITLE: CONNECTION DETAIL 268A | DATE: 7/14/67

REVISIONS
8-8-67
11-16-67

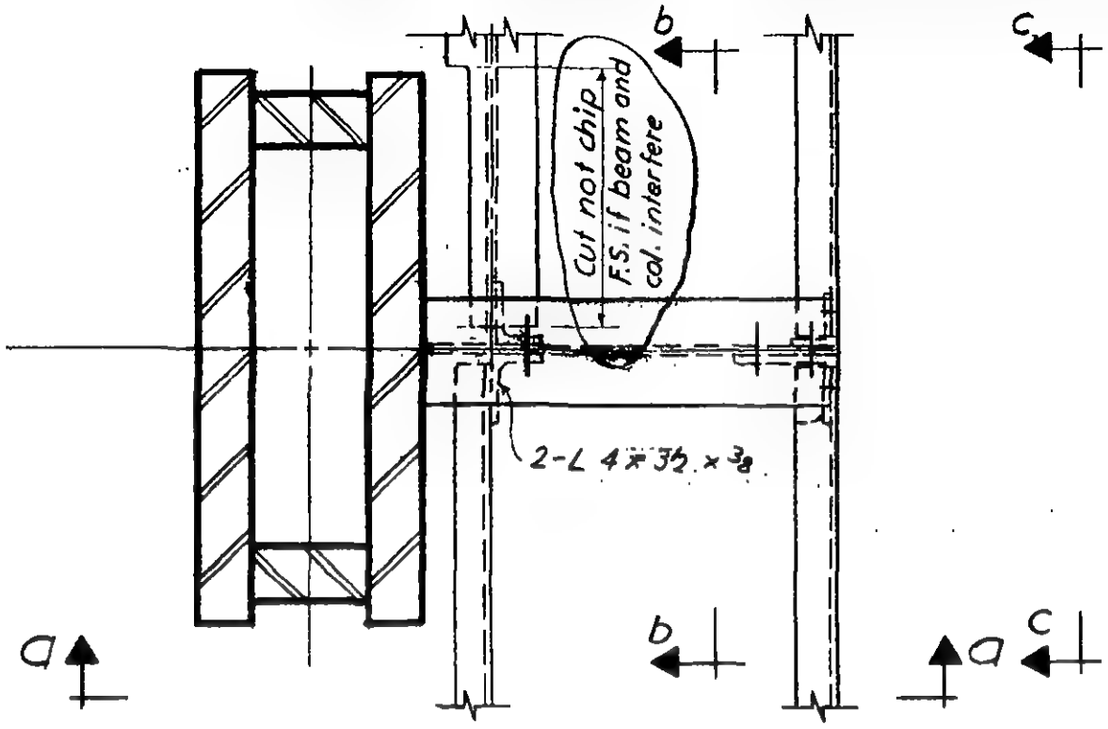

Plan

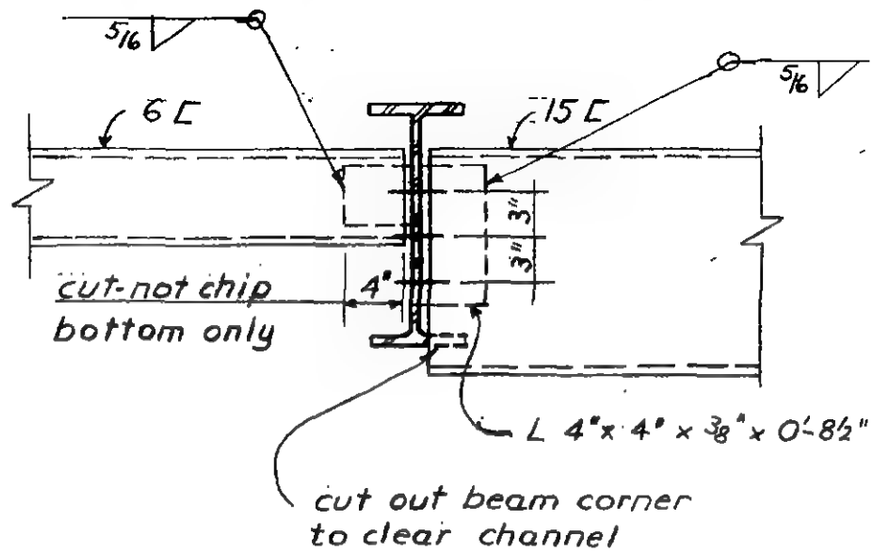

Section c-c

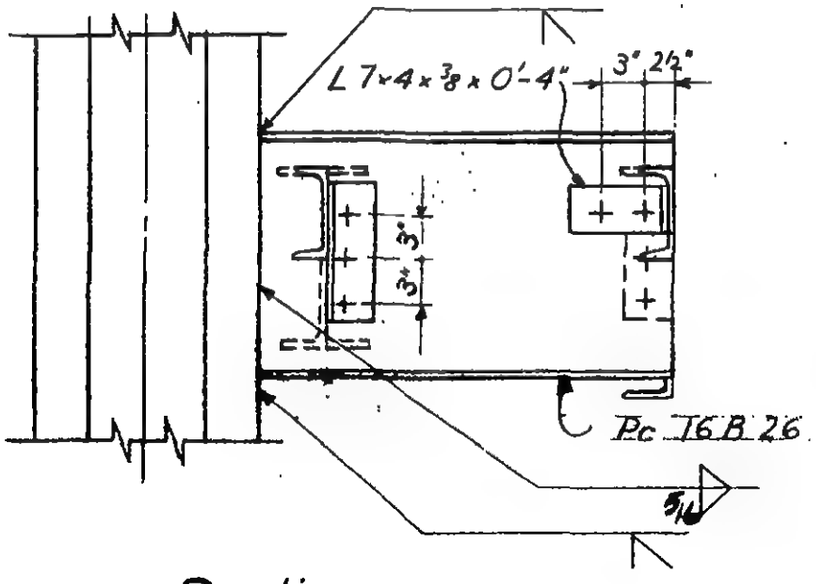

Section a-a

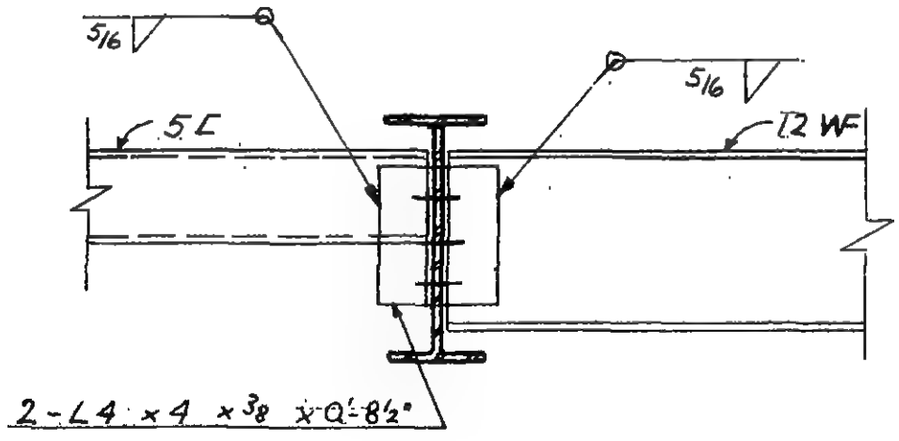

Section b-b

All bolts ¾" ϕ

LICENSED PROFESSIONAL ENGINEER
LESLIE E. ROBERTSON
No. 34360
STATE OF NEW YORK

6-AB1-73

WORTHINGTON, SKILLING, HELLE & JACKSON — Civil & Structural Engineers

PROJECT: THE WORLD TRADE CENTER | TITLE: CONNECTION DETAIL 269 | DATE: 7/20/67

REVISIONS

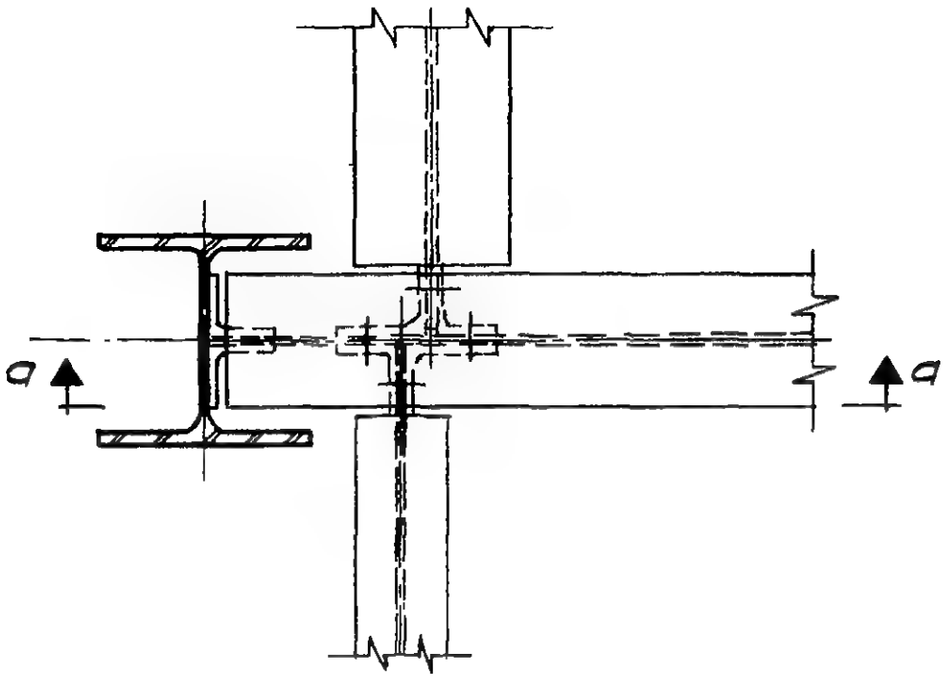

PLAN

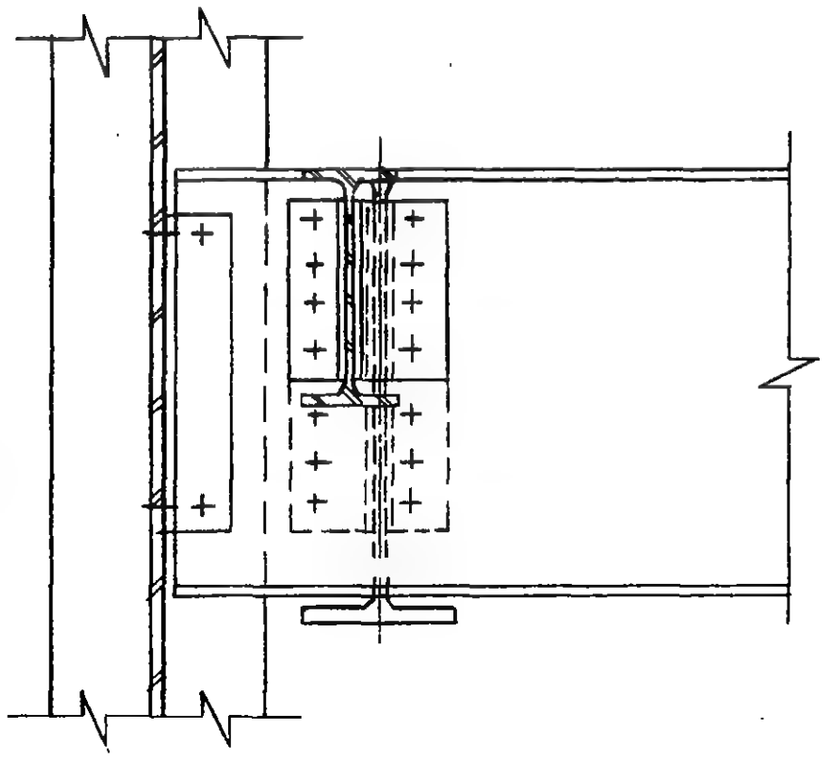

Section a-a

LICENSED PROFESSIONAL ENGINEER
LESLIE E. ROBERTSON
No. 34360
UNIVERSITY OF THE STATE OF NEW YORK

6-AB1-74

WORTHINGTON, SKILLING, HELLE & JACKSON — Civil & Structural Engineers

PROJECT: THE WORLD TRADE CENTER | TITLE: CONNECTION DETAIL 270 A | DATE: 6-5-67

REVISIONS
9-15-67
11-10-67

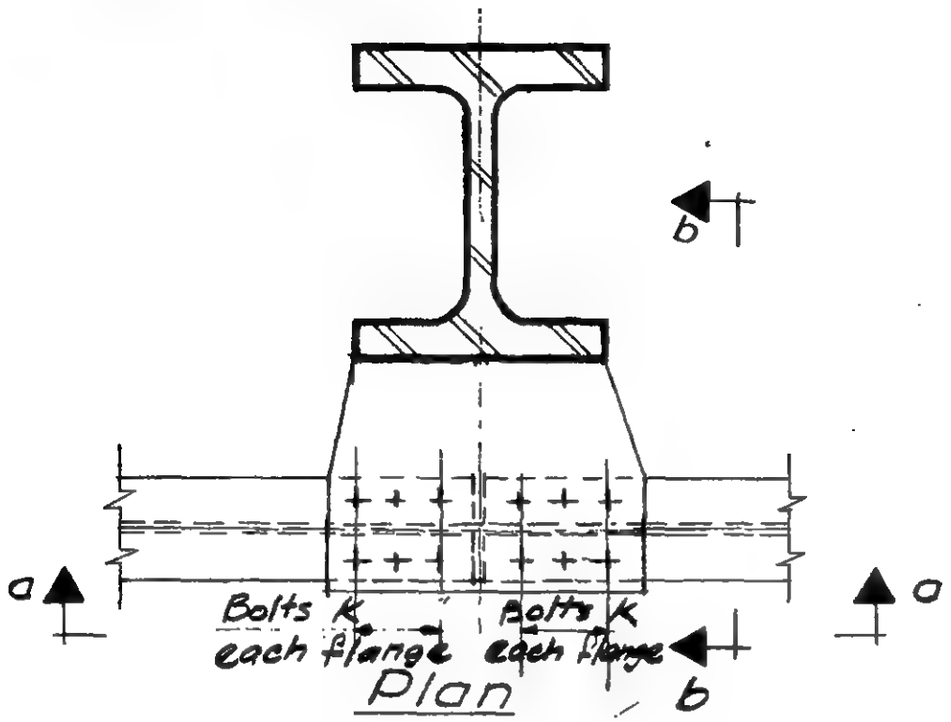

Plan

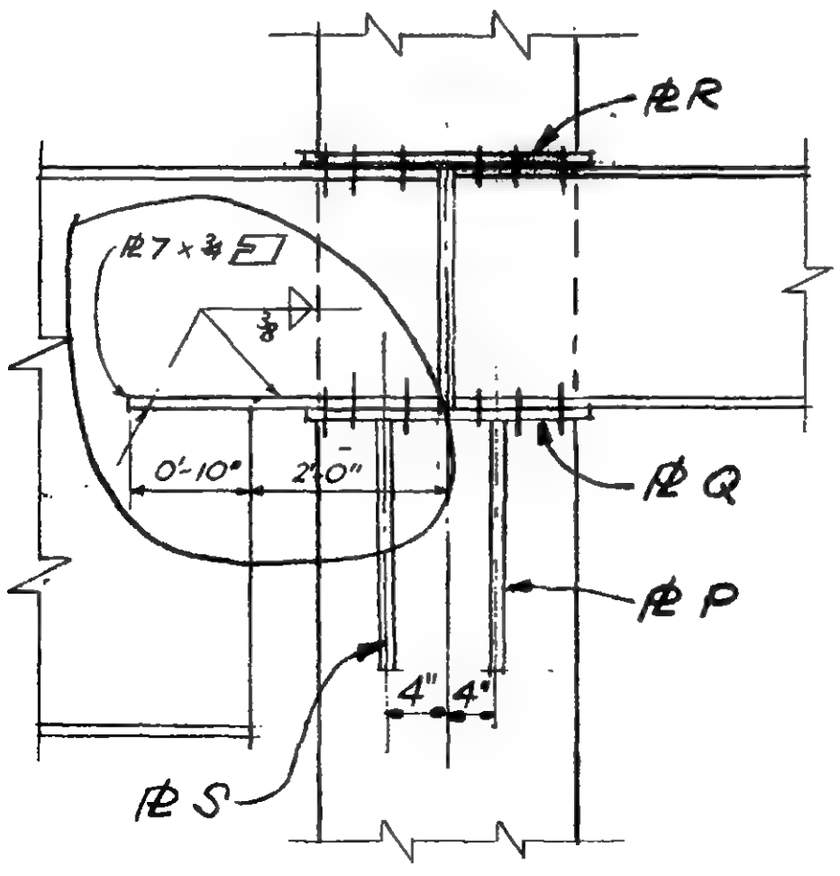

Section a-a

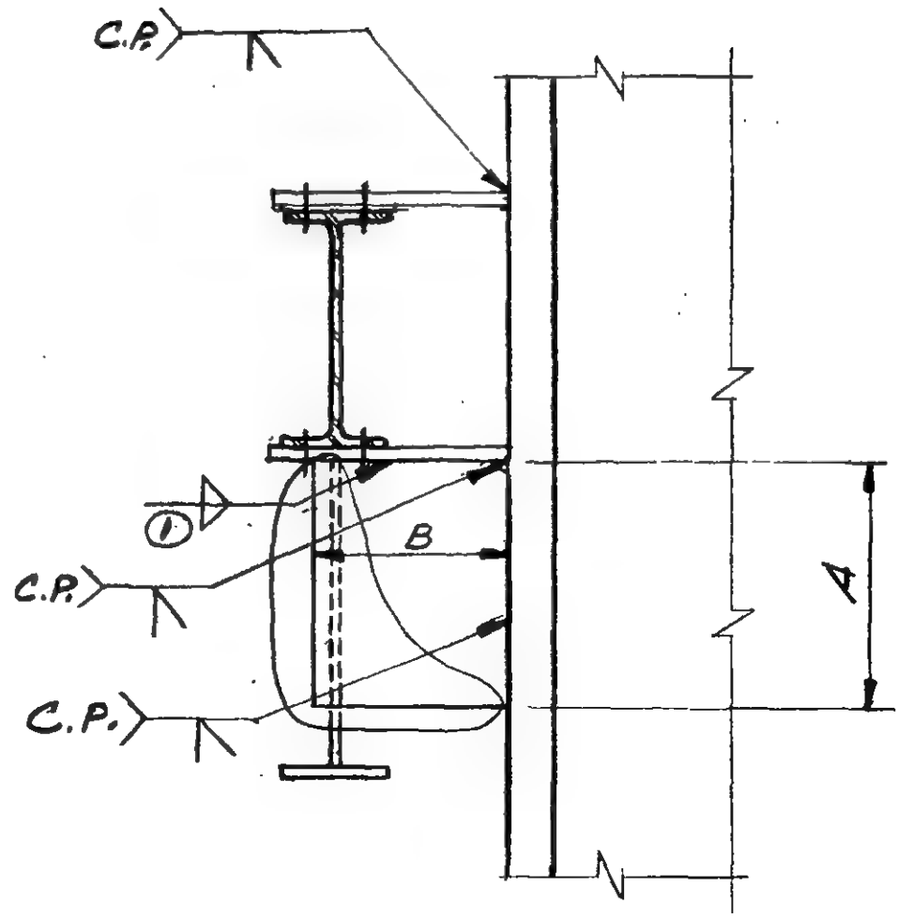

Section b-b

6-AB1-75

LICENSED PROFESSIONAL ENGINEER
LESLIE E. ROBERTSON
No. 34360
UNIVERSITY OF THE STATE OF NEW YORK

SKILLING - HELLE - CHRISTIANSEN - ROBERTSON Structural & Civil Engineers

PROJECT THE WORLD TRADE CENTER | TITLE SCHEDULE FOR DETAIL 270 A | DATE 9-15-67

REVISIONS

	270A
PLATE	
P	7/8"
Q	3/4"
R	5/8"
S	3/4"
DIM.	
A	1'-6"
B	1'-3"
BOLT	
K	6-7/8"Φ
WELD	
(1)	3/8

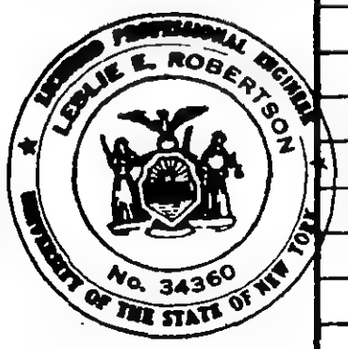

6-AB1-75.1

SKILLING - HELLE - CHRISTIANSEN - ROBERTSON Structural & Civil Engineers

PROJECT THE WORLD TRADE CENTER | TITLE CONNECTION DETAIL 271 A | DATE 6-19-67

REVISIONS

8-5-67

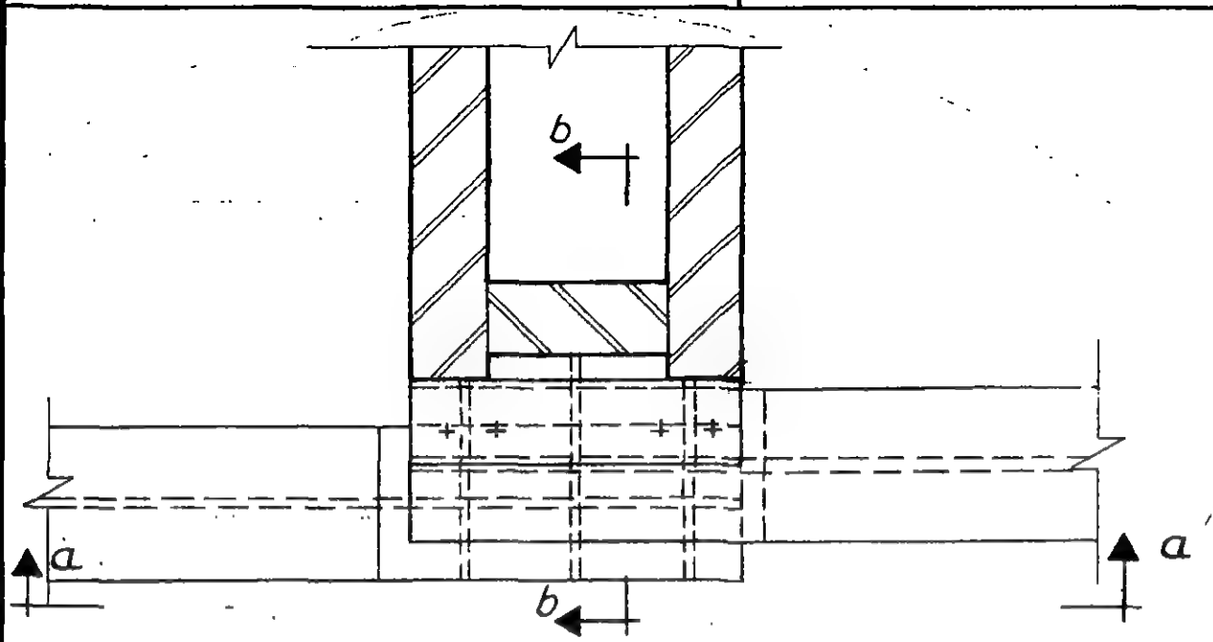

Plan

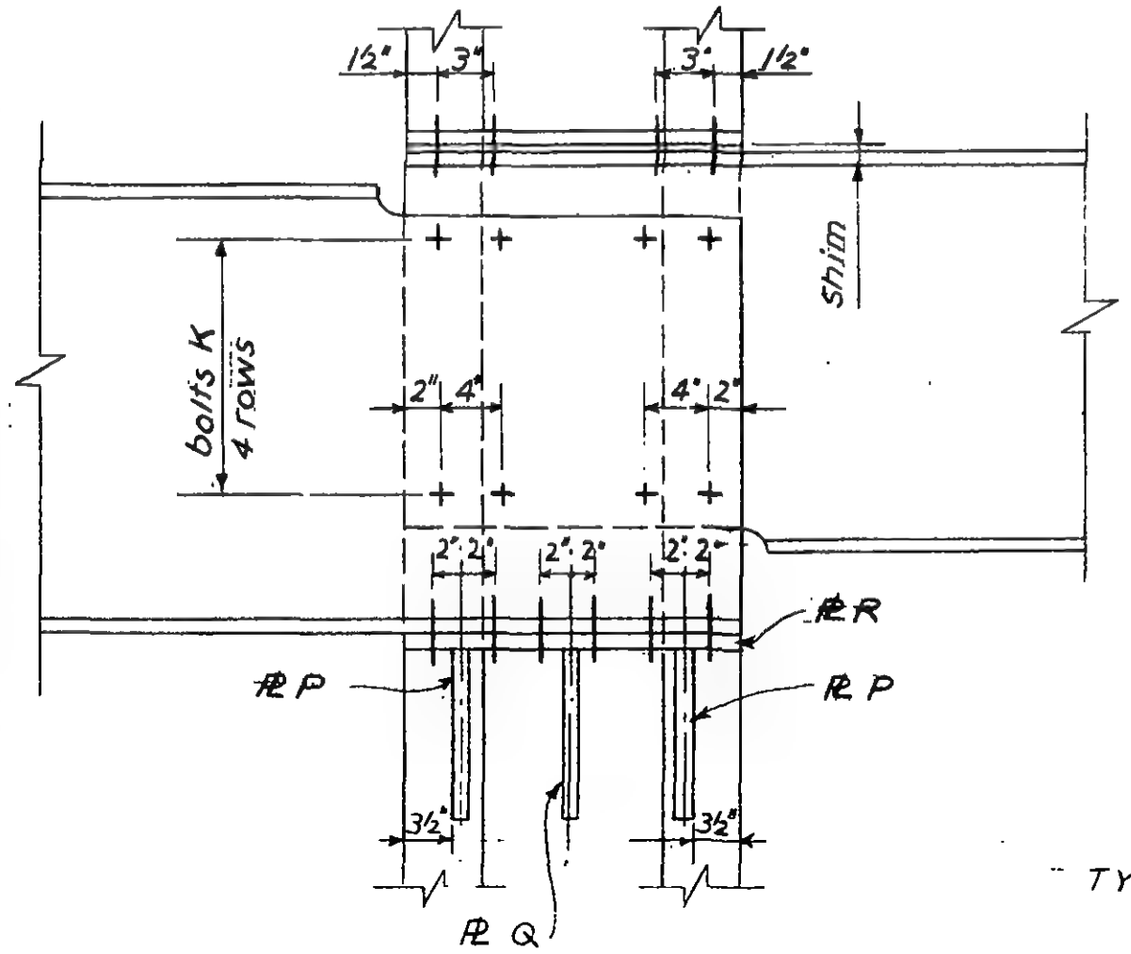

Section a-a

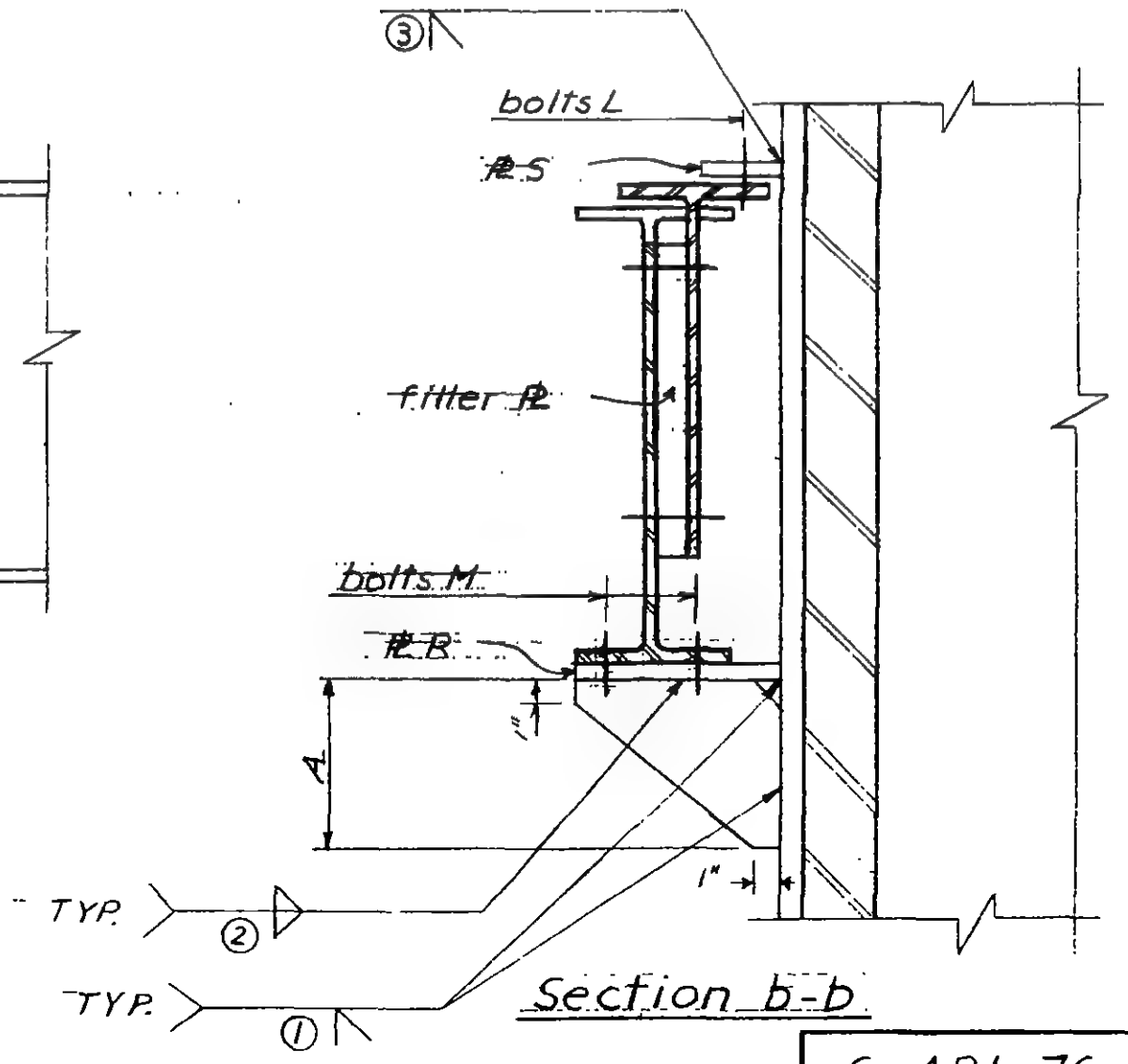

Section b-b

LICENSED PROFESSIONAL ENGINEER
LESLIE E. ROBERTSON
No. 34360
STATE OF NEW YORK

6-AB1-76

WORTHINGTON, SKILLING, HELLE & JACKSON — Civil & Structural Engineers

PROJECT THE WORLD TRADE CENTER | TITLE SCHEDULE FOR DETAIL 271 | DATE 8-5-67

REVISIONS

	A
PLATES	
P	1½"
Q	1"
R	1"
S	½"
DIMENSIONS	
A	1'-2"
BOLTS	
K	7 - ¾" ϕ
L	4 - ¾" ϕ
M	12 - ¾" ϕ
WELDS	
①	C.P.
②	½
③	C.P.

6-ABI-76.1

WORTHINGTON, SKILLING, HELLE & JACKSON — Civil & Structural Engineers

PROJECT THE WORLD TRADE CENTER | TITLE CONNECTION DETAIL 272A | DATE 6-19-67

REVISIONS

8-5-67

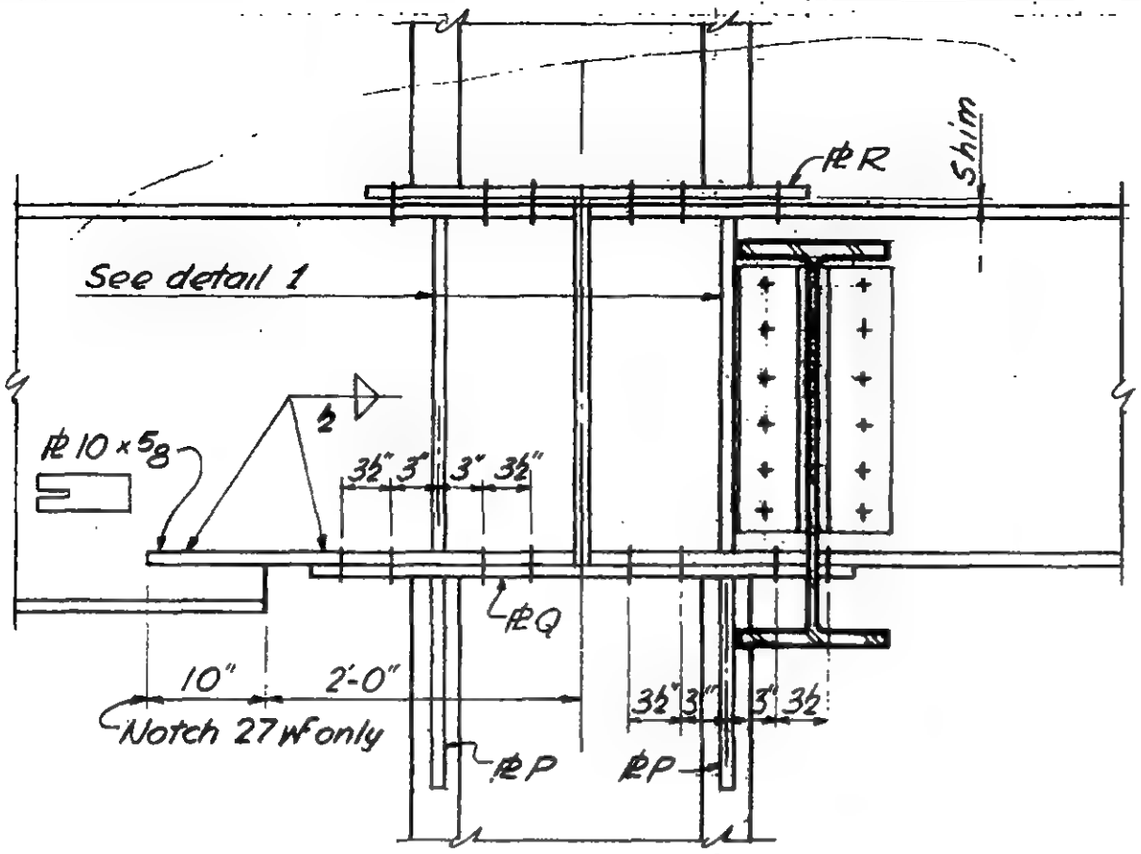

SECTION a-a

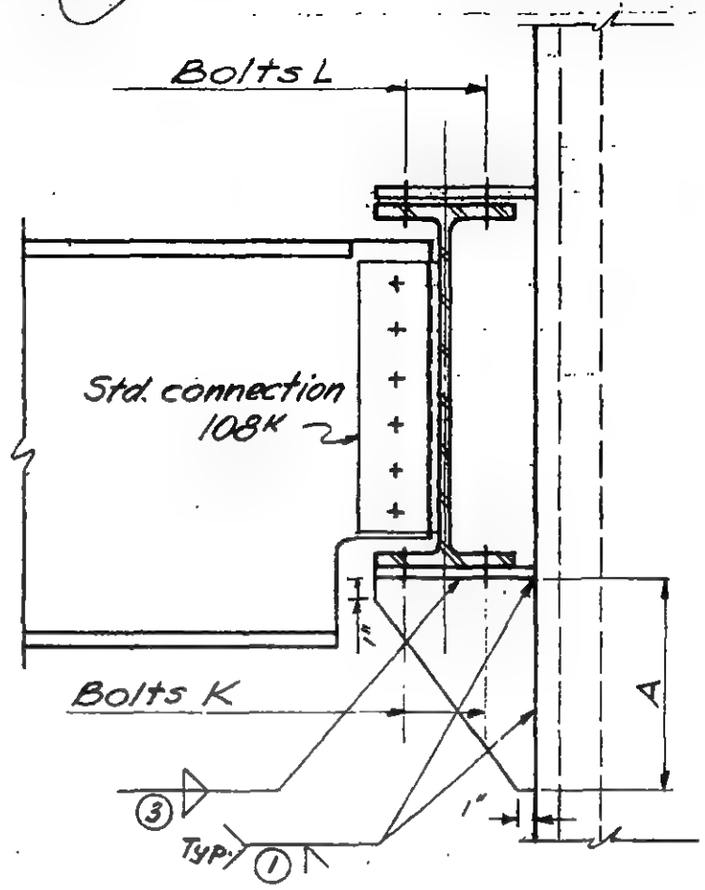

SECTION b-b

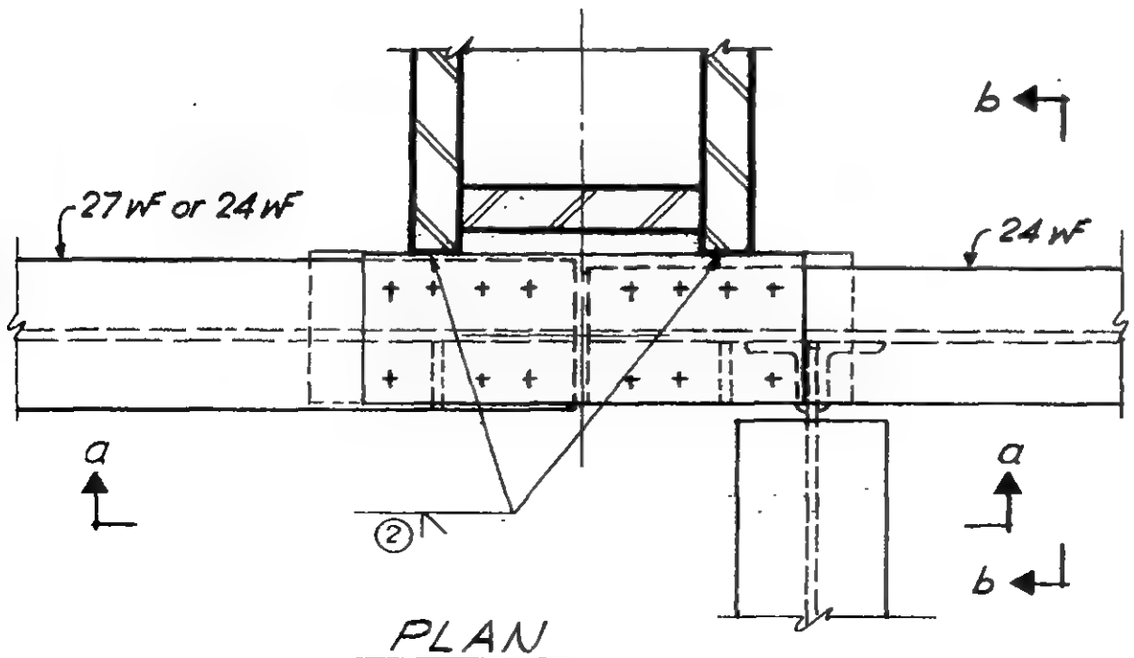

PLAN

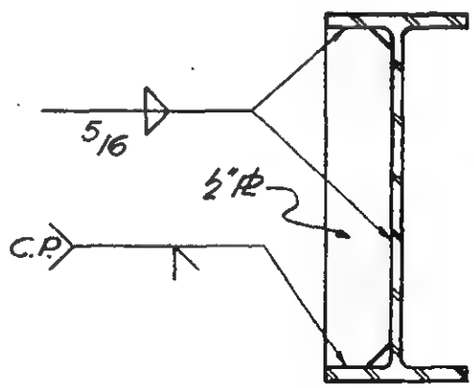

Detail 1

LICENSED PROFESSIONAL ENGINEER
LESLIE E. ROBERTSON
No. 34360
UNIVERSITY OF THE STATE OF NEW YORK

G-ABI-77

WORTHINGTON, SKILLING, HELLE & JACKSON — Civil & Structural Engineers

PROJECT: THE WORLD TRADE CENTER | TITLE: SCHEDULE FOR DETAIL 272 A, C, D, G | DATE: [illegible]

REVISIONS

9-18-68

	272 A	272 C,D,G				
PLATES						
P	1"	3/4"				
Q	1"	1"				
R	1"	1"				
DIMENSION						
A	1'-4"	—				
BOLTS						
K	16-1"φ	—				
L	14-1"φ	—				
WELDS						
1	C.P.	—				
2	C.P.	—				
3	1/2	—				

LICENSED PROFESSIONAL ENGINEER
LESLIE E. ROBERTSON
No. 34360
STATE OF NEW YORK

6-AB1-77.1

SKILLING - HELLE - CHRISTIANSEN - ROBERTSON Structural & Civil Engineers

PROJECT THE WORLD TRADE CENTER | TITLE CONNECTION DETAIL 272B | DATE 2-9-68

REVISIONS

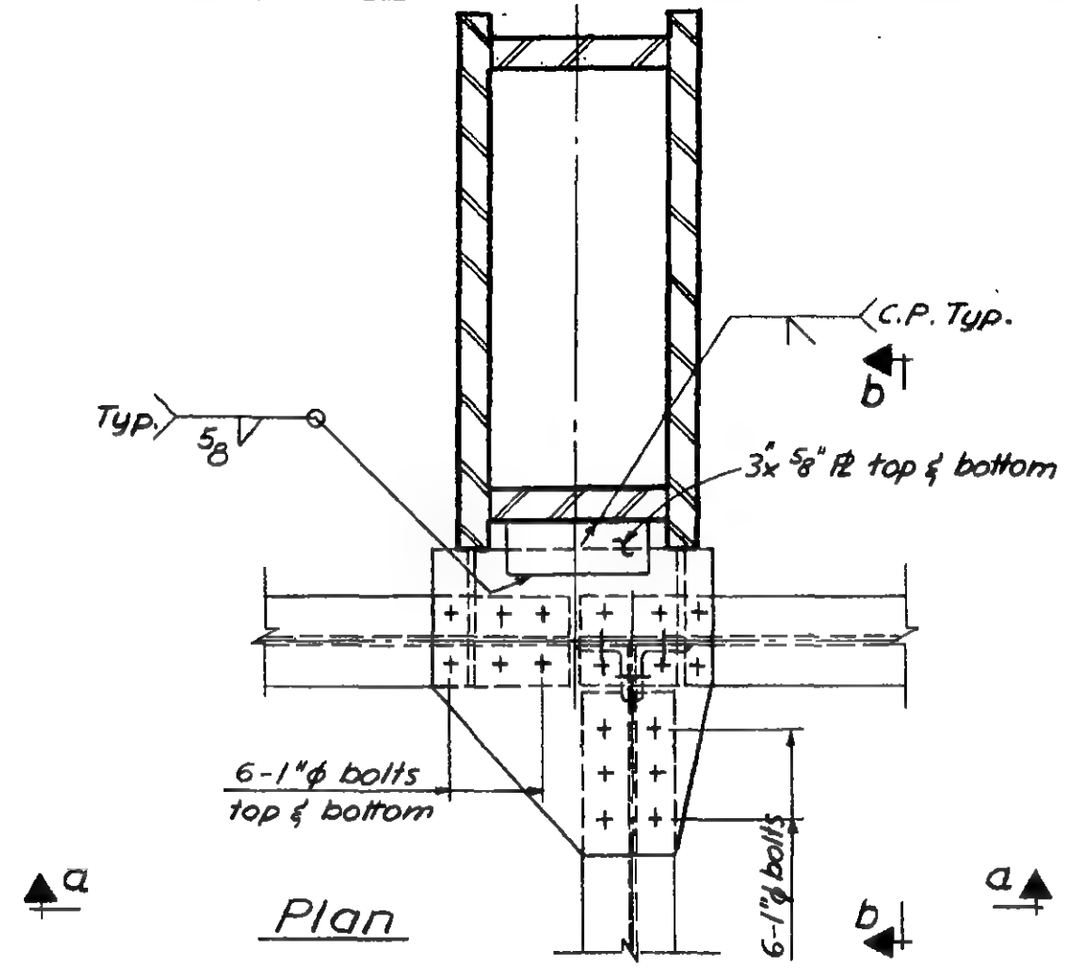

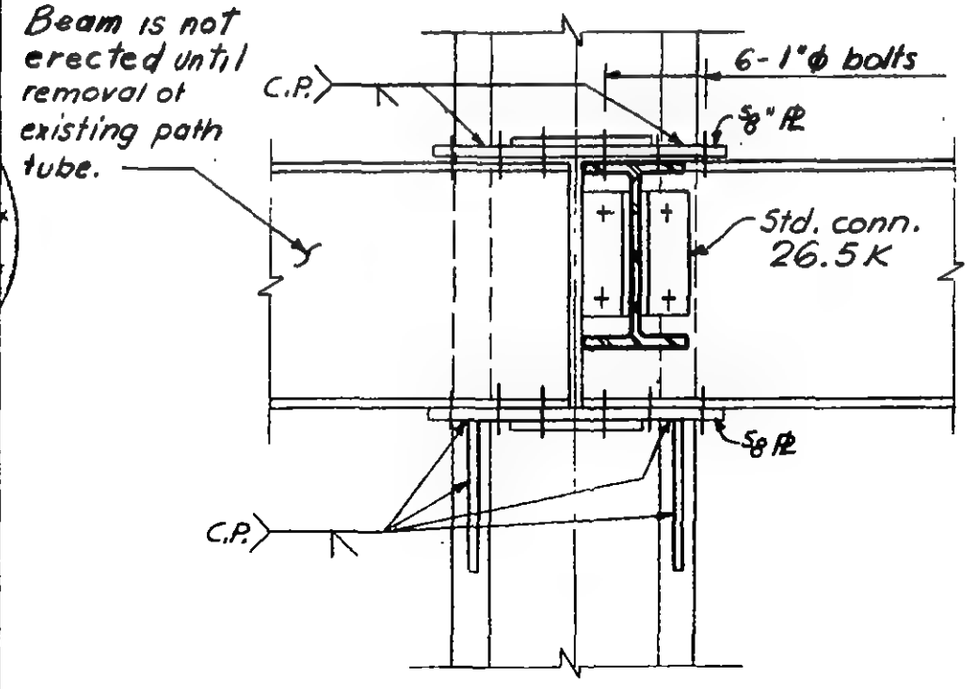

Section a-a

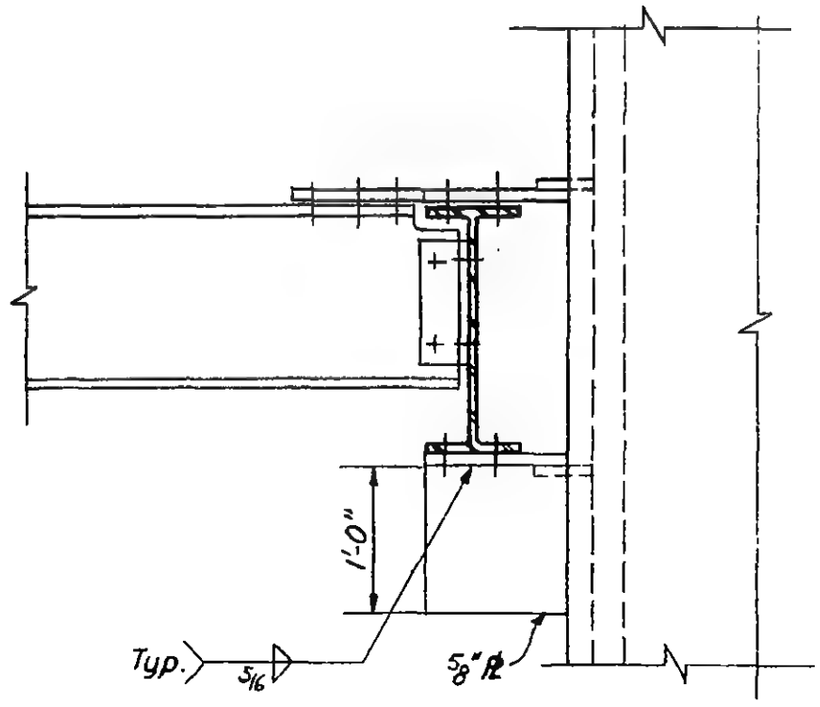

Section b-b

6-ABI-77.2

LICENSED PROFESSIONAL ENGINEER
LESLIE E. ROBERTSON
No. 34360
UNIVERSITY OF THE STATE OF NEW YORK

SKILLING, HELLE, CHRISTIANSEN, ROBERTSON — Structural & Civil Engineers

PROJECT: THE WORLD TRADE CENTER | TITLE: CONNECTION DETAIL ZZZ C, D, G | DATE: 9-18-68

REVISIONS

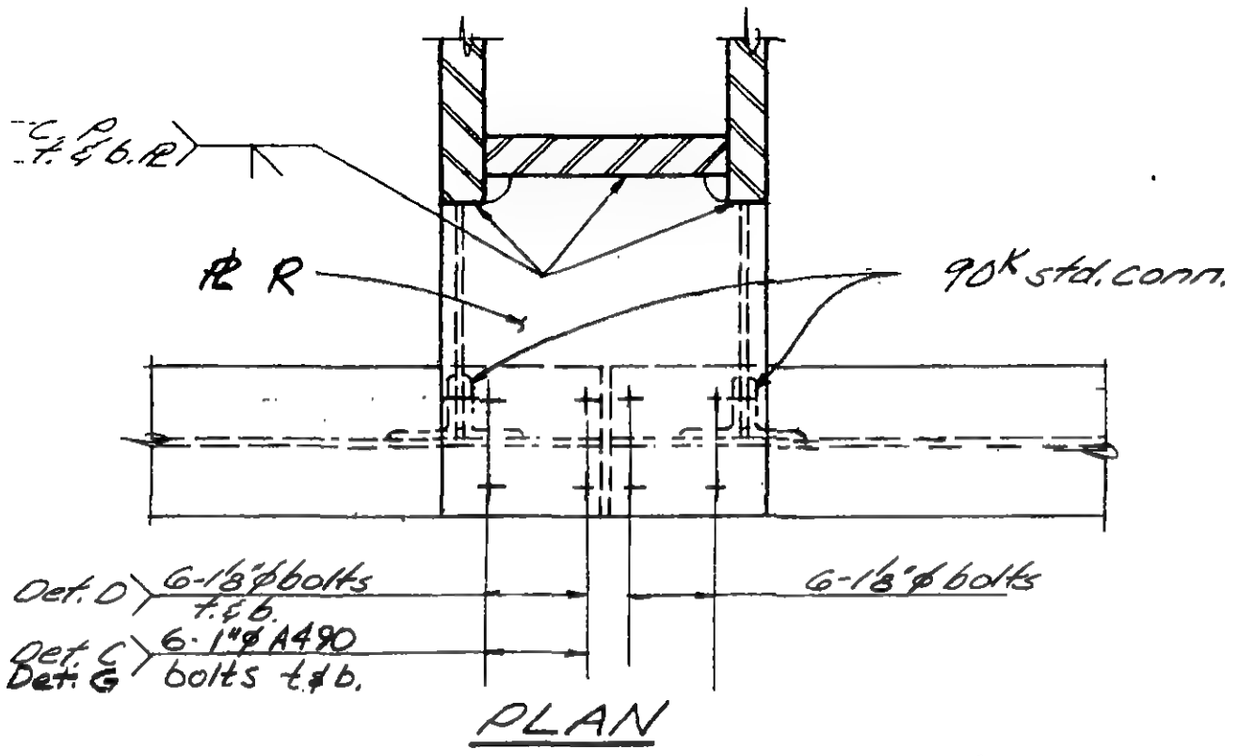

PLAN

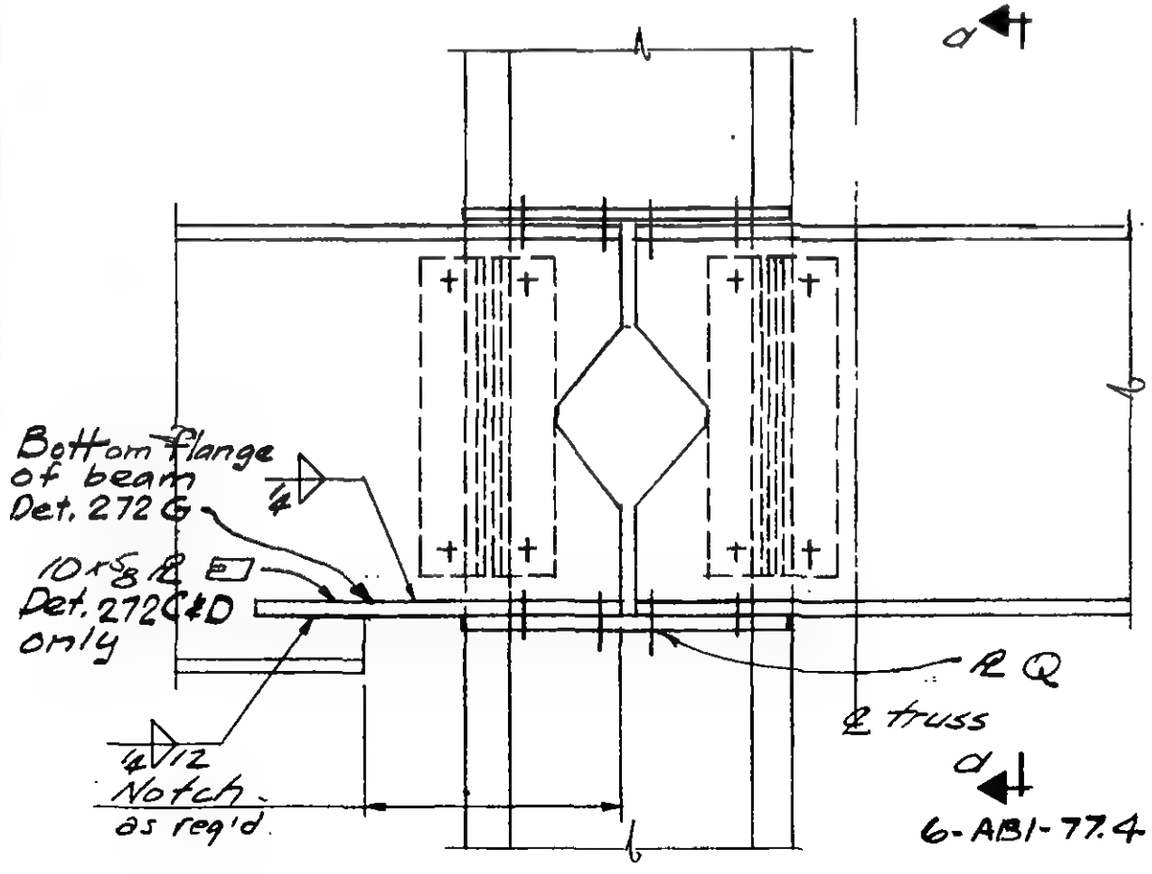

ELEVATION

LICENSED PROFESSIONAL ENGINEER — LESLIE E. ROBERTSON — No. 34360 — UNIVERSITY OF THE STATE OF NEW YORK

DESIGNED

DRAWN

REVIEWED

6-AB1-77.3

SKILLING, HELLE, CHRISTIANSEN, ROBERTSON — Structural & Civil Engineers

PROJECT: THE WORLD TRADE CENTER | TITLE: CONNECTION DETAIL 272 C, D, G | DATE: 9-18-68

REVISIONS

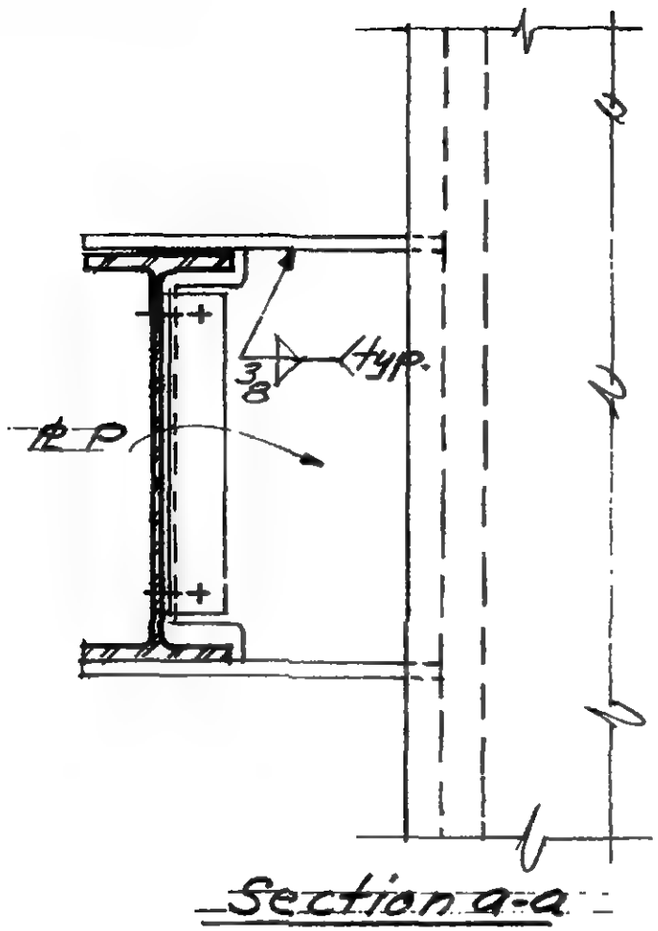

Section a-a

LICENSED PROFESSIONAL ENGINEER
LESLIE E. ROBERTSON
No. 34360
UNIVERSITY OF THE STATE OF NEW YORK

DESIGNED

DRAWN

REVIEWED

6-ABI-77.4

WORTHINGTON, SKILLING, HELLE & JACKSON — Civil & Structural Engineers

PROJECT	TITLE	DATE
THE WORLD TRADE CENTER	CONNECTION DETAIL 273 A & B	6-5-67

REVISIONS

10-2-67

2-21-68

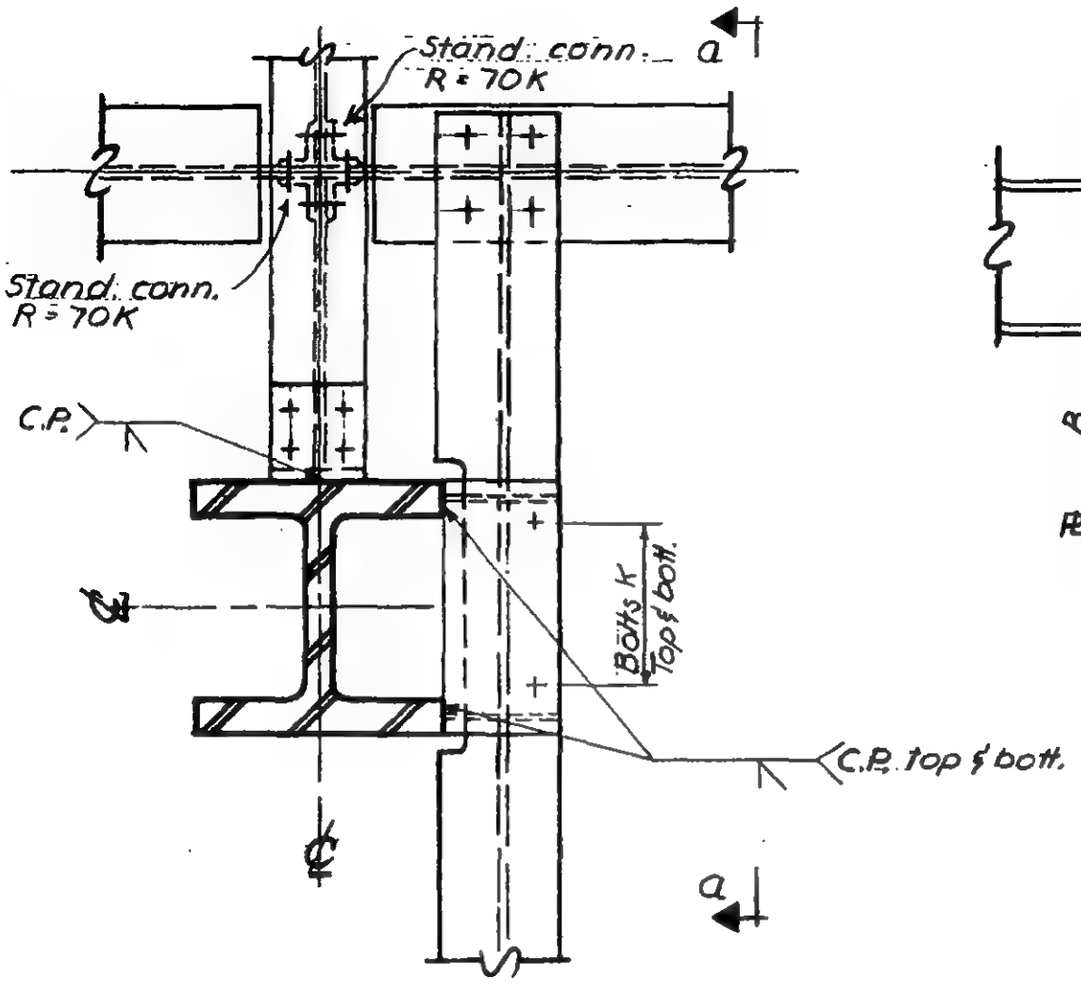

Plan

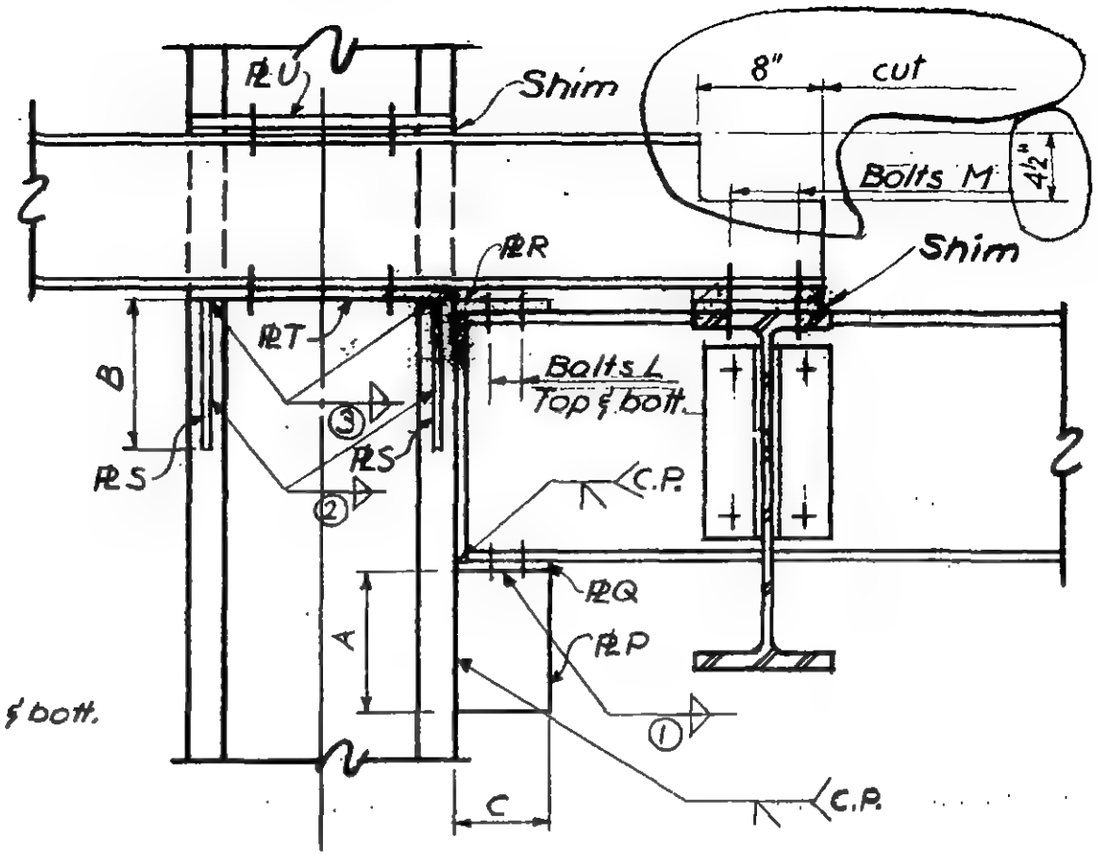

Section a-a

6-AB1-78

SKILLING - HELLE - CHRISTIANSEN - ROBERTSON Structural & Civil Engineers

PROJECT THE WORLD TRADE CENTER | TITLE SCHEDULE FOR DETAIL 273 A, B | DATE 10-2-67

REVISIONS

	273 A	273 B				
PLATES						
P	10"x 1"	10"x 1"				
Q	1"	1"				
R	3/8"	3/8"				
S	3/8"	3/8"				
T	3/8"	3/8"				
U	3/8"	3/8"				
BOLTS						
K	4 - 3/4" ϕ	4 - 3/4" ϕ				
L	4 - 3/4" ϕ	4 - 3/4" ϕ				
M	4 - 3/4" ϕ	4 - 7/8" ϕ				
DIMENSIONS						
A	1'-7"	1'-7"				
B	0'-8"	0'-8"				
WELDS						
①	5/16	5/16				
②	5/16	5/16				
③	5/16	5/16				

LICENSED PROFESSIONAL ENG'NEER LESLIE E. ROBERTSON No. 34360 STATE OF NEW YORK

6-ABI-78.1

WORTHINGTON, SKILLING, HELLE & JACKSON — Civil & Structural Engineers

PROJECT: THE WORLD TRADE CENTER | TITLE: CONNECTION DETAIL [illegible] | DATE: [illegible]-67

REVISIONS

7-28-67
9-15-67
11-14-67

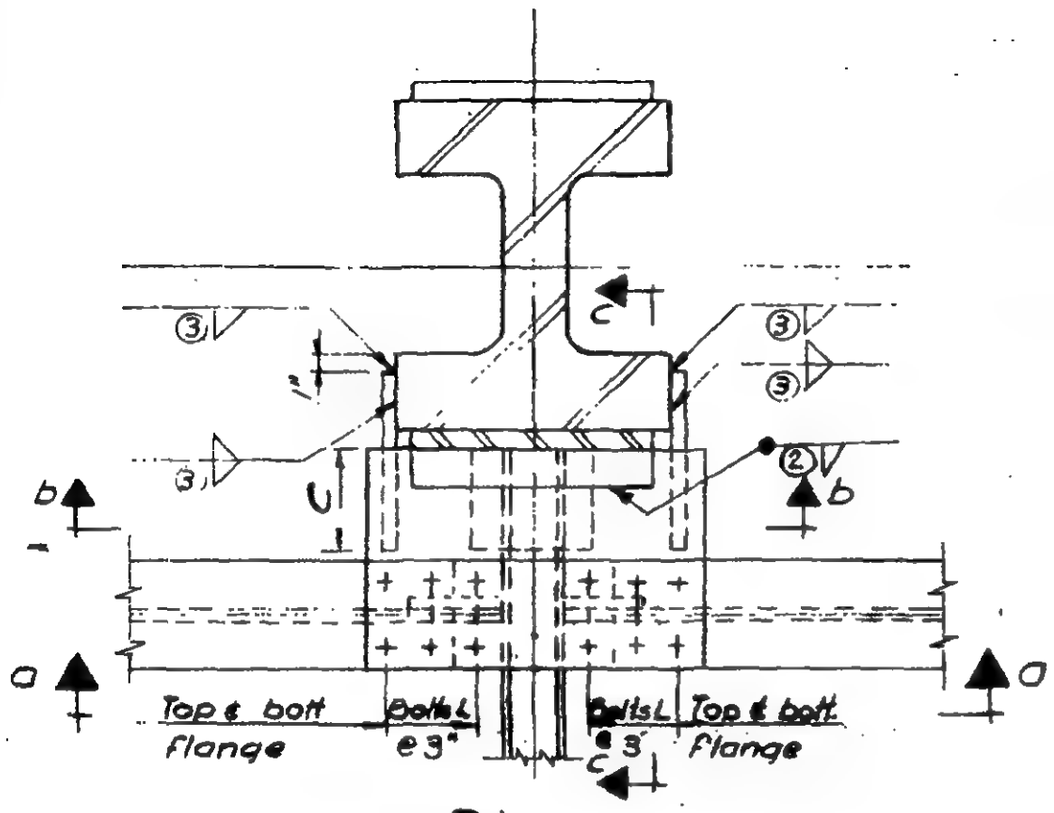

Plan

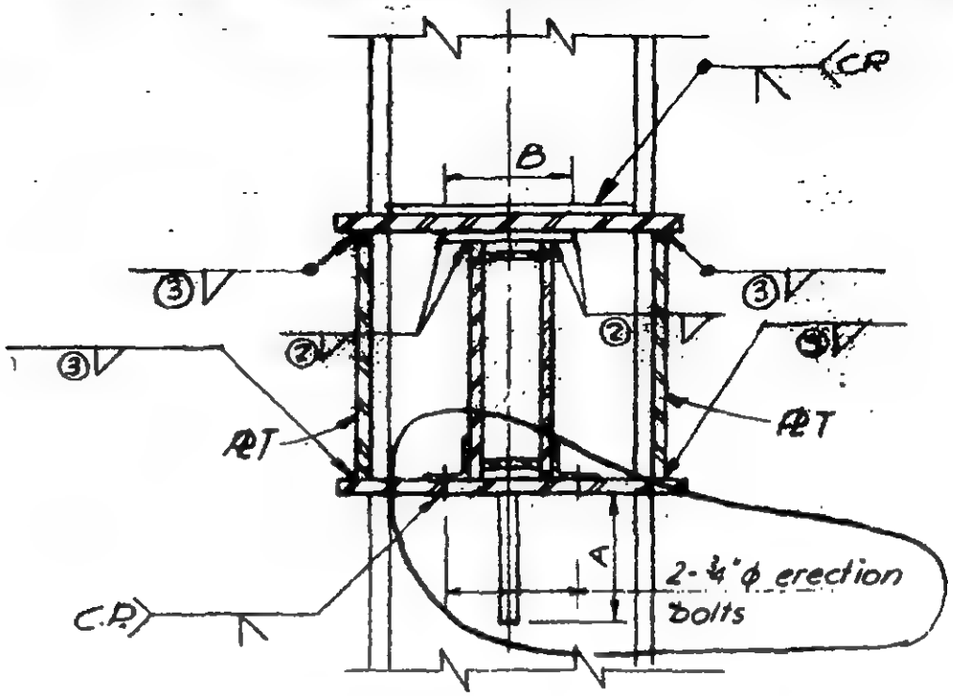

Section b-b

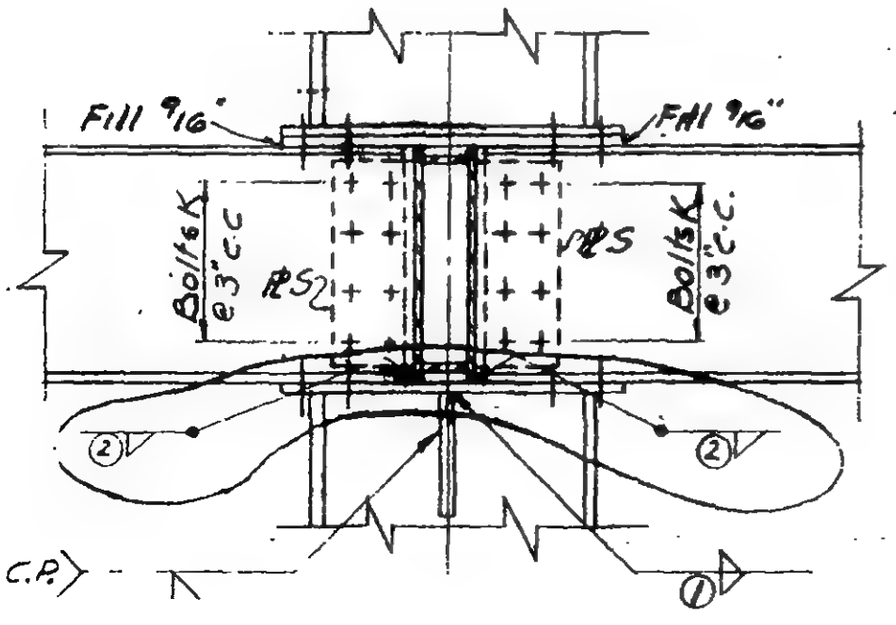

Section a-a

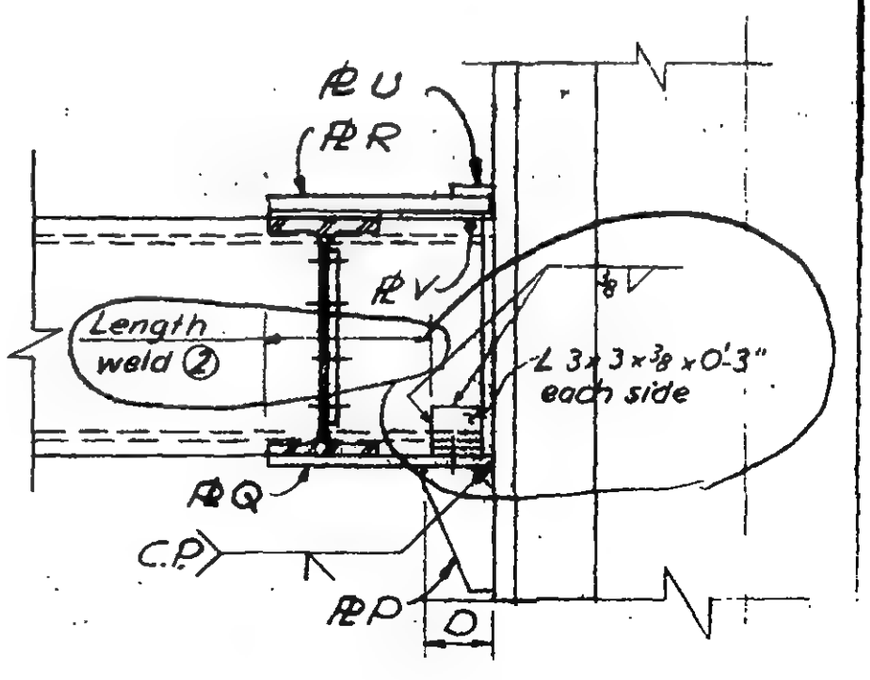

Section c-c

6-AB1-81

WORTHINGTON, SKILLING, HELLE & JACKSON — Civil & Structural Engineers

PROJECT	TITLE	DATE
THE WORLD TRADE CENTER	CONNECTION DETAIL 274A (ALT.)	5-9-67

REVISIONS
7-28-67
9-15-67
10-11-67

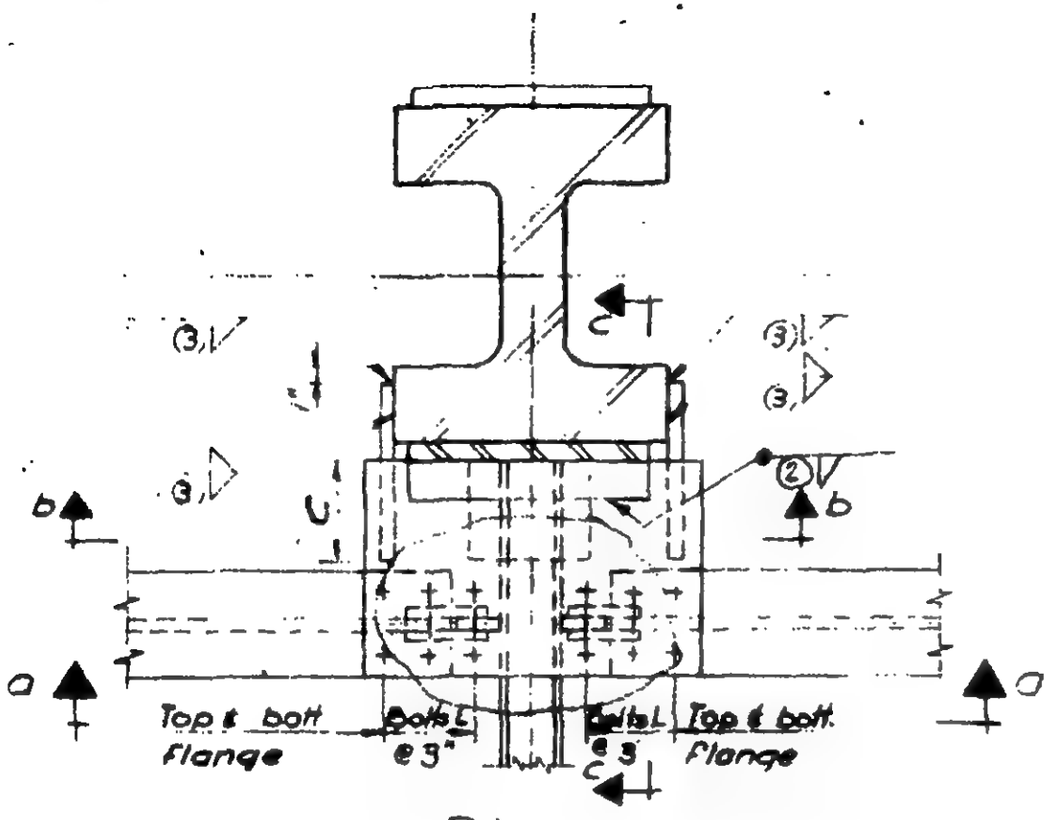

Plan

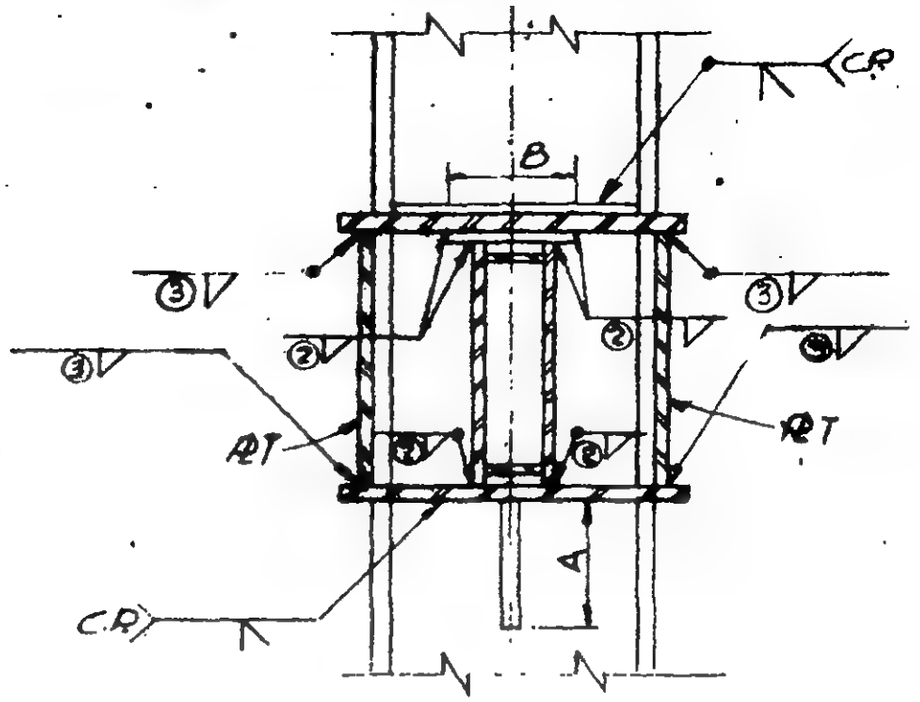

Section b-b

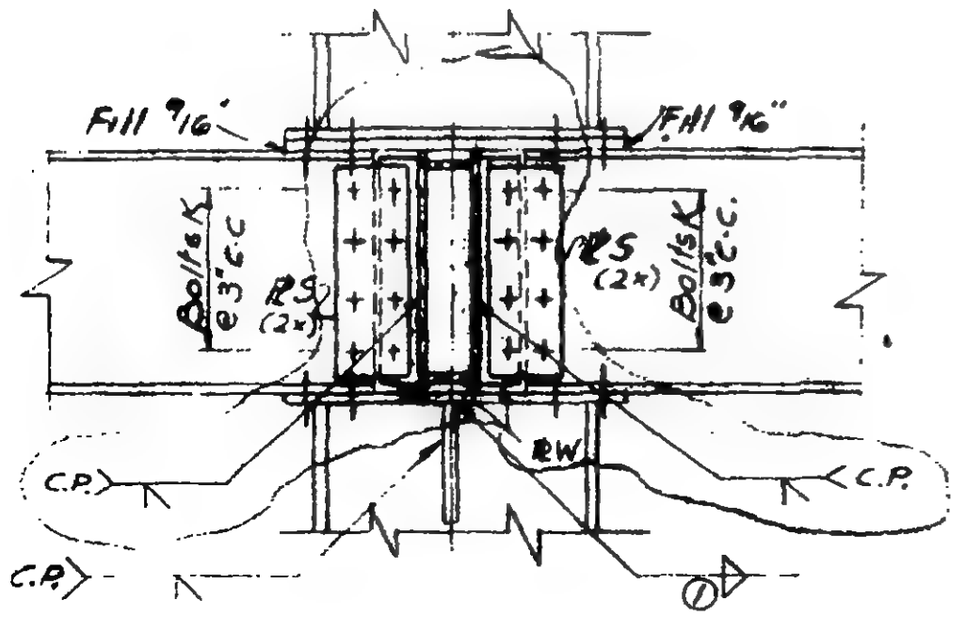

Section a-a

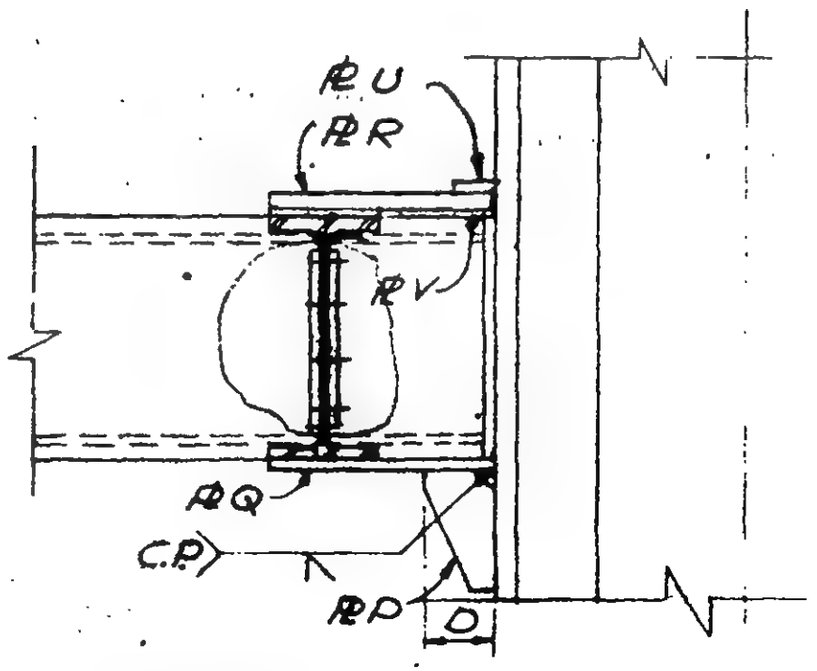

Section c-c

G-AB1-81 ALT.

WORTHINGTON, SKILLING, HELLE & JACKSON — Civil & Structural Engineers

PROJECT: THE WORLD TRADE CENTER | TITLE: CONNECTION DETAIL 274 A | DATE: 5-9-67

REVISIONS
7-28-67
9-15-67
11-14-67
12-7-67

Note: Use Alt. for all locations which do not have shop drawing approved for fabrication.

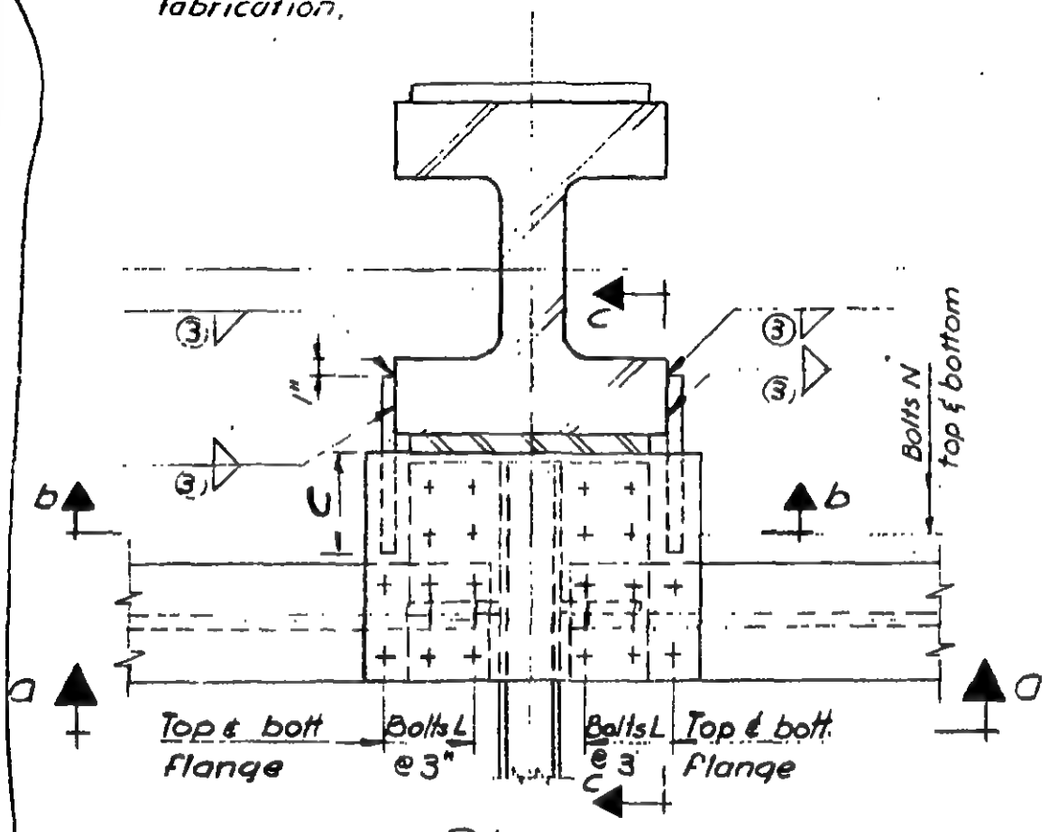

Plan

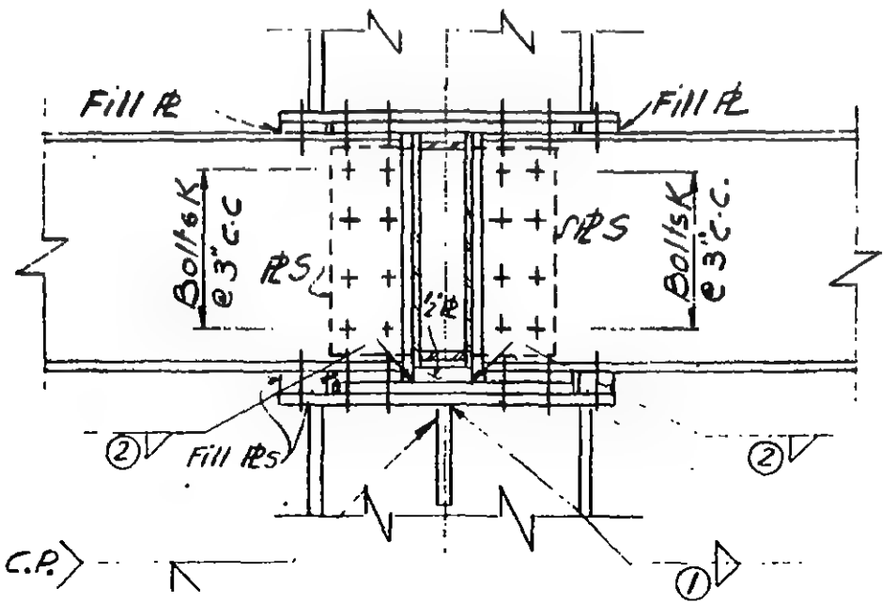

Section a-a

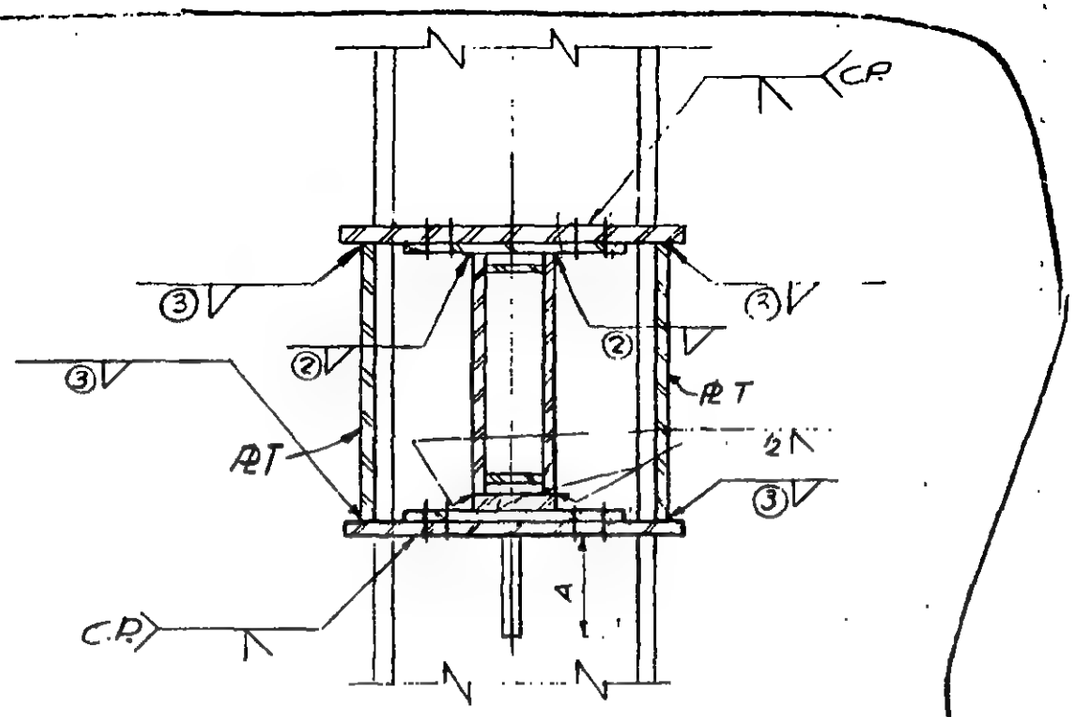

Section b-b

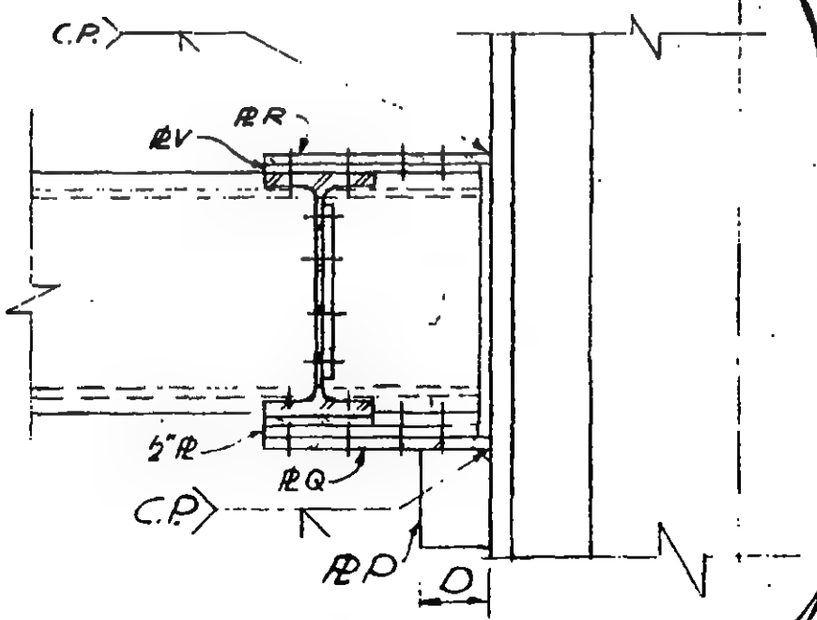

Section c-c

G-AB1-81 Alt.

WORTHINGTON, SKILLING, HELLE & JACKSON — Civil & Structural Engineers

PROJECT THE WORLD TRADE CENTER | TITLE CONNECTION DETAIL 274 A (ALT 3) | DATE [illegible]

REVISIONS
7-28-67
9-15-67
11-14-67
12-7-67
2-26-68

Note: Use Alt. for all locations which do not have shop drawing approved for fabrication.

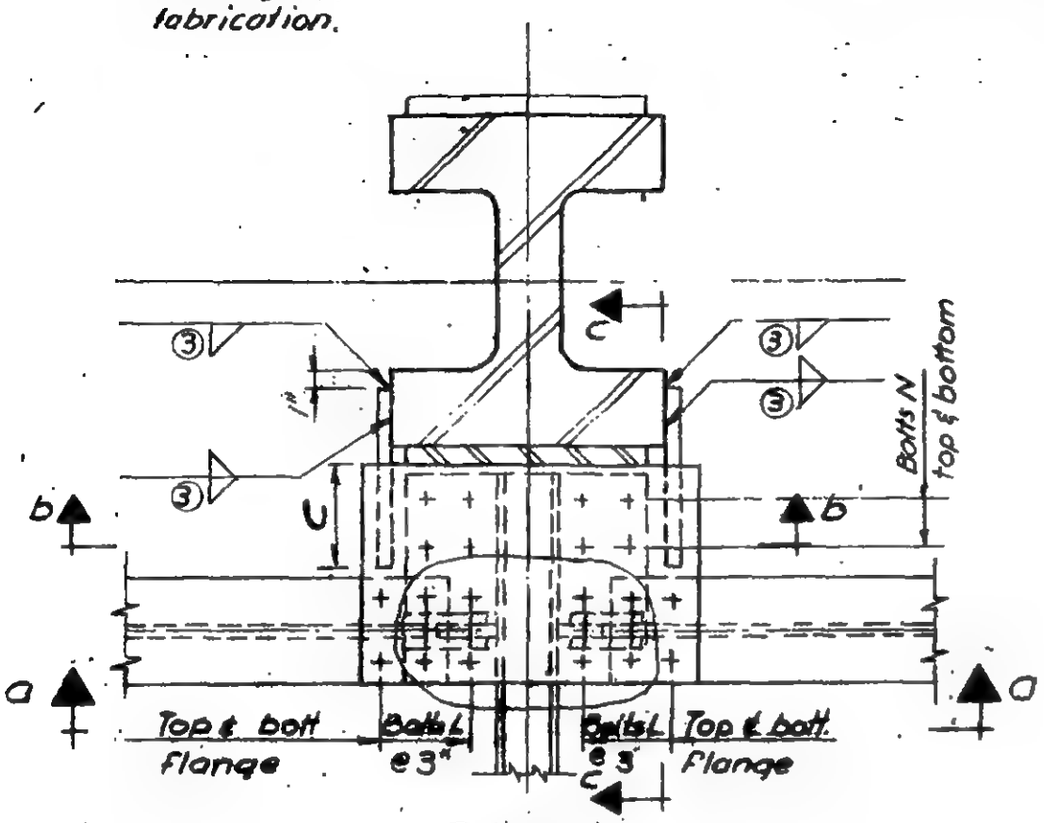

Plan

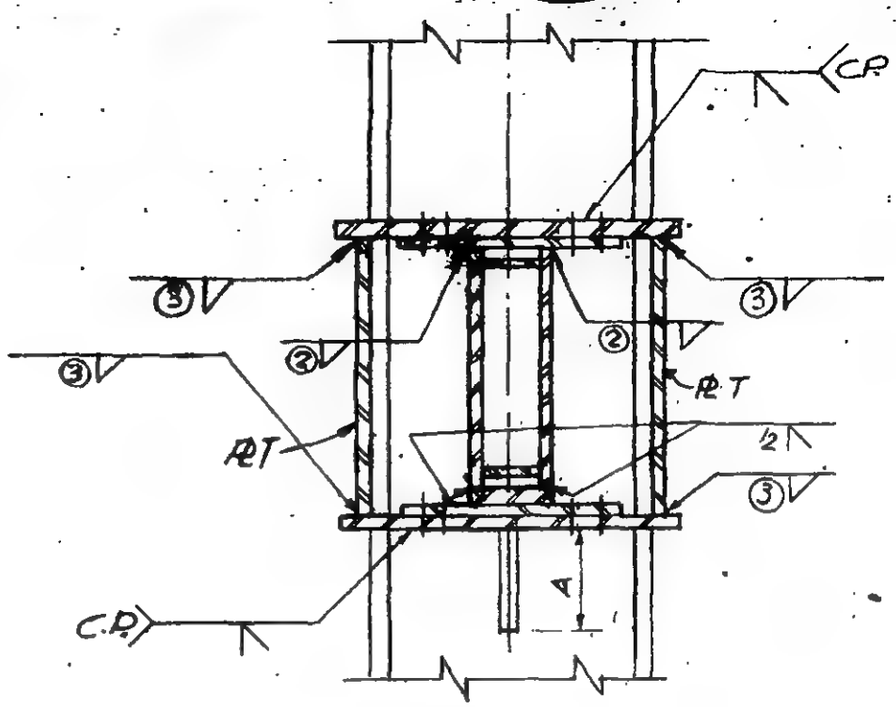

Section b-b

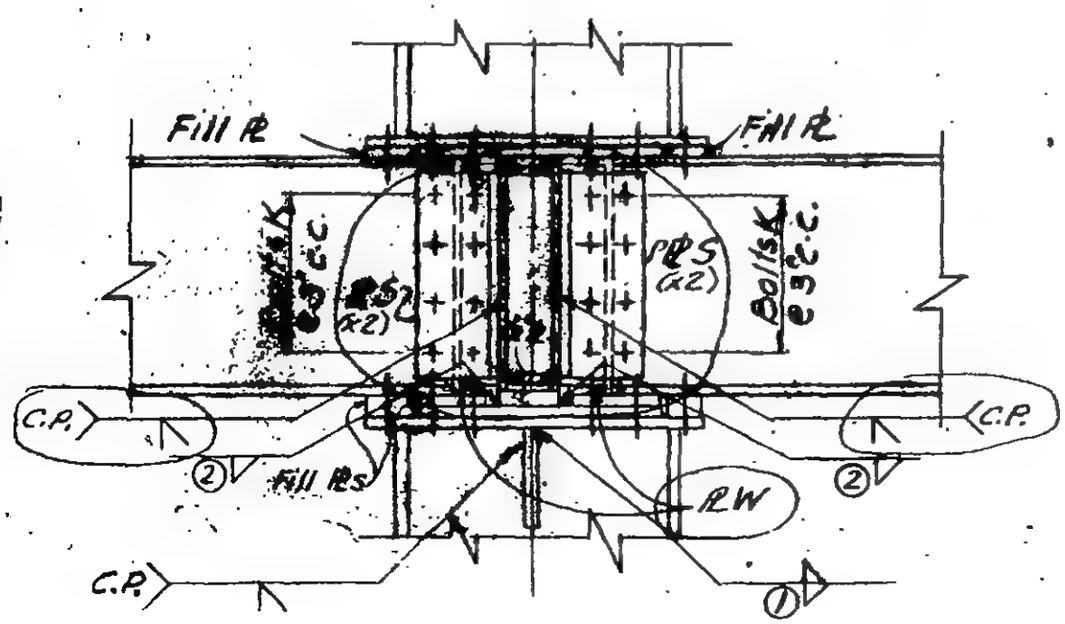

Section a-a

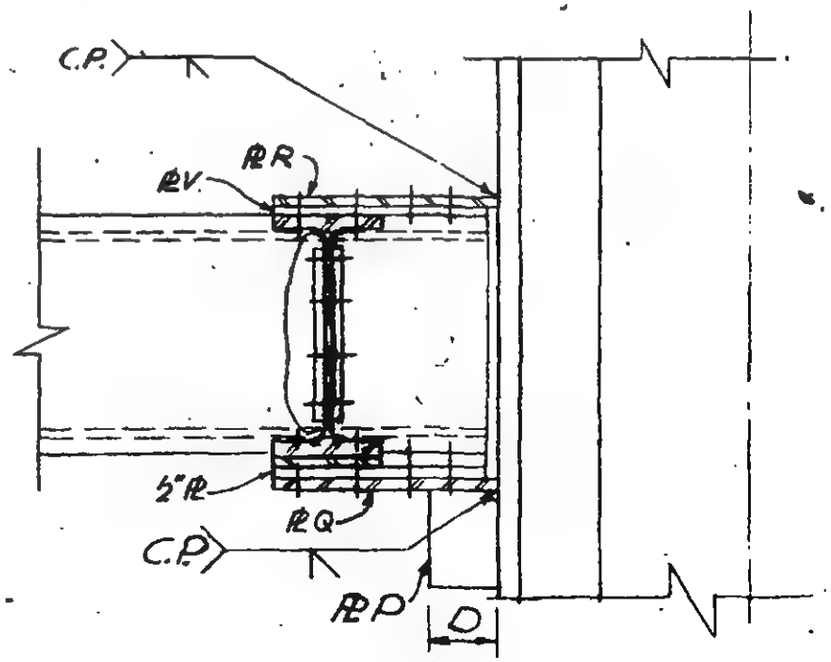

Section c-c

G-AB1-8 (AH.5)

SKILLING - HELLE - CHRISTIANSEN - ROBERTSON Structural & Civil Engineers

PROJECT THE WORLD TRADE CENTER | TITLE SCHEDULE FOR DETAIL 274 A, B, C, D | DATE 7-28-67

REVISIONS
9-15-67
10-5-67
12-7-67

REF. DWG.	6-AB1-81	6-AB1-81.2	6-AB1-81.2	6-AB1-81.2		
	274 A	274 B	274 C	274 D		
PLATES						
P	5/8"	3/4"	5/8"	5/8"		
Q	5/8"	5/8"	1/2"	1/2"		
R	5/8"	5/8"	1/2"	1/2"		
S	9/16"	1/2"	1/2"	1/2"		
T	11/16"	—	—	—		
U	2" x 5/8"	—	—	—		
V	1/2"	1/2"	7/16"	7/16		
DIMENSIONS						
A	1'-0"	1'-3"	1'-0"	1'-2"		
B	0'-8"	—	—	—		
C	0'-7 1/2"	—	—	—		
D	0'-6"	0'-7"	—	—		
BOLTS						
K	8-3/4"ϕ	8-3/4"ϕ	8-3/4"ϕ	8-3/4"ϕ		
L	6-1/8"ϕ	6-7/8"ϕ	6-7/8"ϕ	6-7/8"ϕ		
M	—	4-3/4"ϕ	6-3/4"ϕ	6-3/4"ϕ		
N	8-7/8"ϕ	—	—	—		
WELDS						
①	5/16	5/16	5/16	5/16		
②	1/2	5/16	5/16	5/16		
③	5/8	—	—	—		

LICENSED LESLIE E. ROBERTSON ENGINEER No. 34360 UNIVERSITY OF THE STATE OF NEW YORK

G-AB1-81.1

SKILLING - HELLE - CHRISTIANSEN - ROBERTSON Structural & Civil Engineers

PROJECT THE WORLD TRADE CENTER | TITLE SCHEDULE FOR DETAIL 274 A,B (ALT.) | DATE 7-28-67

REVISIONS

9-15-67
10-11-67

REF. DWG.	G-AB1-E1	G-AB1-E1.2	G-AB1-B1,A1.			
	274 A	274 B	*Alt. 274 A			*Use at following column TOWER A
PLATES						Floor / Column
P	5/8"	3/4"	5/8"			10,11 / 702
Q	5/8"	5/8"	5/8"			10,11 / 707
R	5/8"	5/8"	5/8"			12-16 / 702
S	3/8"	1/2"	3/8"			12-16 / 707
T	11/16"		11/16"			17 / 702
U	2 x 5/8"	----	2 x 5/8"			17 / 707
V	1/2"	1/2"	1/2"			18 / 702
W	—	—	Same as web thickness of beam			19 / 702
DIMENSIONS						20 / 702
A	1'-0"	1'-3"	1'-0"			21-23 / 702
B	0'-8"	—	0'-8"			24 / 702
C	0'-7 1/2"		0'-7 1/2"			25 / 702
D	0'-6"	0'-7"	0'-6"			26 / 702
						27 / 702
						28-31 / 702
BOLTS						32 / 702
K	8 - 3/4 ϕ	8 - 3/4 ϕ	4 - 3/4" ϕ			33 / 702
L	6 - 1 1/8" ϕ	6 - 7/8 ϕ	6 - 1 1/8" ϕ			
M	—	4 - 3/4 ϕ	—			
WELDS						
1	5/16	5/16	5/16			
2	1/2	5/16	1/2			
3	5/8	—	5/8			

G-AB1-81.1 ALT.

SKILLING - HELLE - CHRISTIANSEN - ROBERTSON Structural & Civil Engineers

PROJECT THE WORLD TRADE CENTER | TITLE SCHEDULE FOR DETAIL 274 A, B, C, D (A/ALT.5) | DATE 7-28-67

REVISIONS
9-15-67
10-5-67
12-7-67
2-26-68

REF. DWG.	6-AB1-81	6-AB1-81.2	6-AB1-81.2	6-AB1-81.2	6-AB1-81(Alt.5)
	274 A	274 B	274 C	274 D	274A (Alt.5)
PLATES					
P	5/8"	3/4"	5/8"	5/8"	5/8"
Q	5/8"	5/8"	1/2"	1/2"	5/8"
R	5/8"	5/8"	1/2"	1/2"	5/8"
S	9/16"	1/2"	1/2"	1/2"	9/16"
T	11/16"	—	—	—	11/16"
U	2" x 5/8"	—	—	—	2" x 5/8"
V	1/2"	1/2"	7/16"	7/16	1/2"
(W)	—	—	—	—	Same as web thickness of beam
DIMENSIONS					
A	1'-0"	1'-3"	1'-0"	1'-2"	1'-0"
B	0'-8"	—	—	—	0'-8"
C	0'-7 1/2"	—	—	—	0'-7 1/2"
D	0'-6"	0'-7"	—	—	0'-6"
BOLTS					
K	8-3/4"ϕ	8-3/4"ϕ	8-3/4"ϕ	8-3/4"ϕ	8-3/4"ϕ
L	6-1/8"ϕ	6-7/8"ϕ	6-7/8"ϕ	6-7/8"ϕ	6-1/8"ϕ
M	—	4-3/4"ϕ	6-3/4"ϕ	6-3/4"ϕ	—
N	8-7/8"ϕ	—	—	—	8-7/8"ϕ
WELDS					
①	5/16	5/16	5/16	5/16	5/16
②	1/2	5/16	5/16	5/16	1/2
③	5/8	—	—	—	5/8

6-AB1-81.1 (Alt.5)

SKILLING -- HELLE -- CHRISTIANSEN -- ROBERTSON Structural & Civil Engineers

PROJECT THE WORLD TRADE CENTER | TITLE CONNECTION DETAIL 274 B, C, D | DATE 9-15-67

REVISIONS
10-5-67

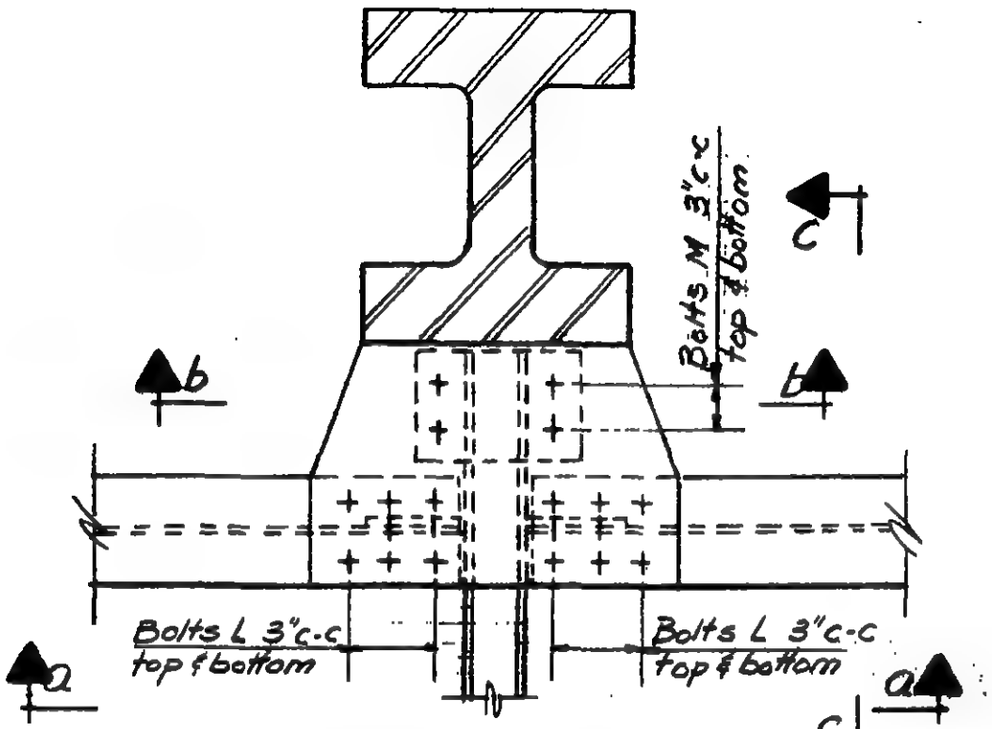

Plan

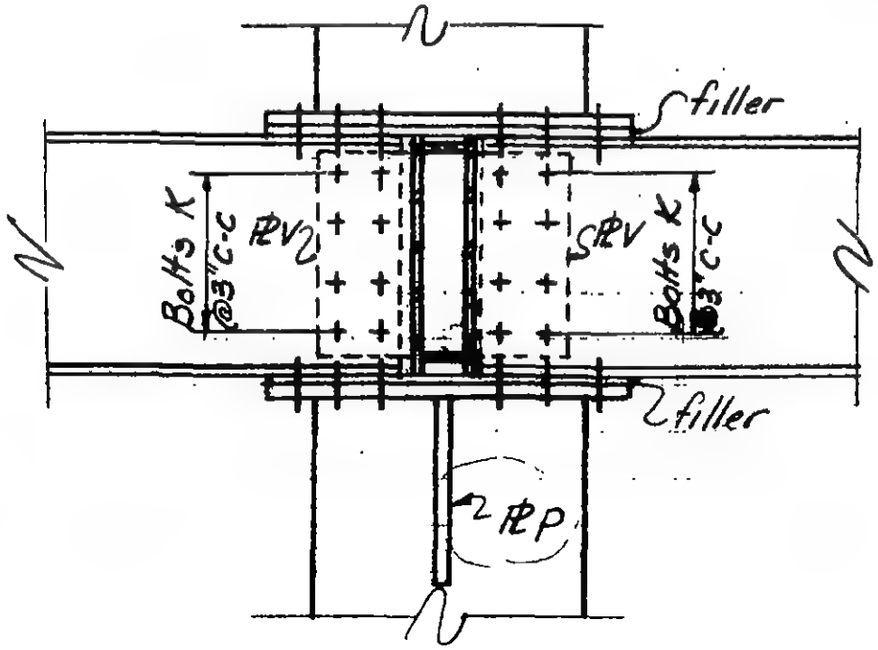

Section a-a

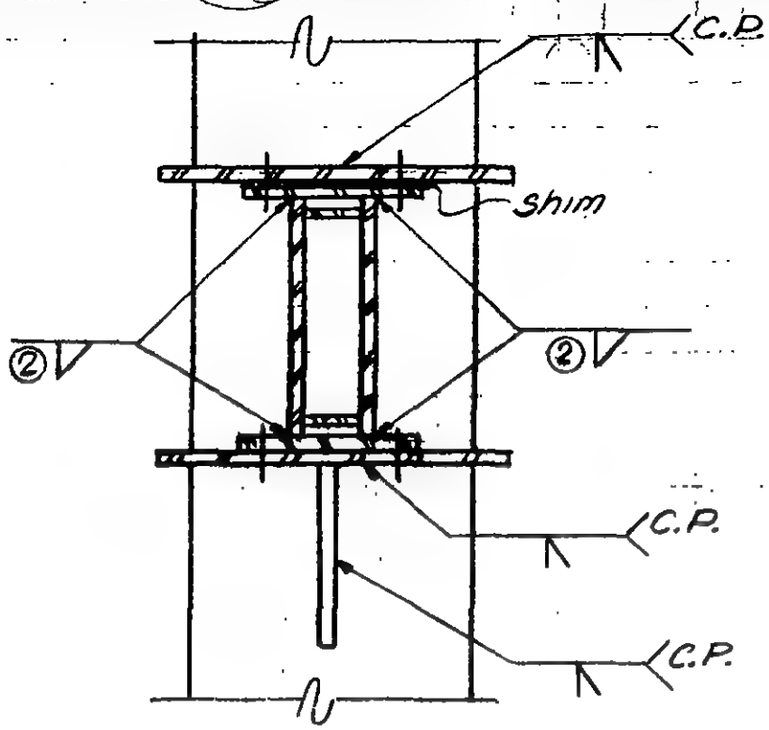

Section b-b

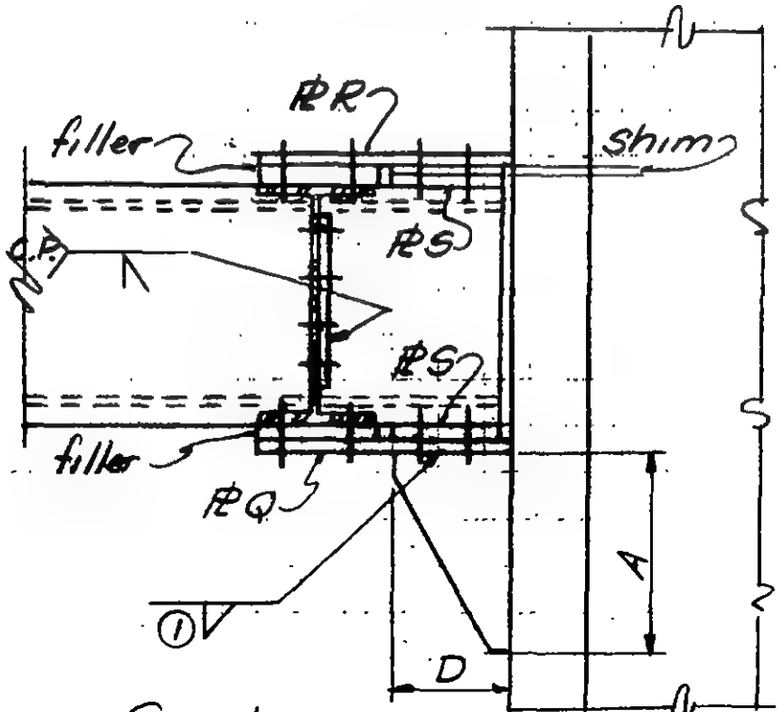

Section c-c

LICENSED PROFESSIONAL ENGINEER
LESLIE E. ROBERTSON
No. 34360
UNIVERSITY OF THE STATE OF NEW YORK

6-AB1-81.2

WORTHINGTON, SKILLING, HELLE & JACKSON — Civil & Structural Engineers

PROJECT: THE WORLD TRADE CENTER | TITLE: CONNECTION DETAIL 275 A | DATE: 5.8.2-68

REVISIONS

10-2-67
1-24-68

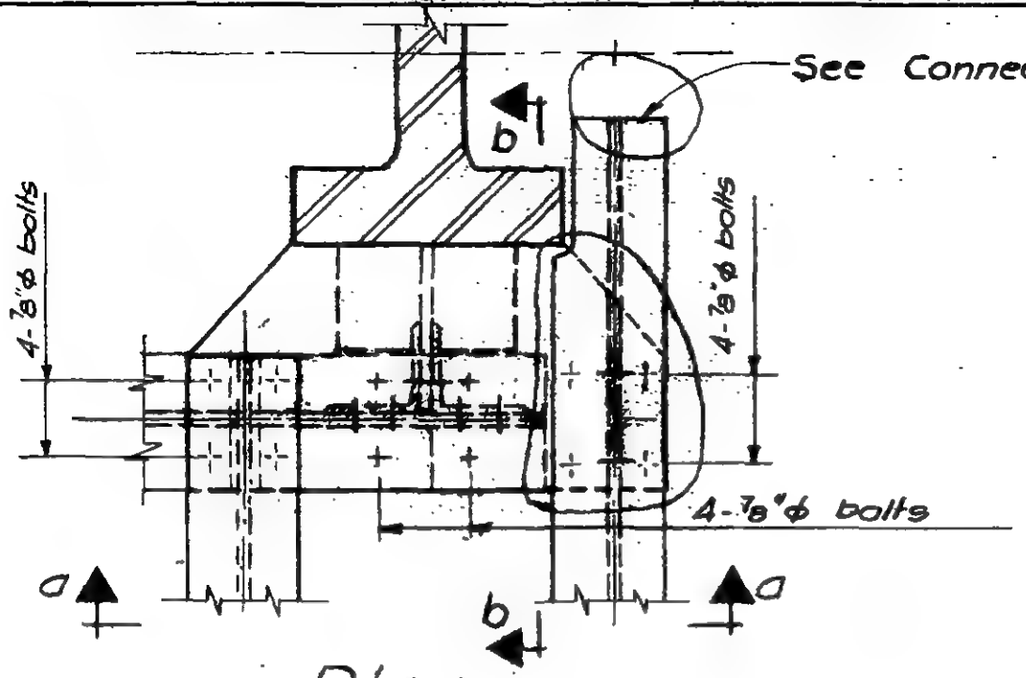

Plan

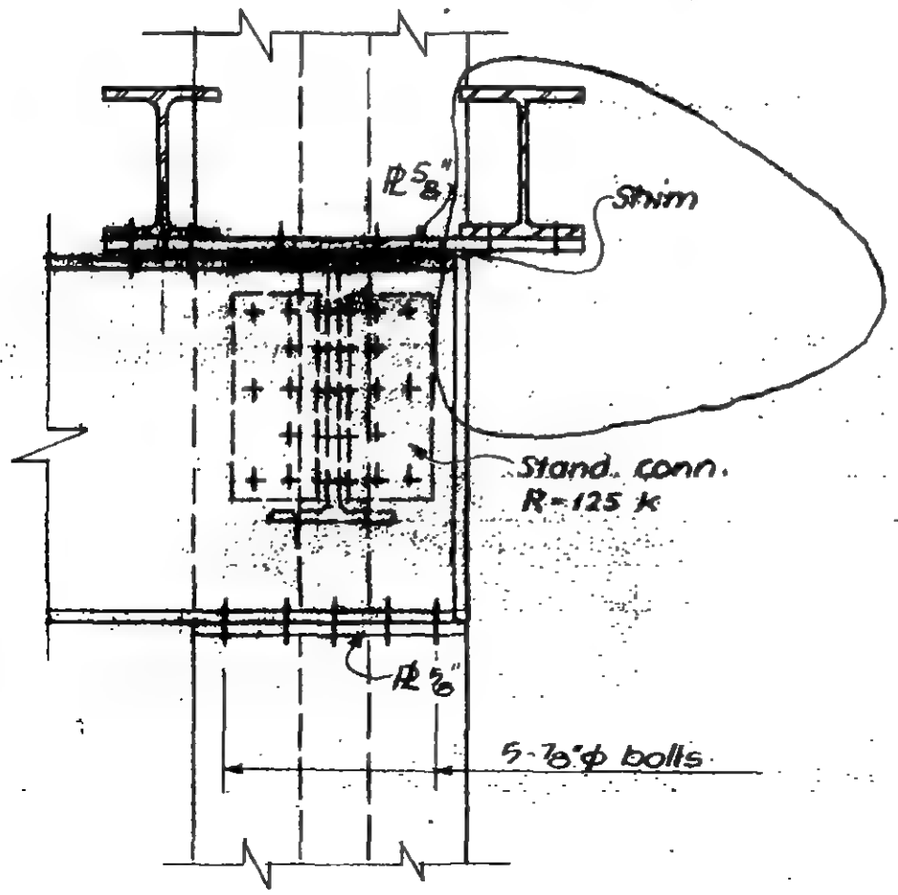

Section a-a

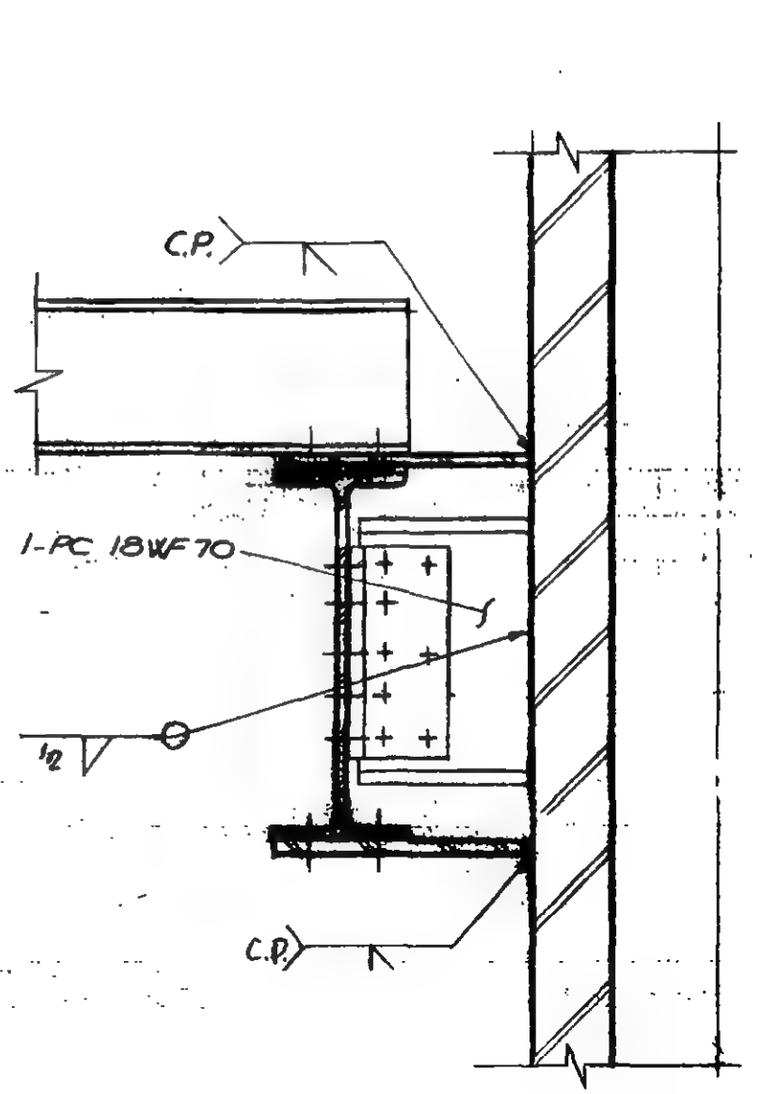

Section b-b

6-ABI-82

LESLIE E. ROBERTSON — No. 34960 — UNIVERSITY OF THE STATE OF NEW YORK

WORTHINGTON, SKILLING, HELLE & JACKSON — Civil & Structural Engineers

PROJECT: THE WORLD TRADE CENTER | TITLE: CONNECTION DETAIL 276 A, | DATE: 6-5-67

REVISIONS
9-15-67
11-10-67

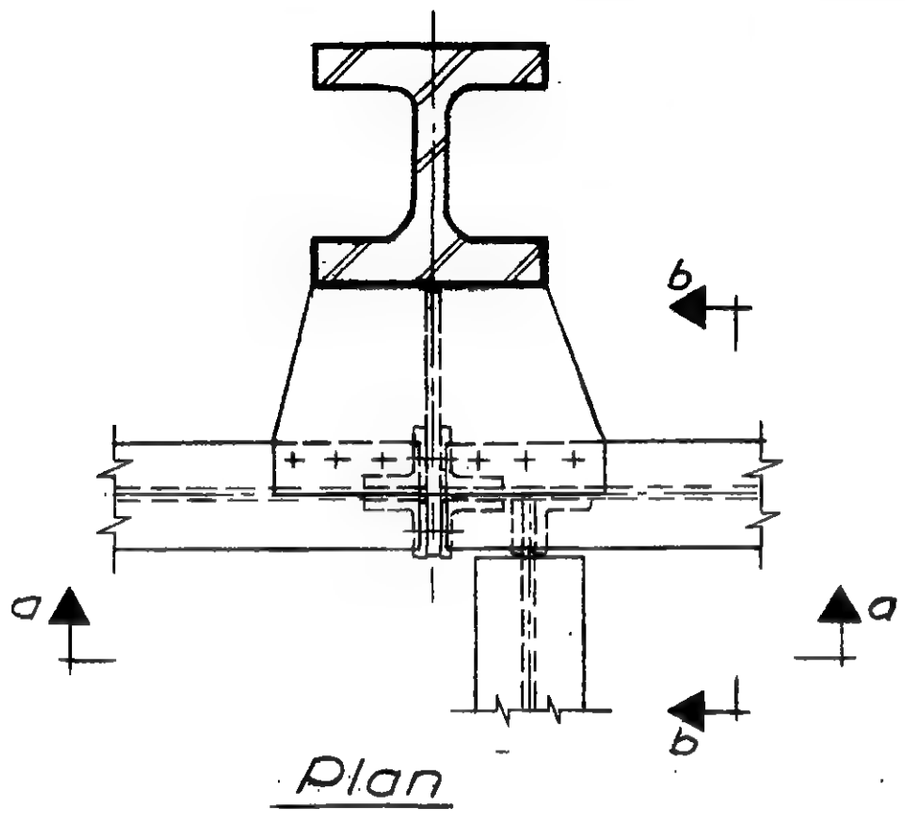

Plan

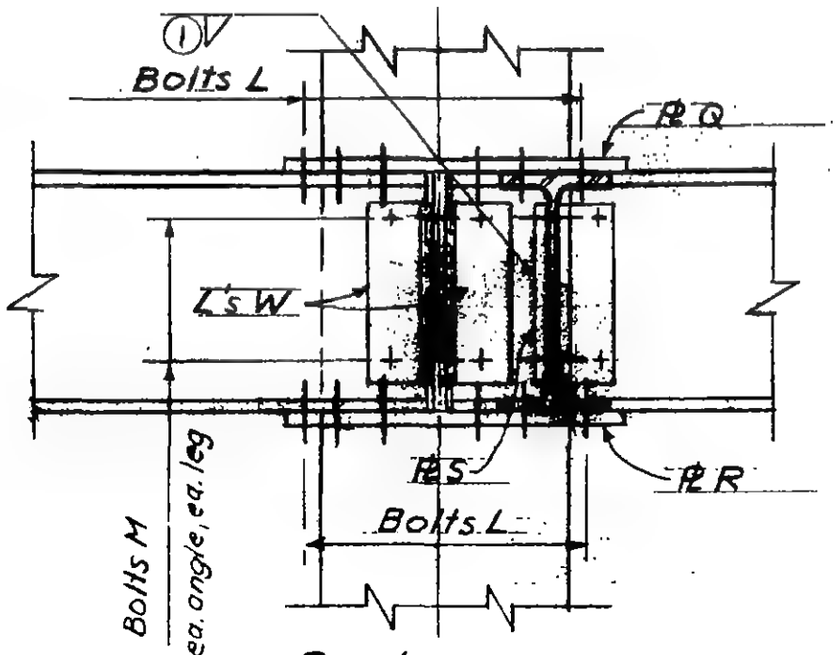

Section a-a

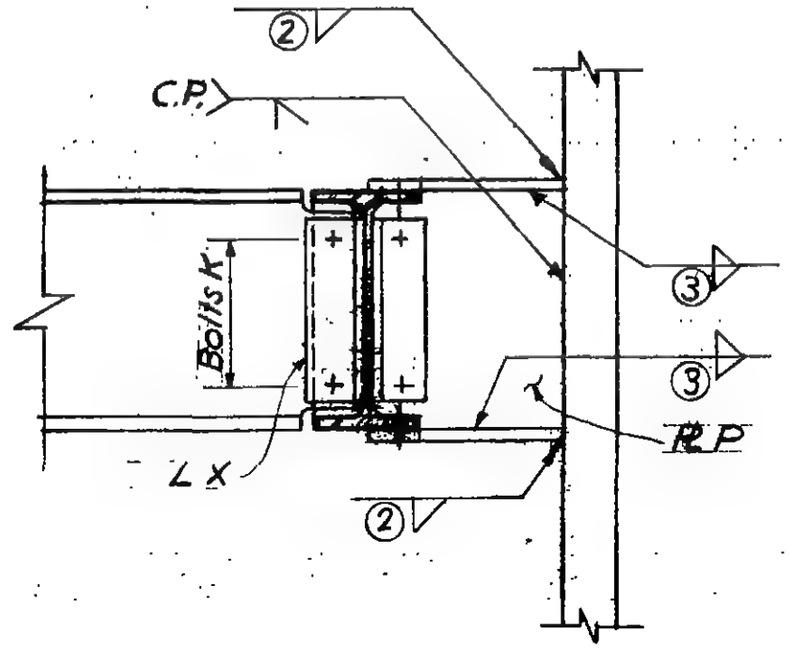

Section b-b

LICENSED PROFESSIONAL ENGINEER
LESLIE E. ROBERTSON
No. 34360
UNIVERSITY OF THE STATE OF NEW YORK

6-AB1-83

WORTHINGTON, SKILLING, HELLE & JACKSON — Civil & Structural Engineers

PROJECT THE WORLD TRADE CENTER | TITLE CONNECTION DETAIL 276 A (ALT.1) | DATE 6-5-67

REVISIONS
9-15-67
11-10-67
2-26-68

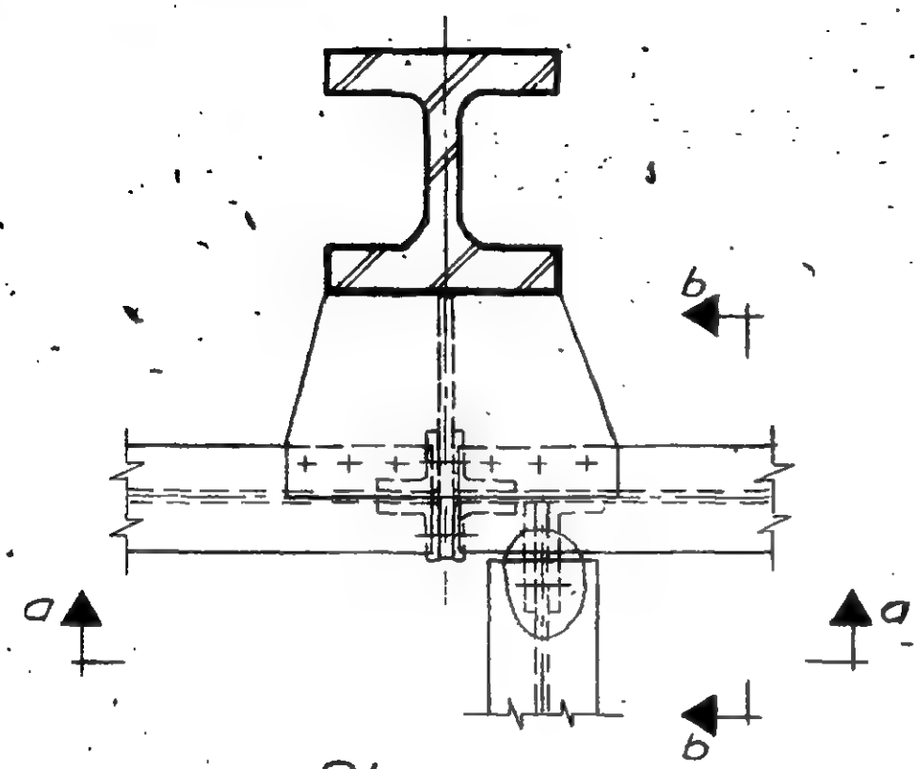

Plan

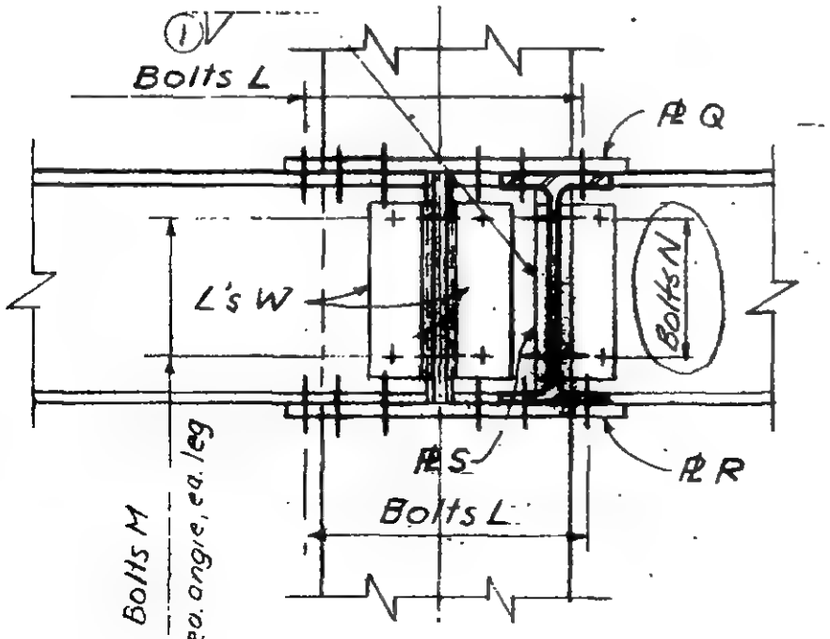

Section a-a

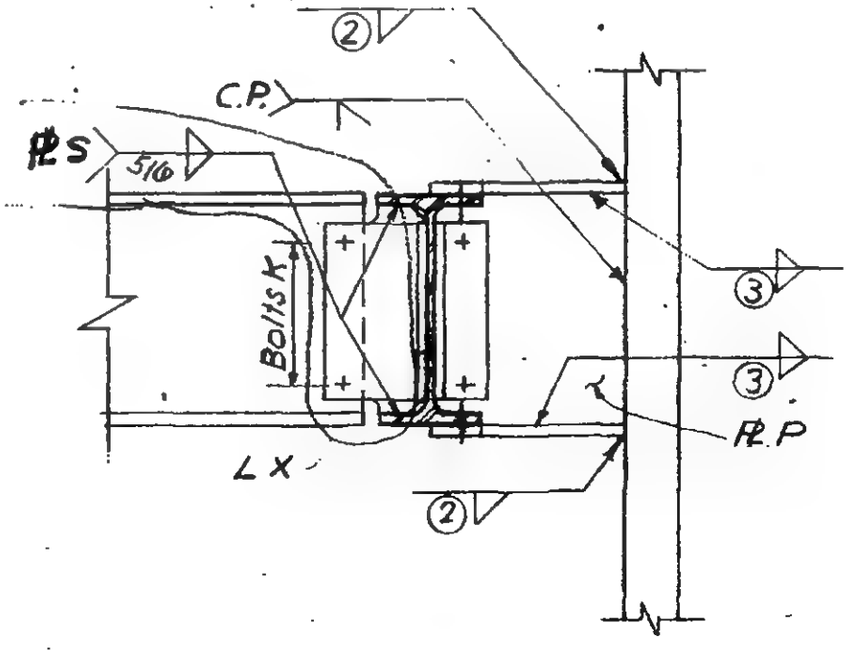

Section b-b

LICENSED PROFESSIONAL ENGINEER
LESLIE E. ROBERTSON
No. 34360
UNIVERSITY OF THE STATE OF NEW YORK

G-AB1-83 (ALT.1)

SKILLING - HELLE - CHRISTIANSEN - ROBERTSON Structural & Civil Engineers

PROJECT THE WORLD TRADE CENTER | TITLE SCHEDULE FOR DETAIL 276A | DATE 9-15-67

REVISIONS

11-10-67

	276A
PLATES	
P	1"
Q	1/2"
R	1/2"
S	3/8"
ANGLES	
W	4 x 3 1/2 x 3/8
X	4 x 3 1/2 x 5/16
BOLTS	
K	3 - 3/4" ϕ
L	6 - 1" ϕ
M	4 - 7/8" ϕ
WELDS	
①	5/16
②	1/2
③	7/16

LICENSED PROFESSIONAL ENGINEER
LESLIE E. ROBERTSON
No. 34360
UNIVERSITY OF THE STATE OF NEW YORK

G-AB1-83.1

SKILLING - HELLE - CHRISTIANSEN - ROBERTSON Structural & Civil Engineers

PROJECT THE WORLD TRADE CENTER | TITLE SCHEDULE FOR DETAIL 276 A, A(ALT.1) | DATE 9-15-67

REVISIONS
11-10-67
2-26-68

	276 A	276 A (Alt.1)
PLATES		
P	1"	1"
Q	1/2"	1/2"
R	1/2"	1/2"
S	3/8"	1/2"
ANGLES		
W	4 x 3 2 x 3/8	4 x 3 1/2 x 3/8
X	4 x 3 2 x 5/16	8 x 4 x 1/2
BOLTS		
K	3 - 3/4" ϕ	4 - 7/8" ϕ
L	6 - 1" ϕ	6 - 1" ϕ
M	4 - 7/8" ϕ	4 - 7/8" ϕ
N	——	4 - 3/4" ϕ
WELDS		
1	5/16	5/16
2	1/2	1/2
3	7/16	7/16

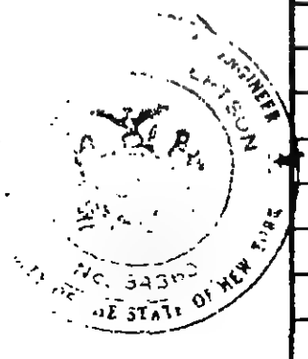

6-AE1-83.1(Alt.1)

SKILLING - HELLE - CHRISTIANSEN - ROBERTSON Structural & Civil Engineers

PROJECT	TITLE	DATE
THE WORLD TRADE CENTER	CONNECTION DETAIL 276 B	2-9-68

REVISIONS

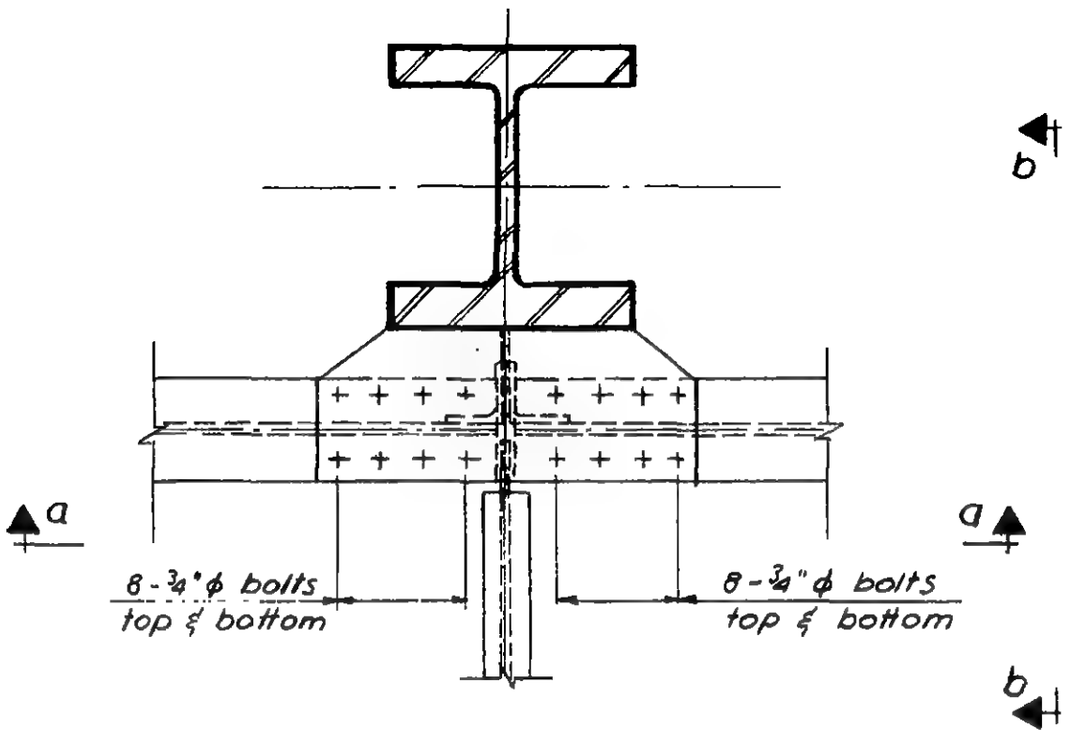

Plan

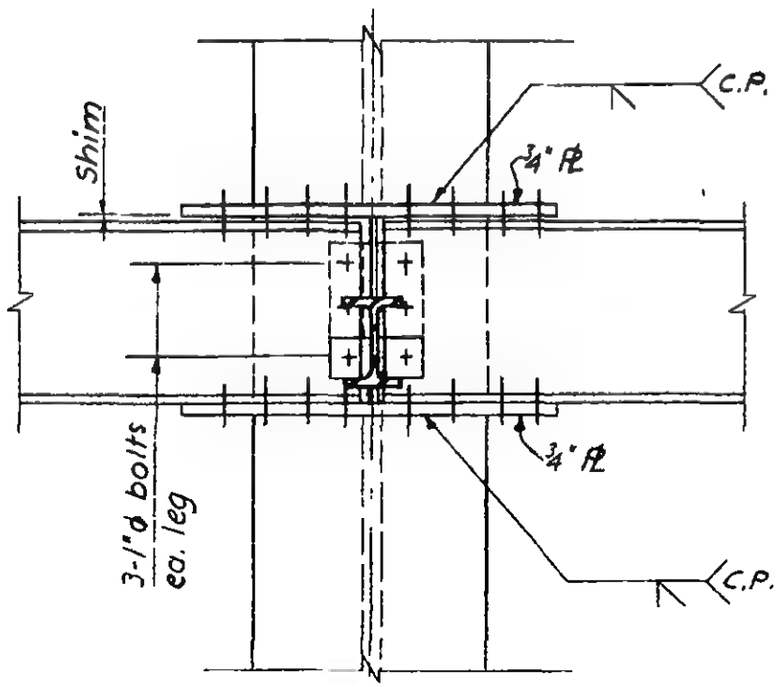

Section a-a

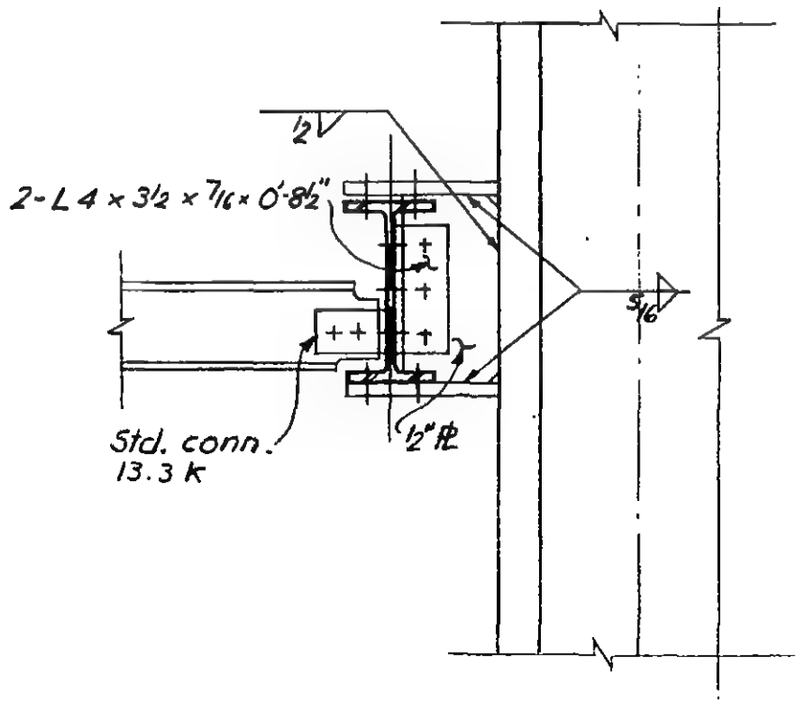

Section b-b

LICENSED PROFESSIONAL ENGINEER
LESLIE E. ROBERTSON
No. 34360
UNIVERSITY OF THE STATE OF NEW YORK

6 - AB1 - 83.2

SKILLING - HELLE - CHRISTIANSEN - ROBERTSON Structural & Civil Engineers

PROJECT THE WORLD TRADE CENTER | TITLE CONNECTION DETAIL 277 A | DATE 7-20-67

REVISIONS

10-5-67

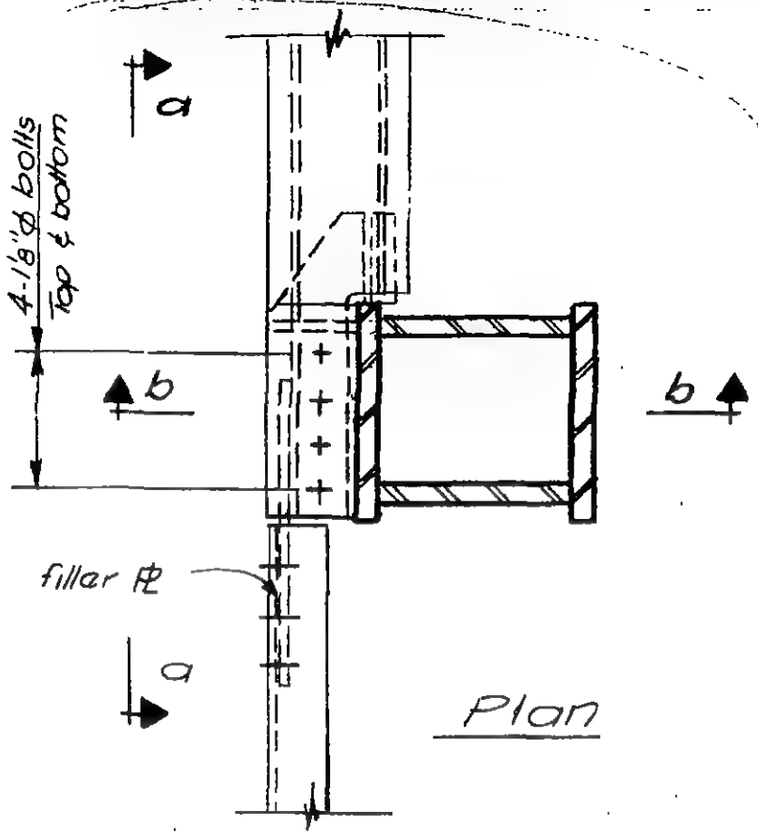

Plan

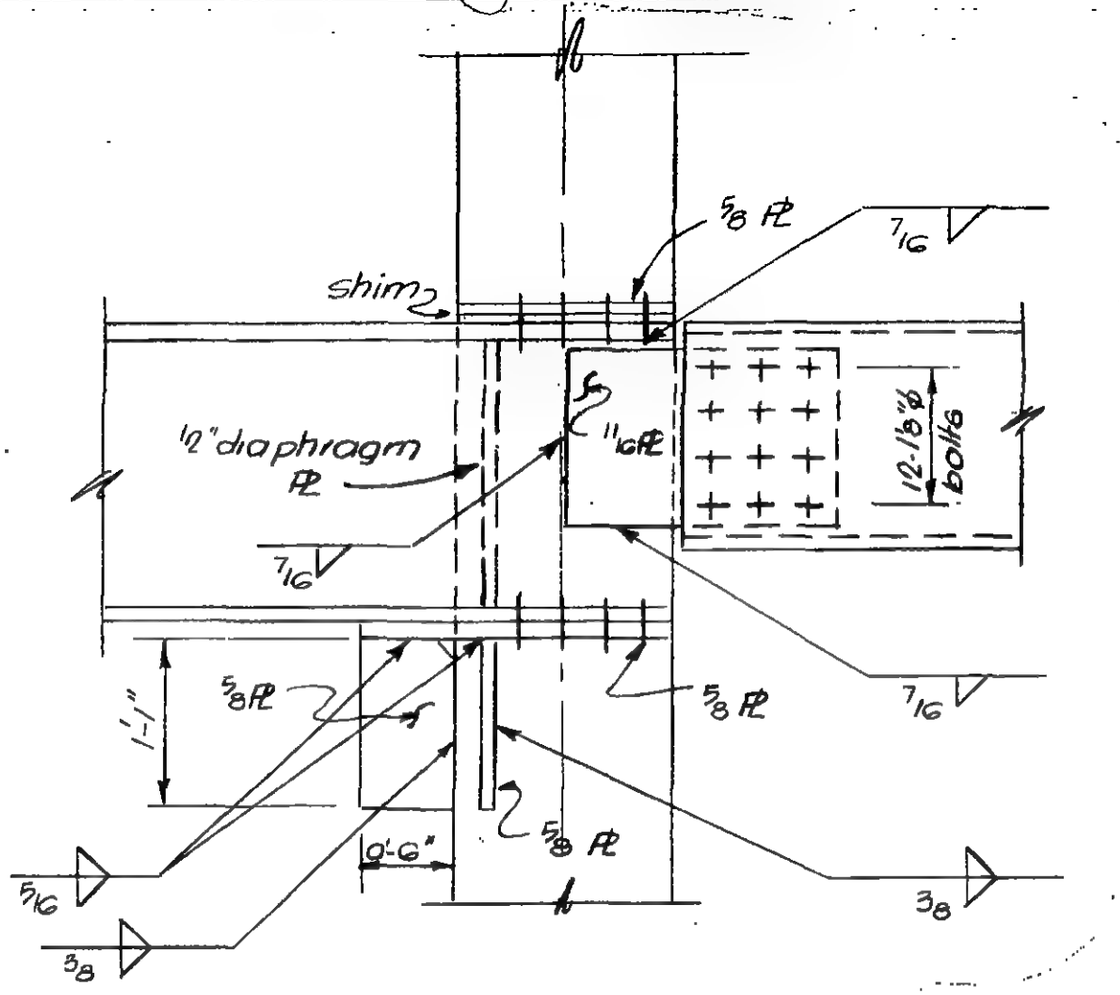

Section a-a

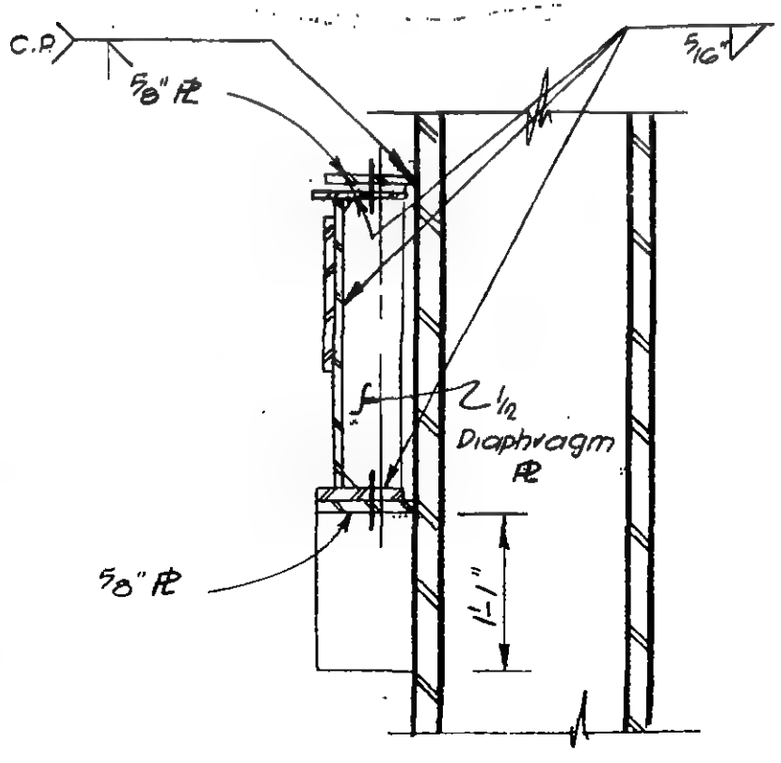

Section b-b

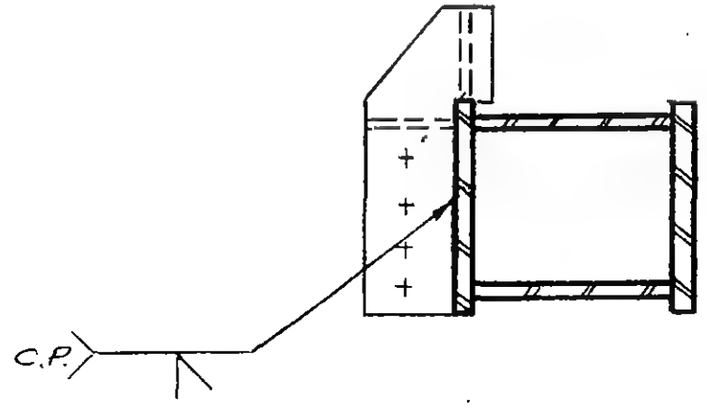

Seat Pl detail.

LICENSED PROFESSIONAL ENGINEER
LESLIE E. ROBERTSON
No. 34360
UNIVERSITY OF THE STATE OF NEW YORK

6-ABI-84

WORTHINGTON, SKILLING, HELLE & JACKSON — Civil & Structural Engineers

PROJECT: THE WORLD TRADE CENTER | TITLE: CONNECTION DETAIL 278 A | DATE: 5-1-67

REVISIONS
7-28-67
6-24-68

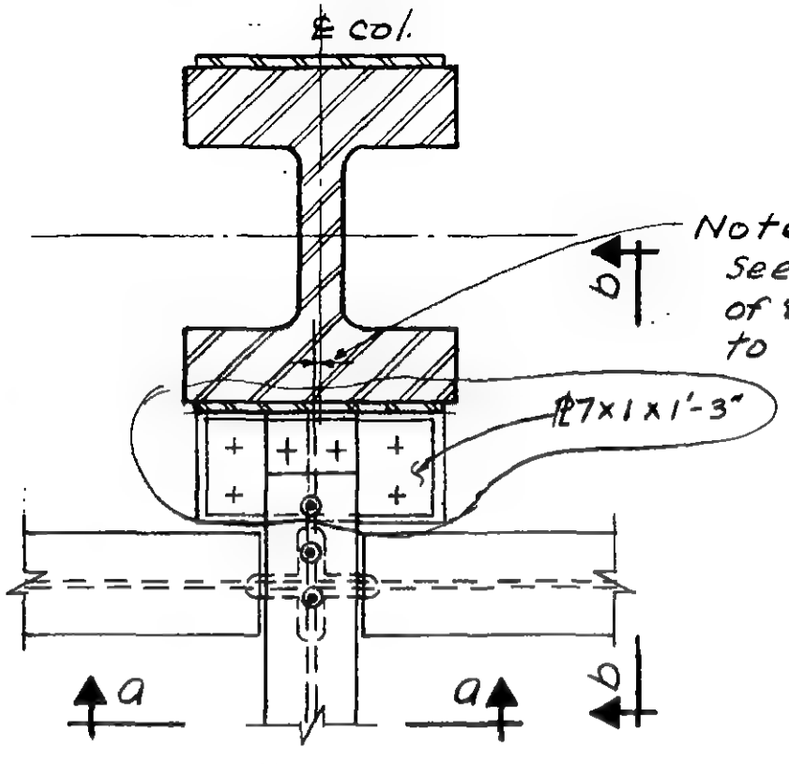

PLAN

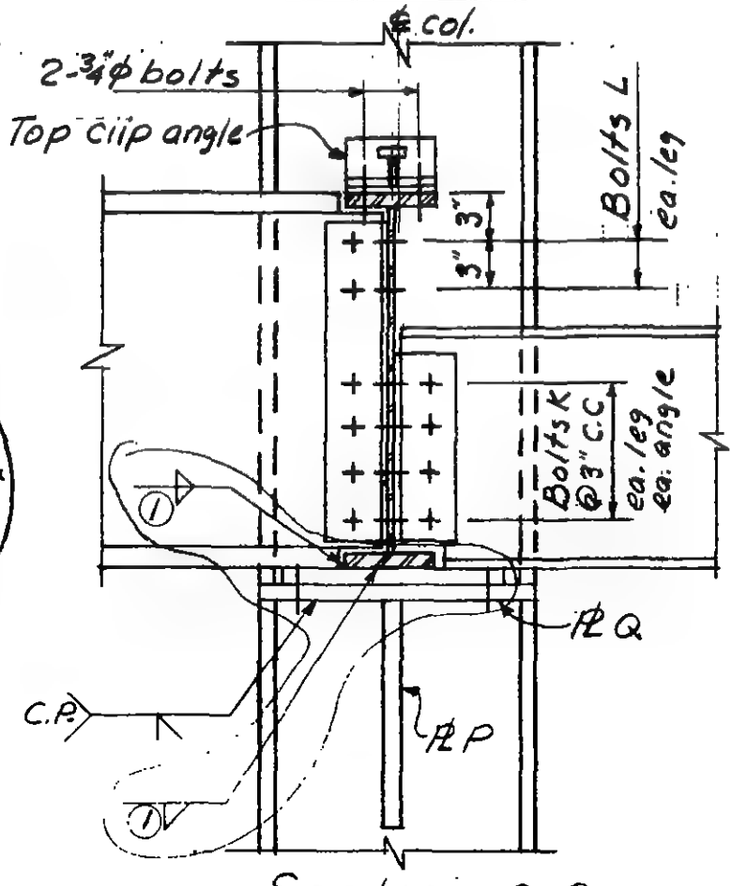

Section a-a

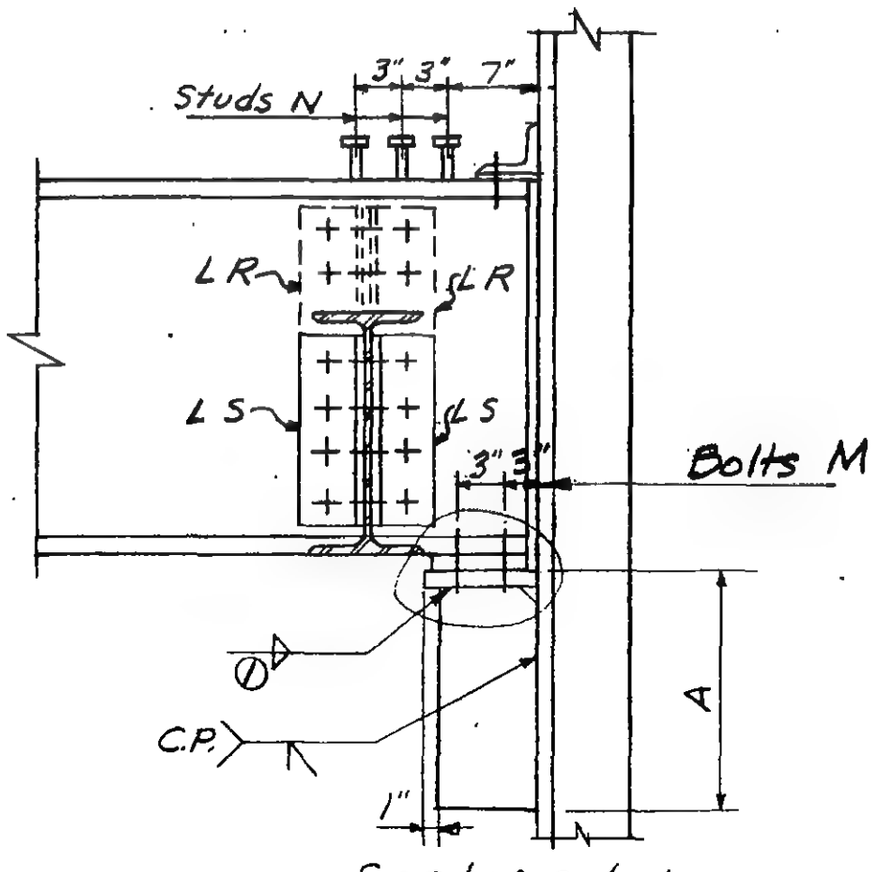

Section b-b

6-AB1-85

LICENSED PROFESSIONAL ENGINEER
LESLIE E. ROBERTSON
No. 24360
UNIVERSITY OF THE STATE OF NEW YORK

WORTHINGTON, SKILLING, HELLE & JACKSON — Civil & Structural Engineers

PROJECT THE WORLD TRADE CENTER | TITLE SCHEDULE FOR DETAIL 278A | DATE 7-28-84

REVISIONS

	278A
PLATES	
P	6"x 1'4"
Q	1'4"
ANGLES	
R	4x3½x⅜
S	4x3½x⅜
DIMENSIONS	
A	1'-4"
BOLTS	
K	4-⅞"ϕ
L	2-¾"ϕ
M	4-1⅛ϕ
WELDS	
①	⅜
STUDS	
N	3-¾"ϕx 0'-3"

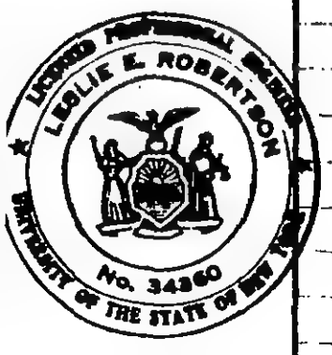

6-AB1-85.1

WORTHINGTON, SKILLING, HELLE & JACKSON Civil & Structural Engineers

PROJECT THE WORLD TRADE CENTER | TITLE CONNECTION DETAIL 279 A | DATE 6-19-67

REVISIONS

8-14-67

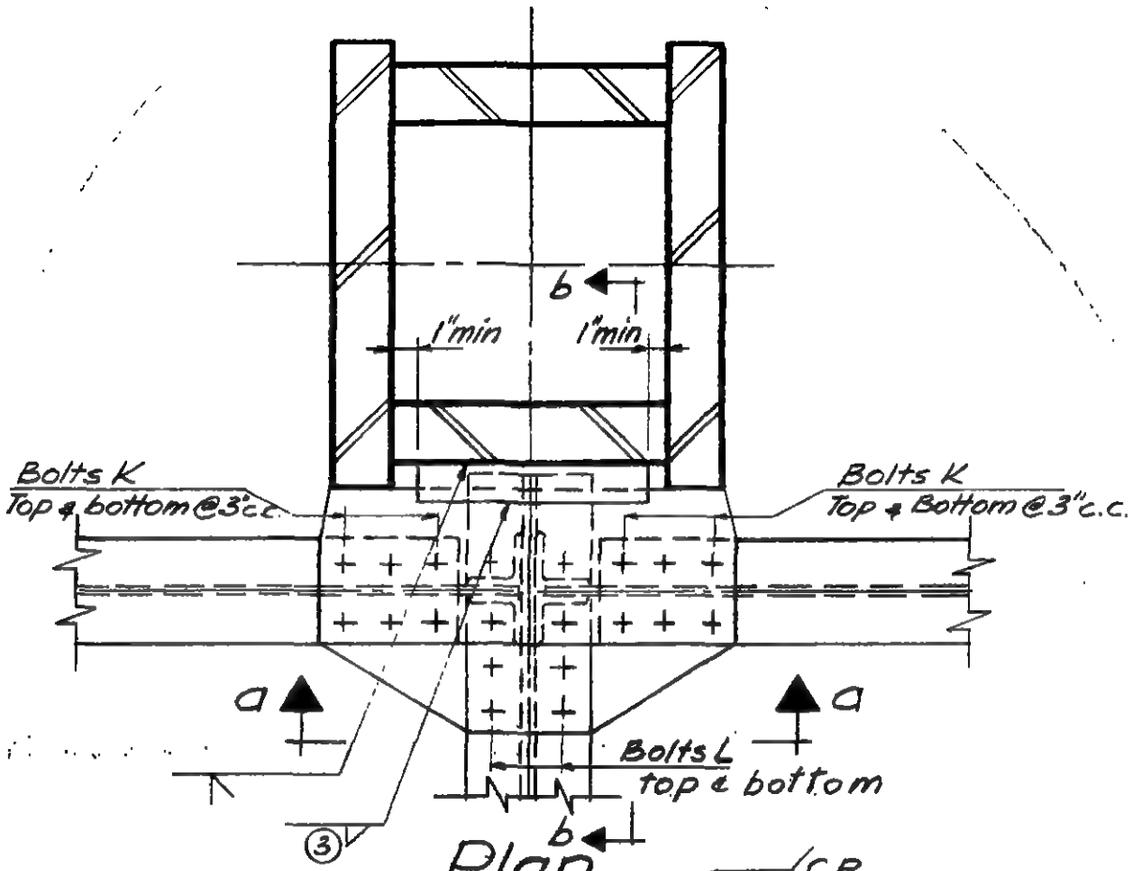

Plan

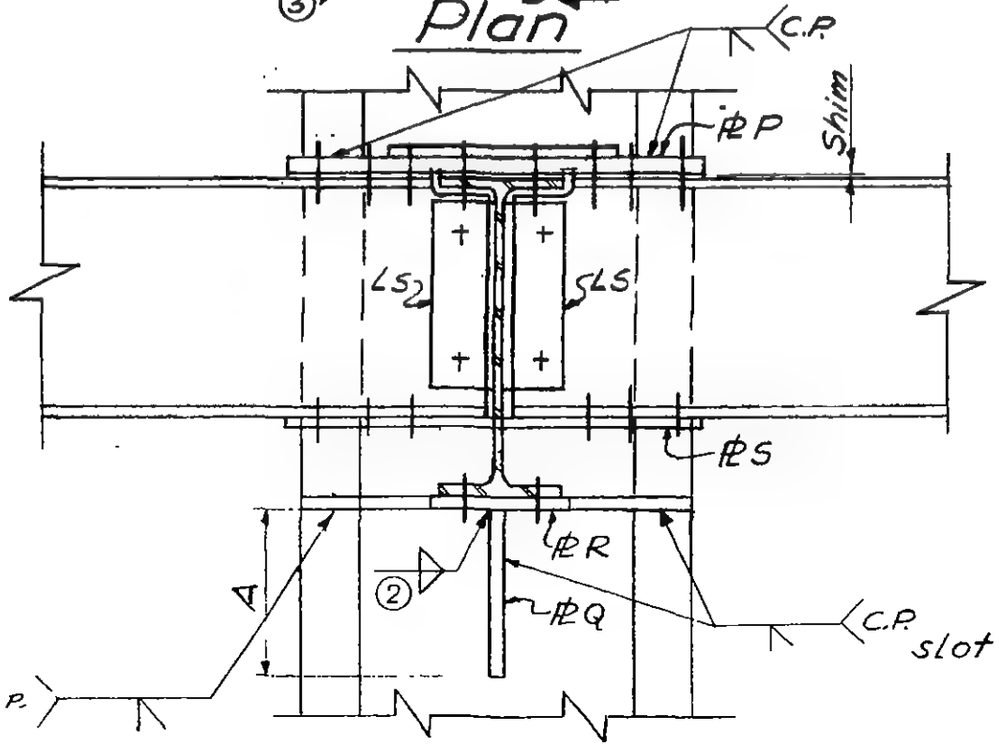

Section a-a

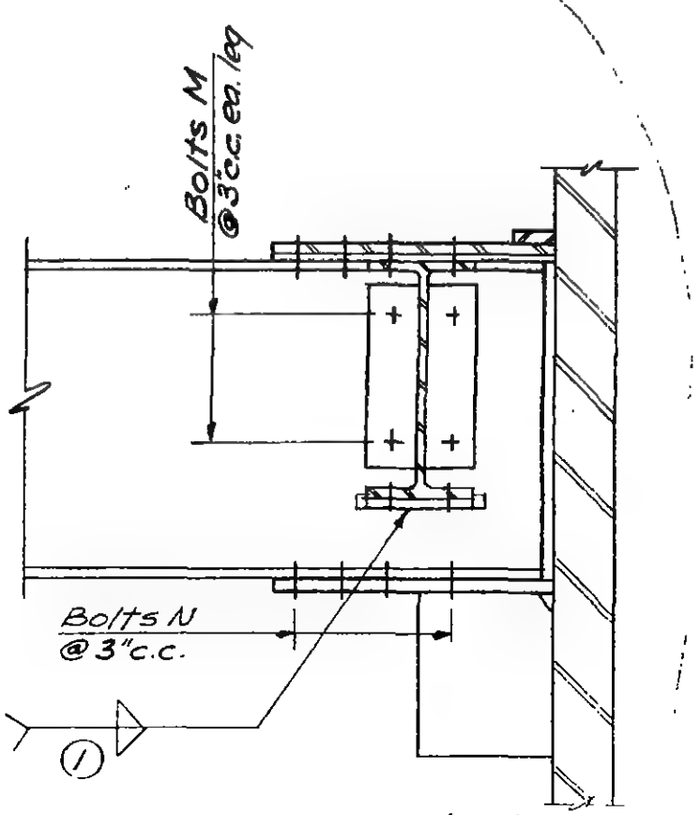

Section b-b

LICENSED PROFESSIONAL ENGINEER
LESLIE E. ROBERTSON
No. 34360
UNIVERSITY OF THE STATE OF NEW YORK

6-ABI-86

SKILLING - HELLE - CHRISTIANSEN - ROBERTSON Structural & Civil Engineers

PROJECT THE WORLD TRADE CENTER | TITLE SCHEDULE FOR DETAIL 279 A | DATE 8-14-67

REVISIONS

	279 A					
PLATES						
P	3/4"					
Q	6"×3/4"					X
R	3/4"					
S	3/4"					
ANGLES						
S	4×3½×3/8×0'-8½"					
DIMENSION						
A	1'-6"					
BOLTS						
K	6-1⅛"ϕ					
L	10-1"ϕ					
M	3-¾"ϕ					
N	10-1"ϕ					
WELDS						
①	5/16"					
②	3/8"					
③	¾"					

LICENSED PROFESSIONAL ENGINEER
LESLIE E. ROBERTSON
No. 34360
UNIVERSITY OF THE STATE OF NEW YORK

6-ABI-86.1

WORTHINGTON, SKILLING, HELLE & JACKSON — Civil & Structural Engineers

PROJECT THE WORLD TRADE CENTER | TITLE CONNECTION DETAIL 280 A | DATE 6-19-67

REVISIONS

8-14-67

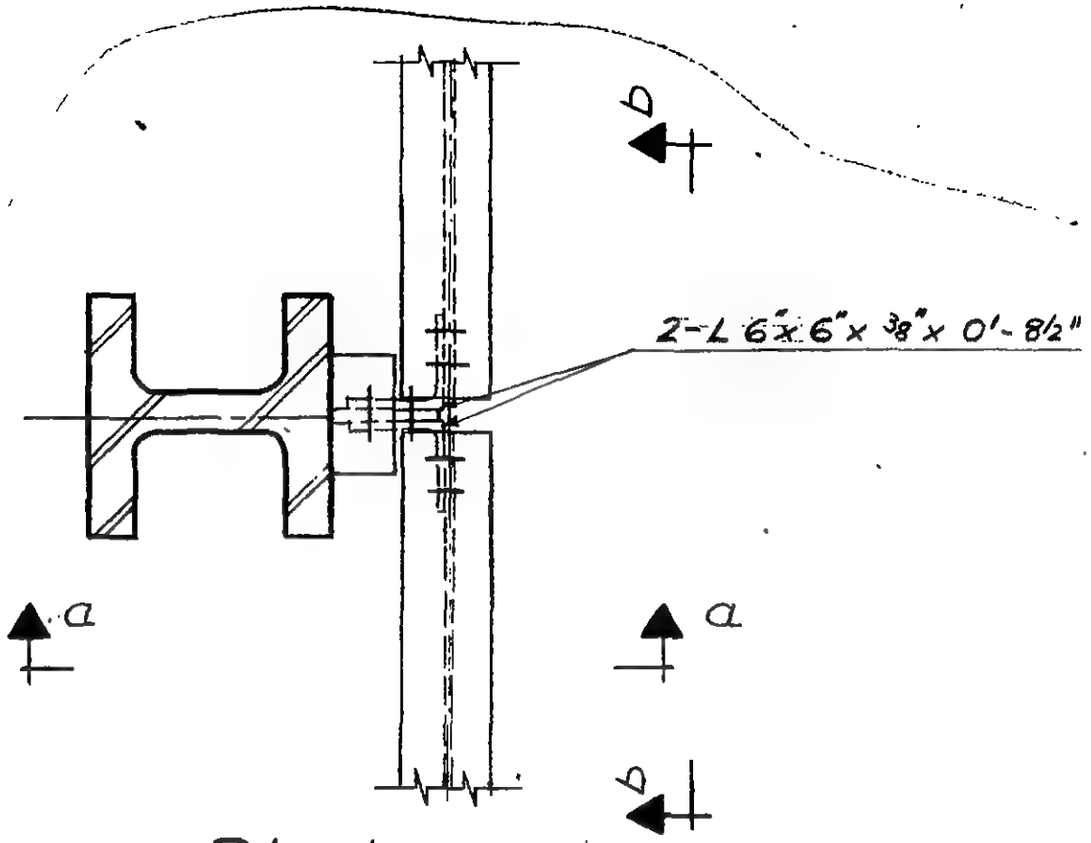

Plan

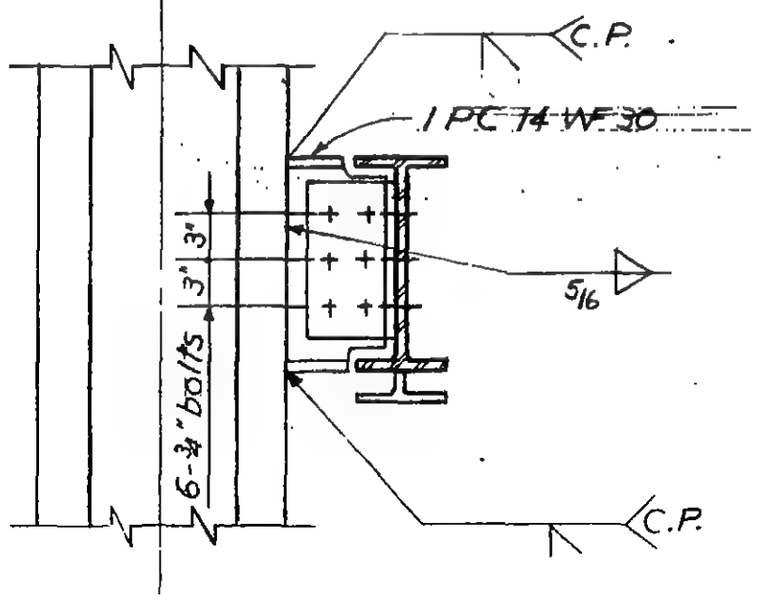

Section a-a

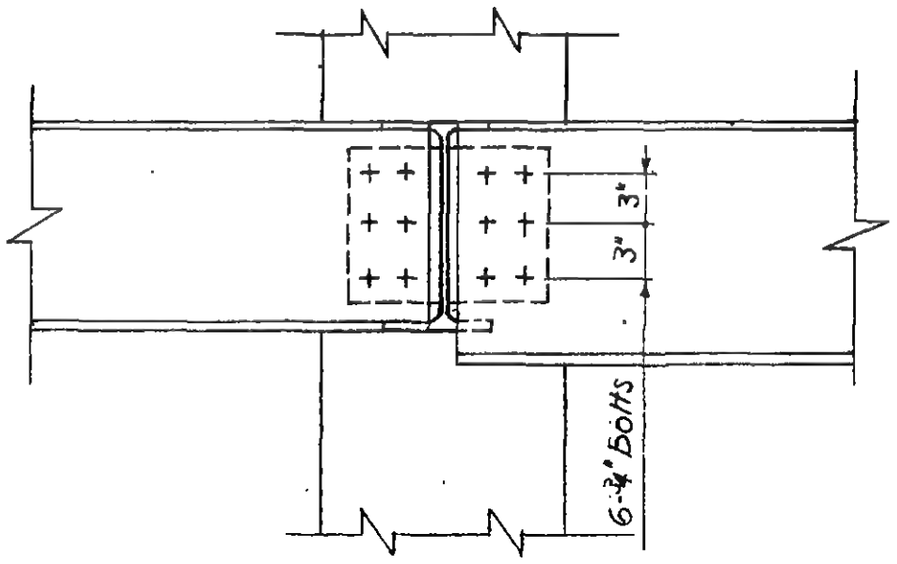

Section b-b

LICENSED PROFESSIONAL ENGINEER
LESLIE E. ROBERTSON
No. 34360
UNIVERSITY OF THE STATE OF NEW YORK

6-ABI-87

WORTHINGTON, SKILLING, HELLE & JACKSON — Civil & Structural Engineers

PROJECT: THE WORLD TRADE CENTER | TITLE: CONNECTION DETAIL 281A | DATE: 6-5-67

REVISIONS

10-2-67

2-21-68

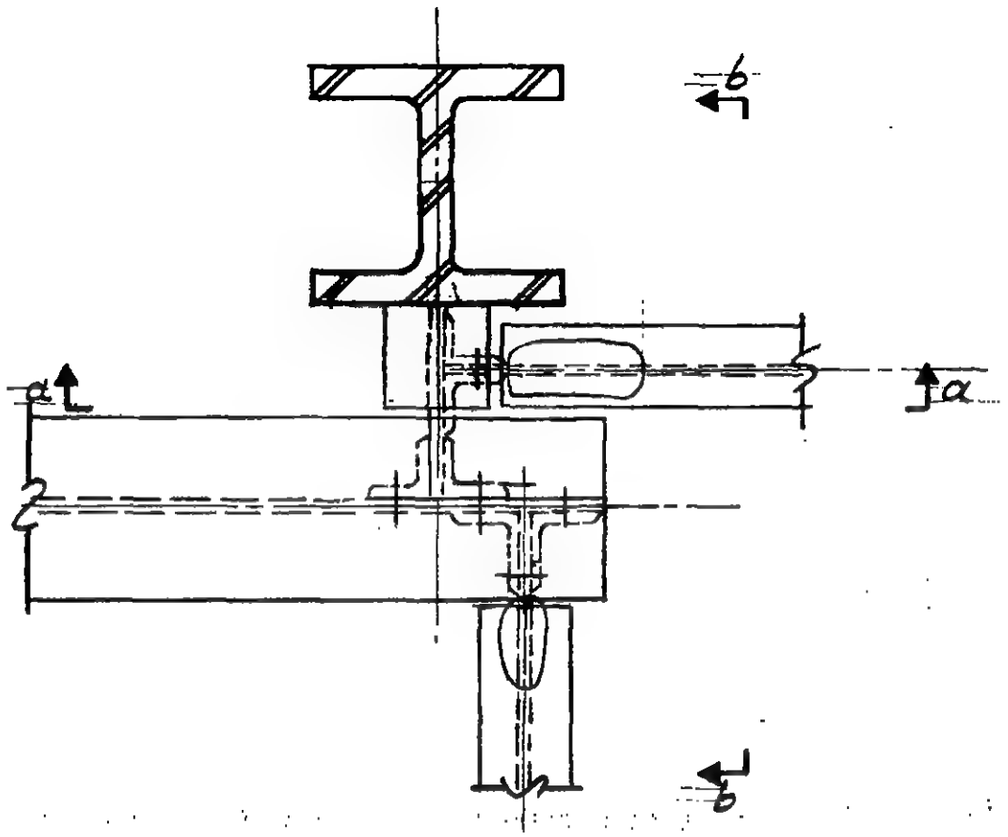

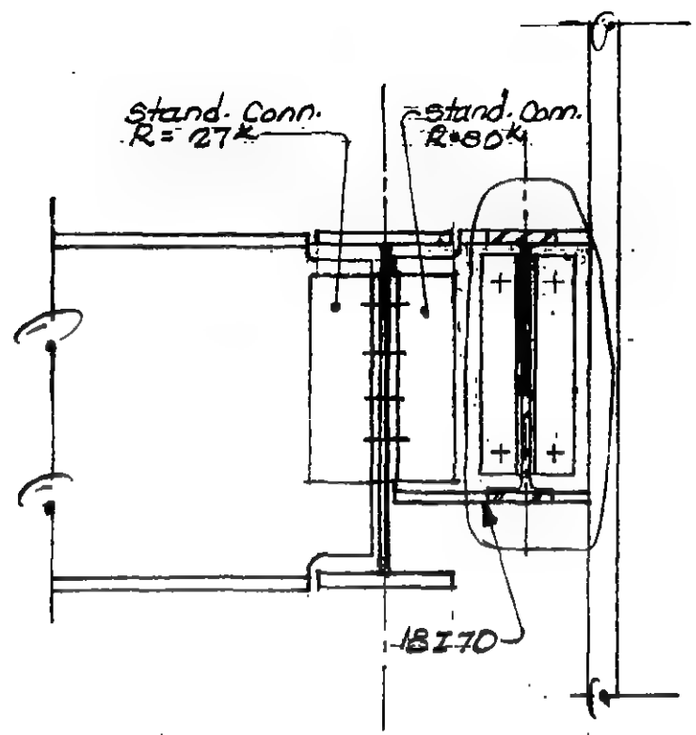

Section b-b

PLAN

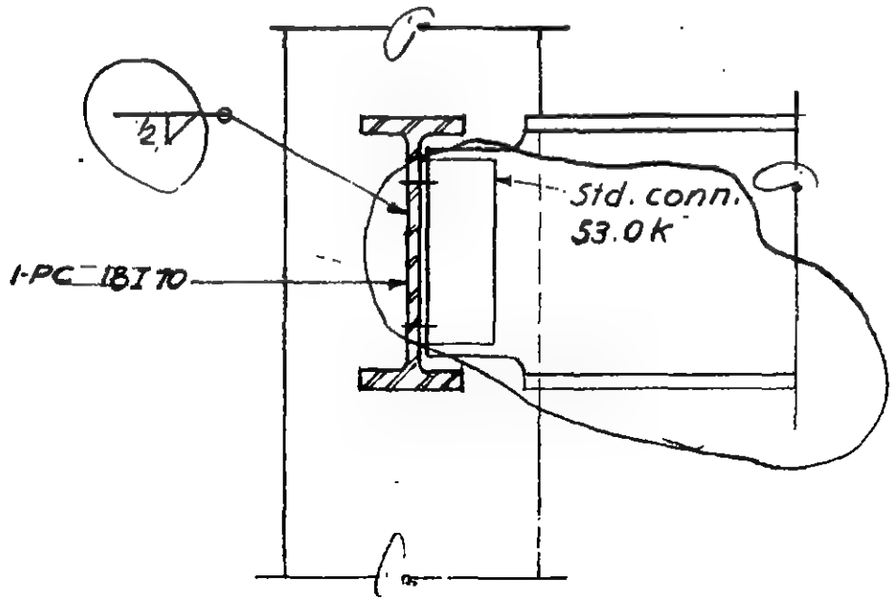

Section a-a

LICENSED PROFESSIONAL ENGINEER
LESLIE E. ROBERTSON
No. 34360
UNIVERSITY OF THE STATE OF NEW YORK

6-AB1-88

WORTHINGTON, SKILLING, HELLE & JACKSON — Civil & Structural Engineers

PROJECT: THE WORLD TRADE CENTER | TITLE: CONNECTION DETAIL 282 A, B, C, D | DATE: 5-1-67

REVISIONS

5-9-67
7-28 67
8-5-67
11-14-67
12-7-67

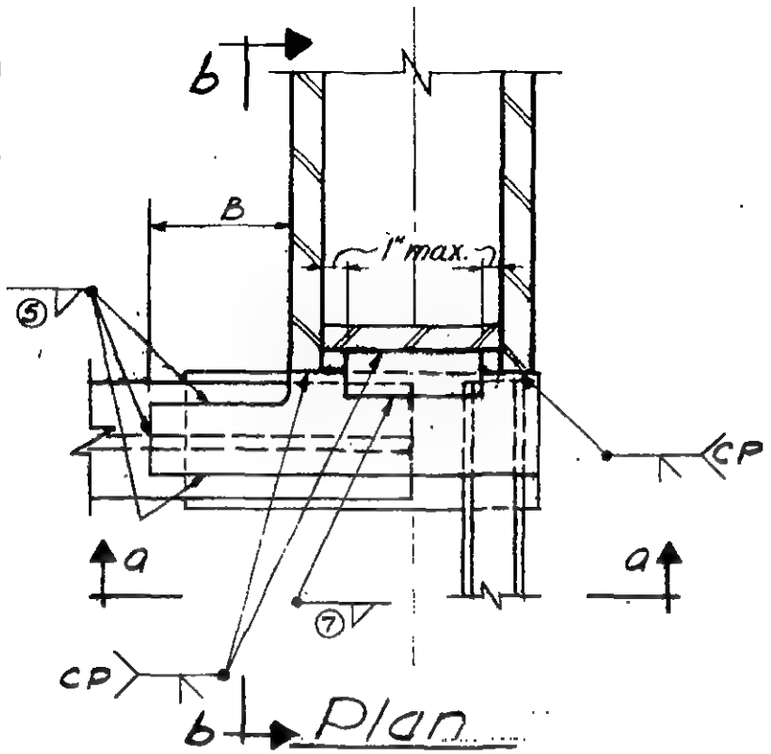

Note: Use Alt. detail for all location except where shop drawings are approved prior to 12-15-67

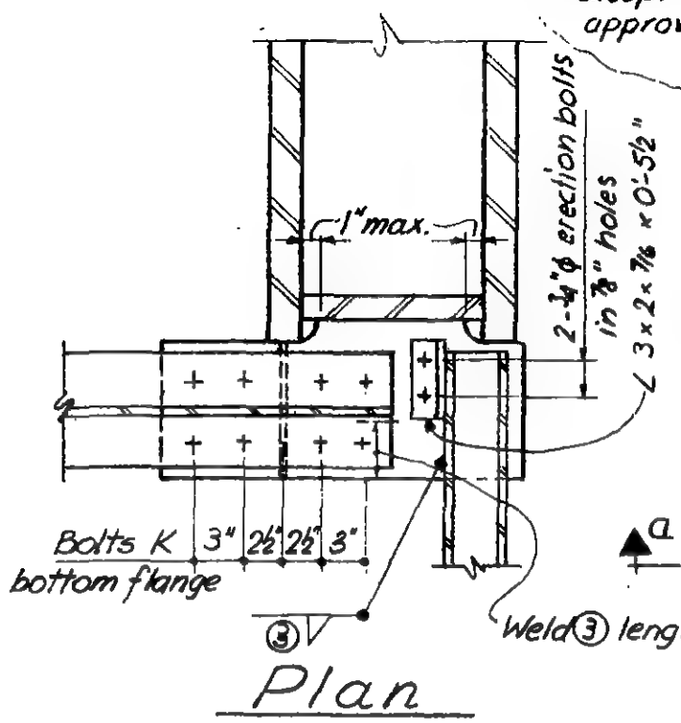

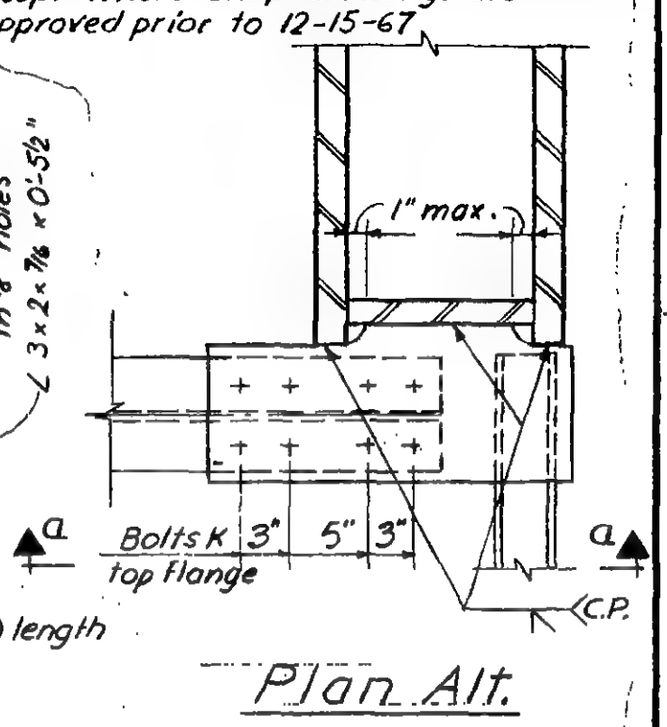

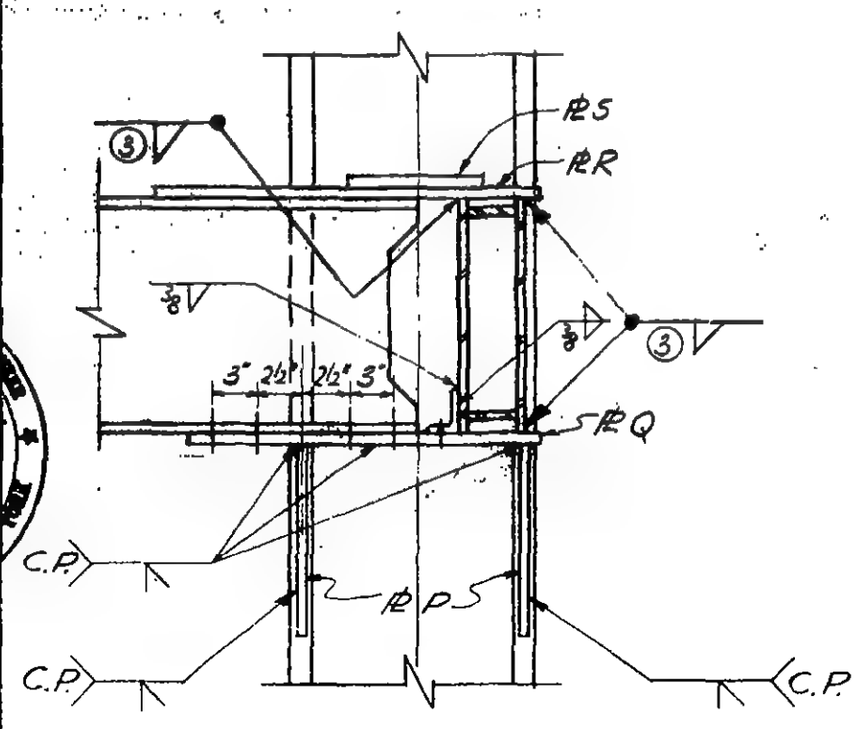

Section a-a

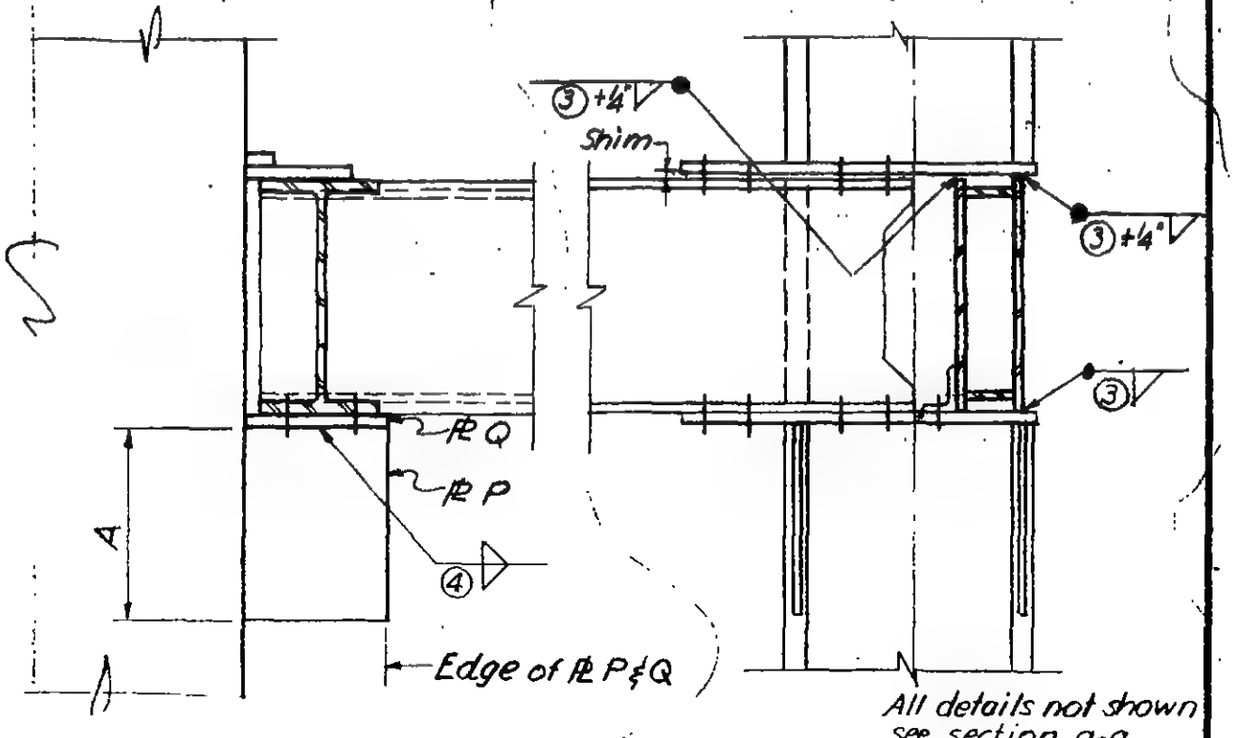

Section b-b

All details not shown see section a-a.

Section a-a Alt.

6-AB1-89

LICENSED PROFESSIONAL ENGINEER
LESLIE E. ROBERTSON
No. 34360
REGISTERED IN THE STATE OF NEW YORK

WORTHINGTON, SKILLING, HELLE & JACKSON — Civil & Structural Engineers

PROJECT THE WORLD TRADE CENTER | TITLE SCHEDULE FOR DETAIL 282 A, B, C, D | DATE 7-28-67

REVISIONS
-5-67

	282 A	282 B	282 C, D			
PLATES						
P	7/16"	5/8"	5/8"			
Q	3/4"	7/8"	3/4"			
R	3/4"	7/8"	3/4"			
S	3" x 3/4"	3" x 7/8"	3/4"			
DIMENSIONS						
A	1'-3"	1'-3"	1'-3"			
B	0'-6"	0'-9"	0'-9"			
BOLTS						
K	8 - 1" ϕ	8 - 1 1/8" ϕ	8 - 1" ϕ			
WELDS						
③	9/16	9/16	1/2			
④	5/16	5/16	5/16			
⑤	1/2	5/8	1/2			
⑦	5/8	3/4	5/8			

LICENSED PROFESSIONAL ENGINEER
LESLIE E. ROBERTSON
No. 34360
UNIVERSITY OF THE STATE OF NEW YORK

6-ABI-89.1

WORTHINGTON, SKILLING, HELLE & JACKSON — Civil & Structural Engineers

PROJECT: THE WORLD TRADE CENTER | TITLE: CONNECTION DETAIL 283 A,B,S,T,Y,Z | DATE: 5-1-67

REVISIONS
7-5-67
9-15-67
2-9-68

6-ABI-90.5 for schedule 283 A,B
6-ABI-90.9 for schedule 283 S,T,Y
6-ABI-90.11 for schedule 283 Z

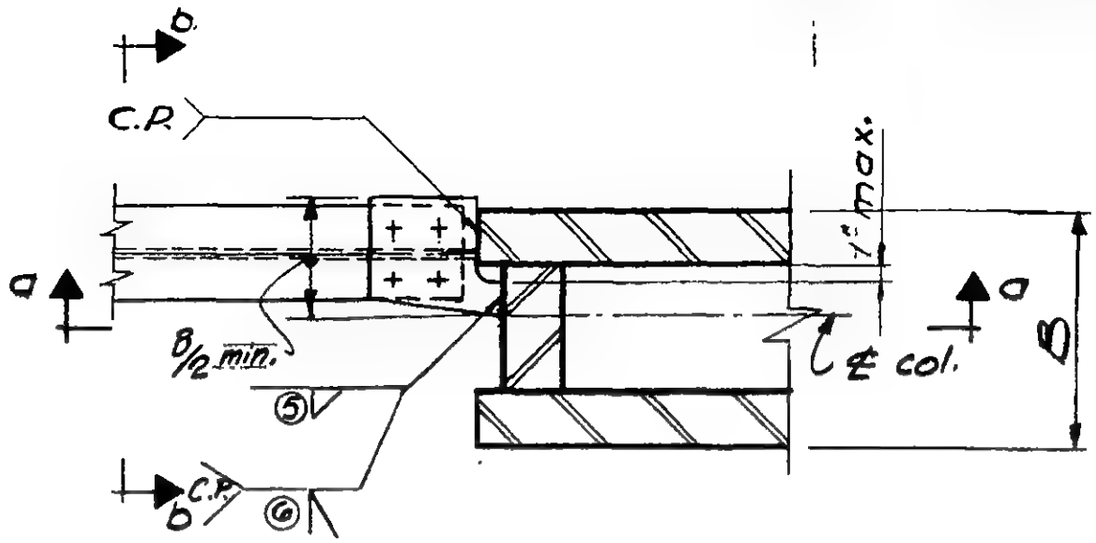

Plan

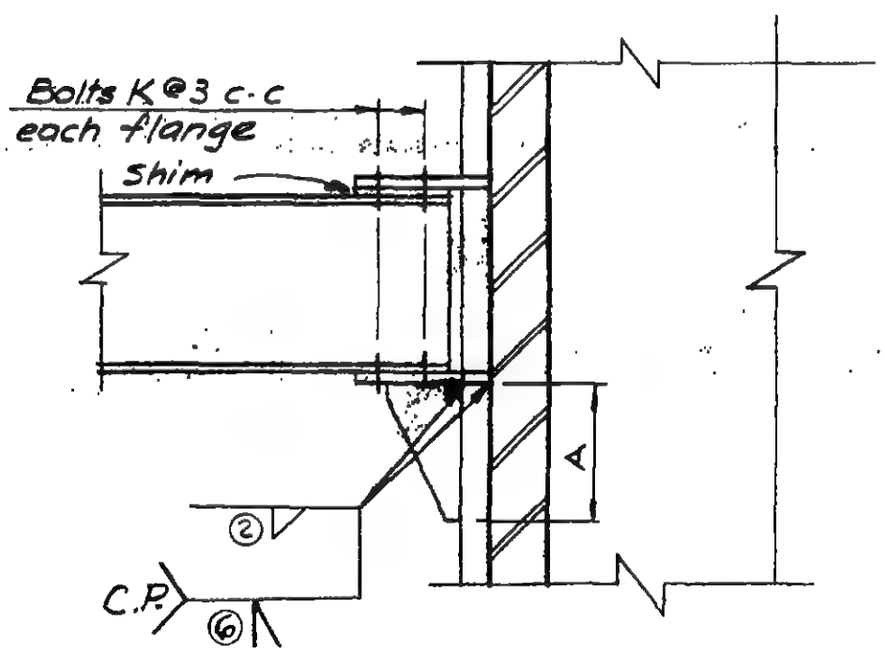

Section a-a

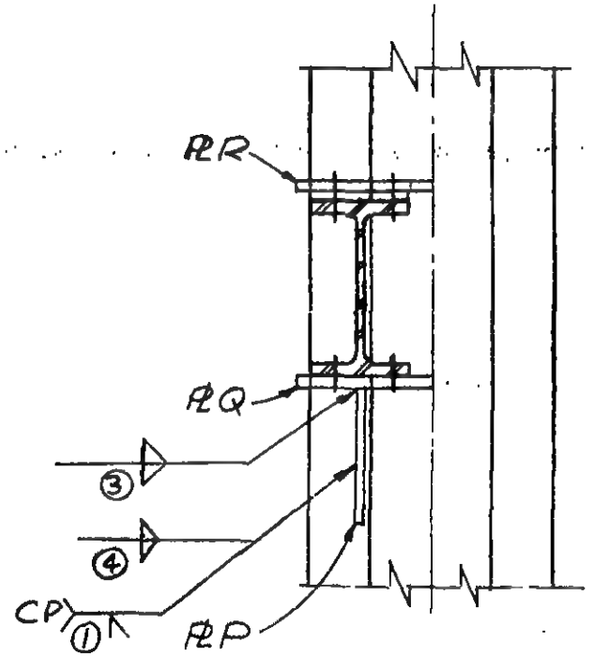

Section b-b

LESLIE E. ROBERTSON PROFESSIONAL ENGINEER No. 34360 CITY OF THE STATE OF NEW YORK

G-ABI-90

WORTHINGTON, SKILLING, HELLE & JACKSON — Civil & Structural Engineers

PROJECT	TITLE	DATE
THE WORLD TRADE CENTER	CONNECTION DETAIL 283 C ℄ L	7-5-67

REVISIONS
7-28-67

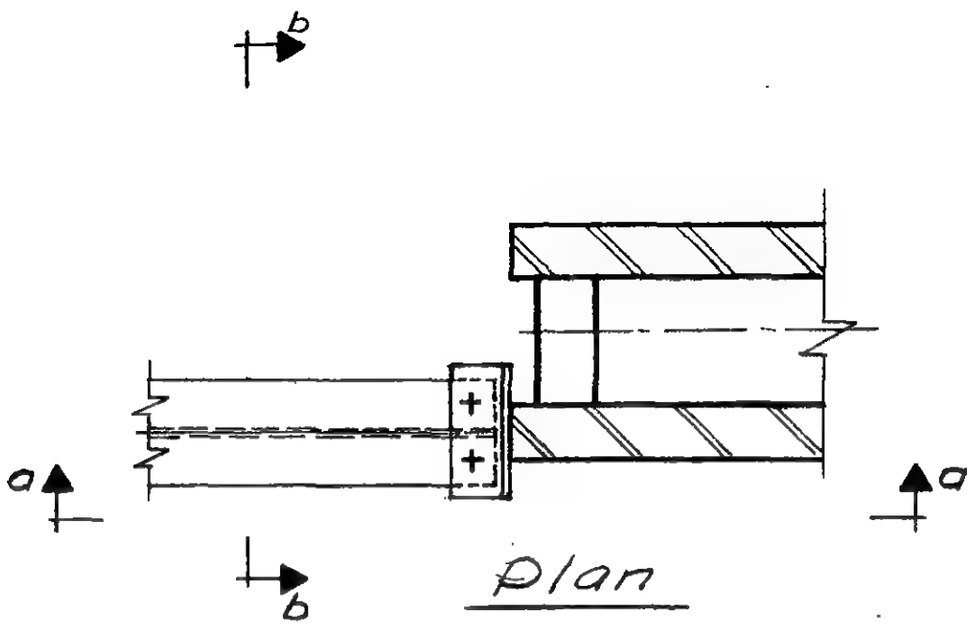

Plan

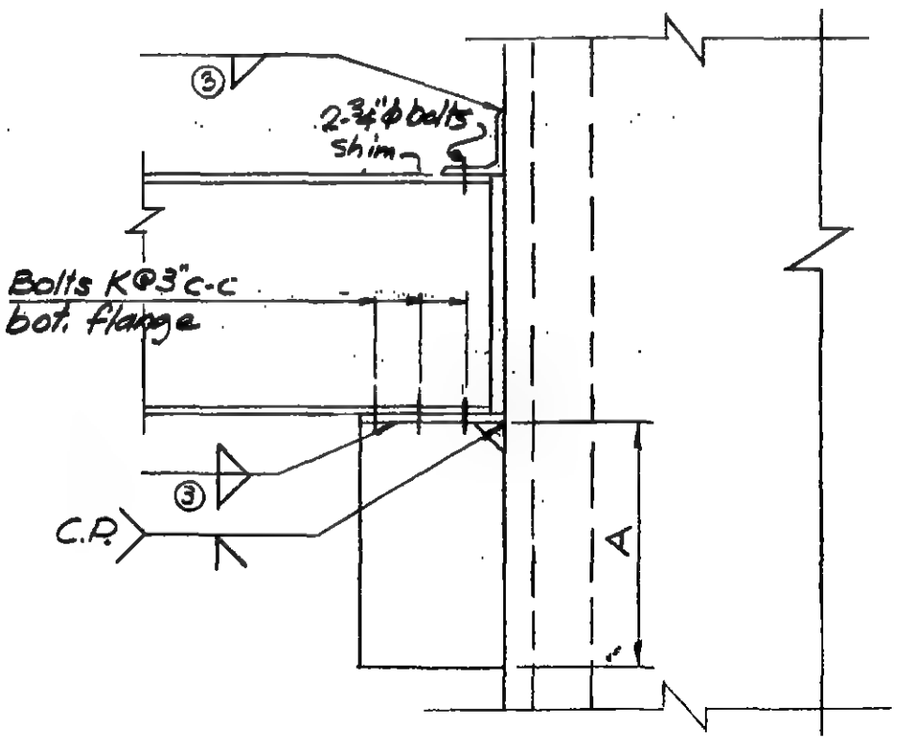

Section a-a

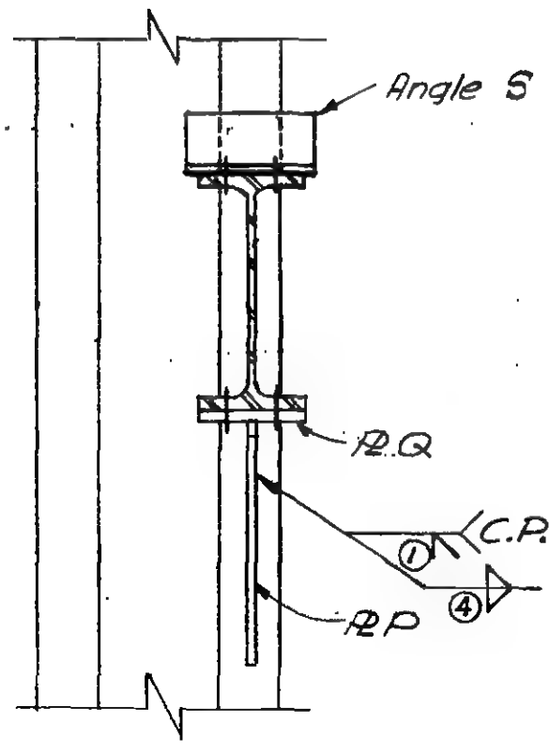

Section b-b

LICENSED PROFESSIONAL ENGINEER
LESLIE E. ROBERTSON
No. 34360
STATE OF NEW YORK

G-AB1-90.1

WORTHINGTON, SKILLING, HELLE & JACKSON — Civil & Structural Engineers

PROJECT THE WORLD TRADE CENTER | TITLE CONNECTION DETAIL 283 D&E | DATE 7-5-67

REVISIONS

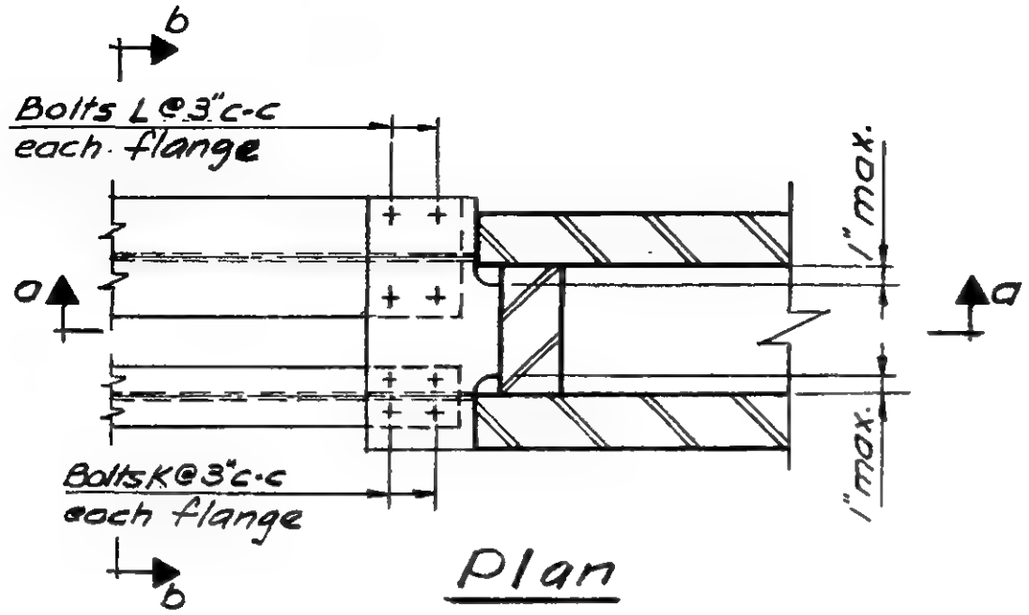

Plan

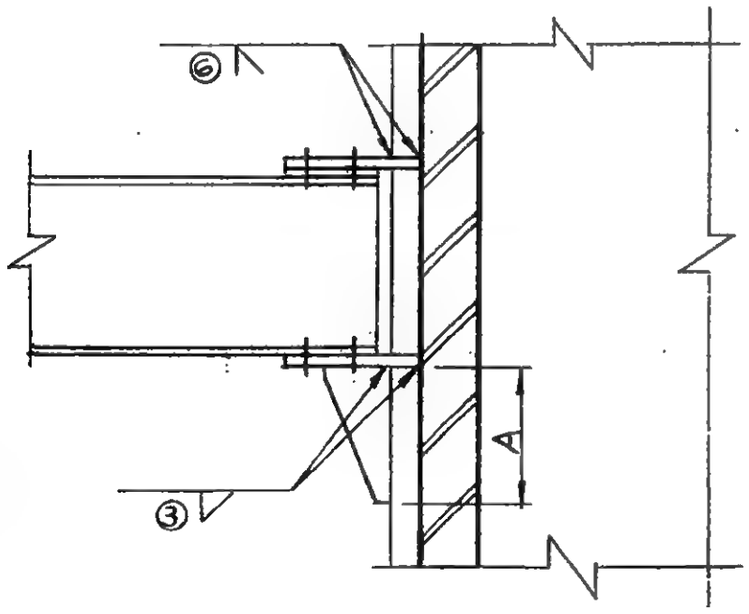

Section a-a

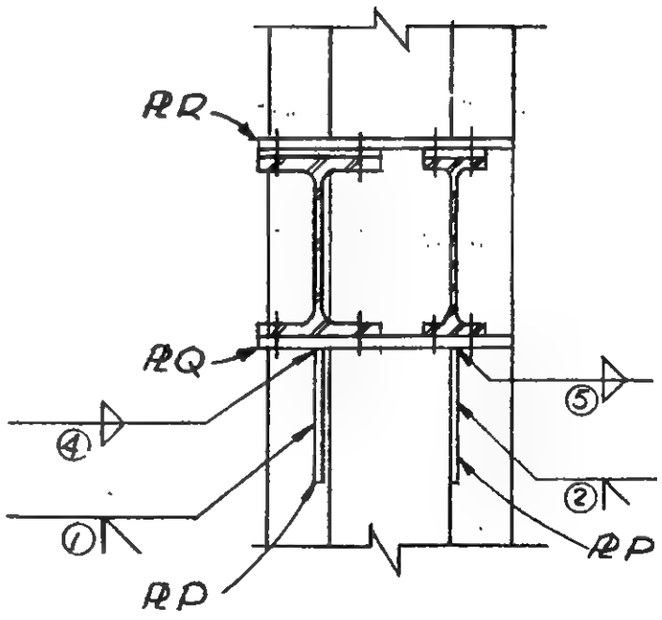

Section b-b

LICENSED PROFESSIONAL ENGINEER
LESLIE E. ROBERTSON
No. 34860
STATE OF NEW YORK

G-ABI-90.2

WORTHINGTON, SKILLING, HELLE & JACKSON — Civil & Structural Engineers

PROJECT: THE WORLD TRADE CENTER | TITLE: CONNECTION DETAIL 283 F | DATE: 7-5-67

REVISIONS

7-28-67

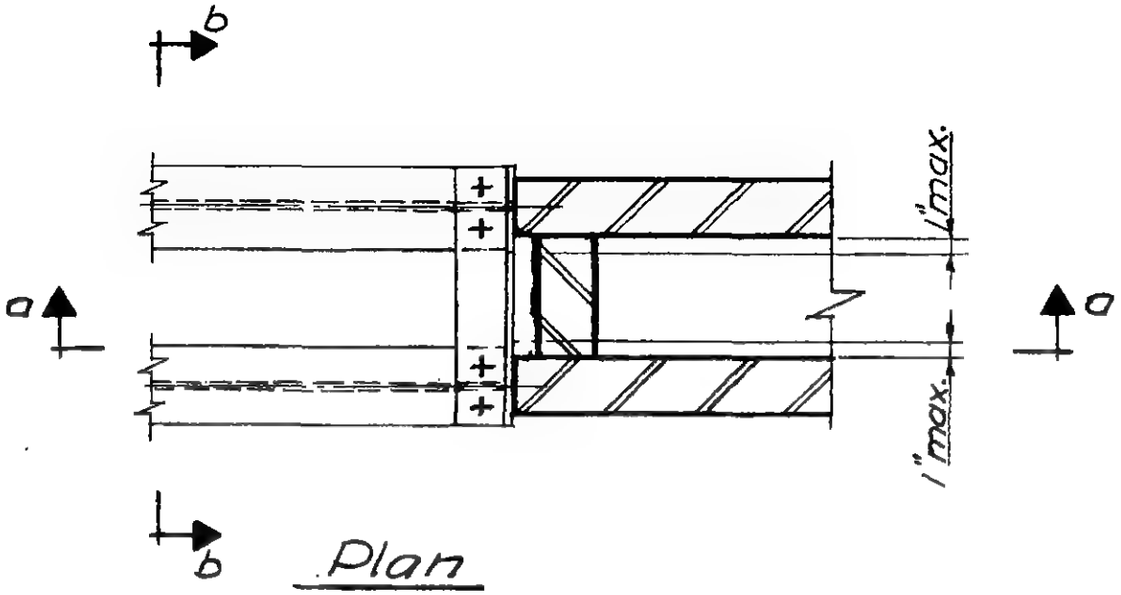

Plan

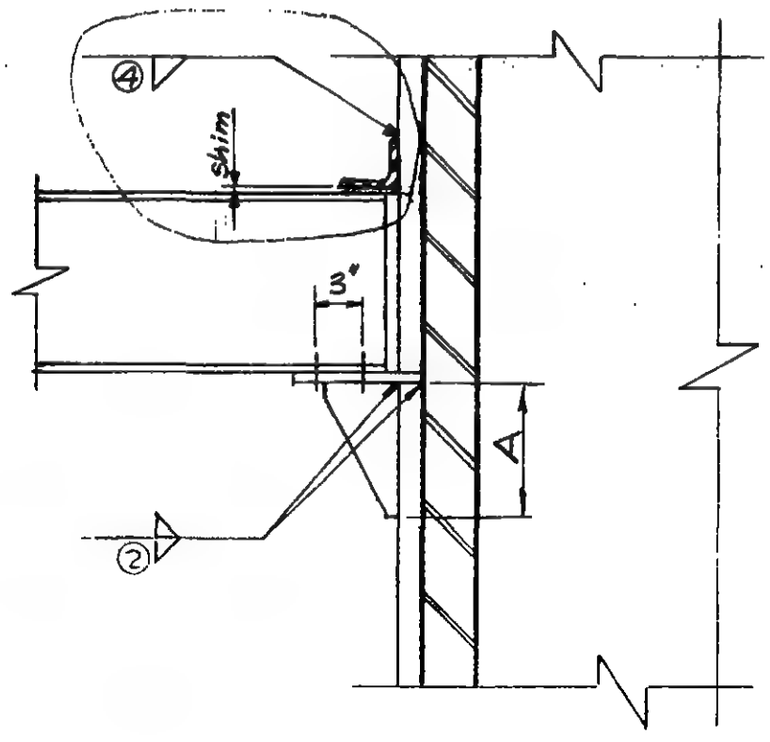

Section a-a

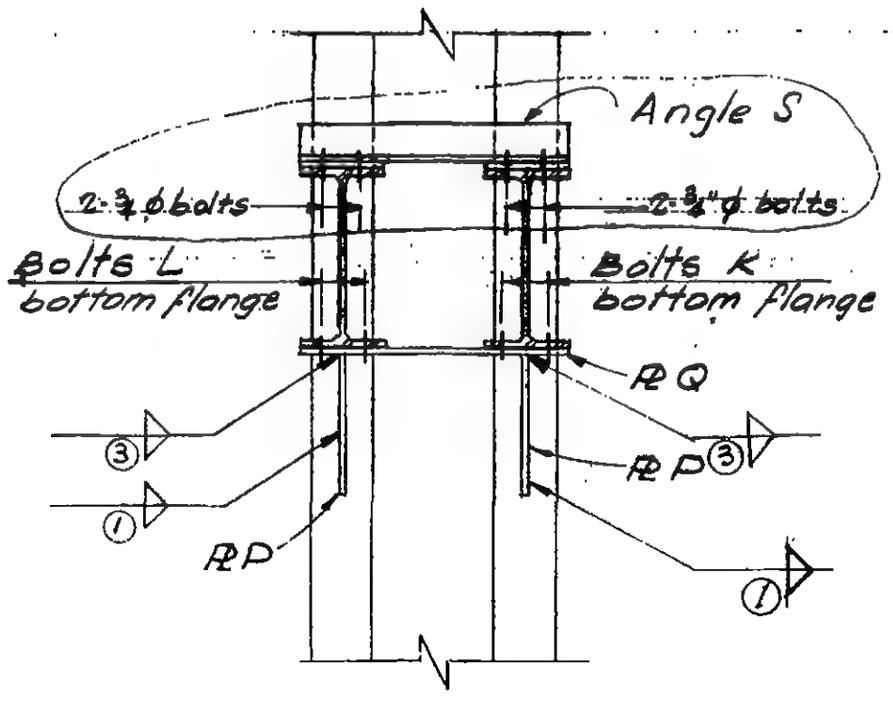

Section b-b

LICENSED PROFESSIONAL ENGINEER
LESLIE E. ROBERTSON
No. 34360
STATE OF NEW YORK

6-ABI-90.3

WORTHINGTON, SKILLING, HELLE & JACKSON — Civil & Structural Engineers

PROJECT THE WORLD TRADE CENTER | TITLE CONNECTION DETAIL 283 G.H&Q | DATE 7-5-67

REVISIONS
7-28-67
9-15-67

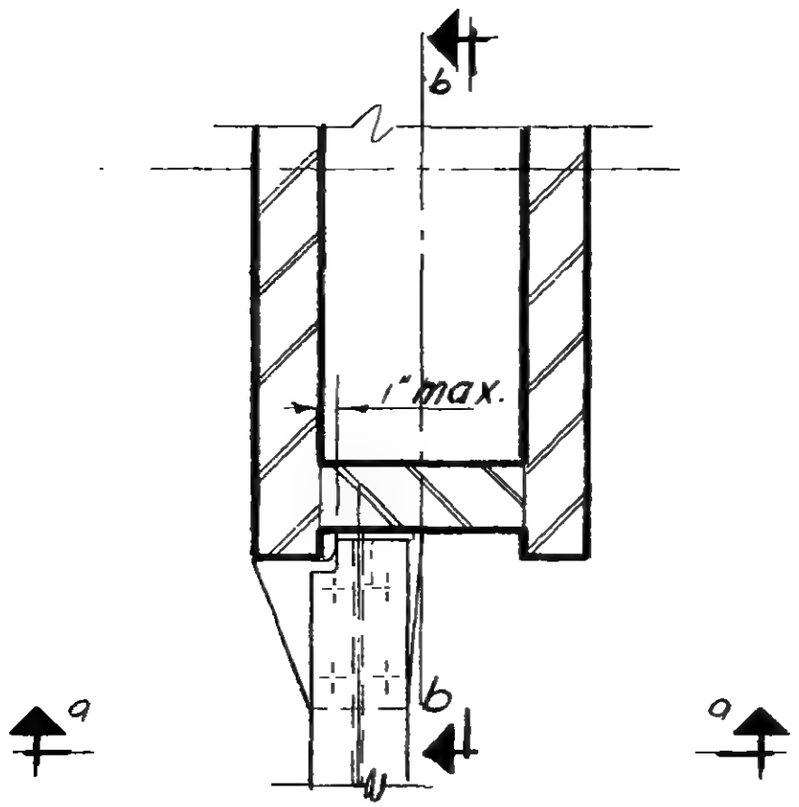

Plan
Detail 283 G&H

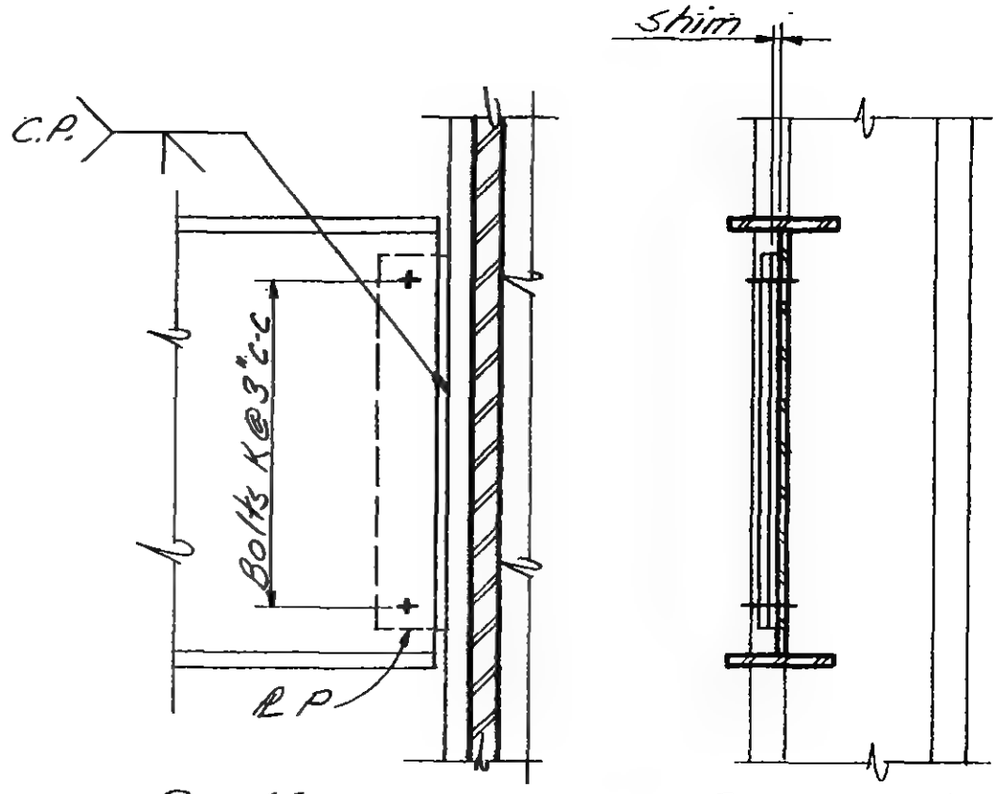

Section a-a

Section b-b

Detail 283 Q

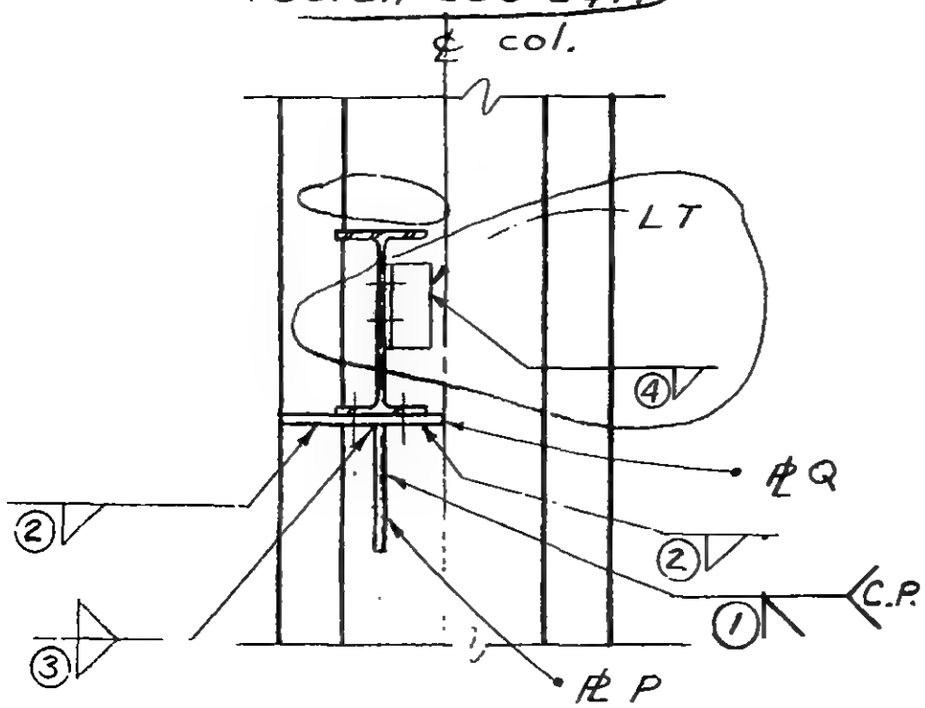

Section a-a

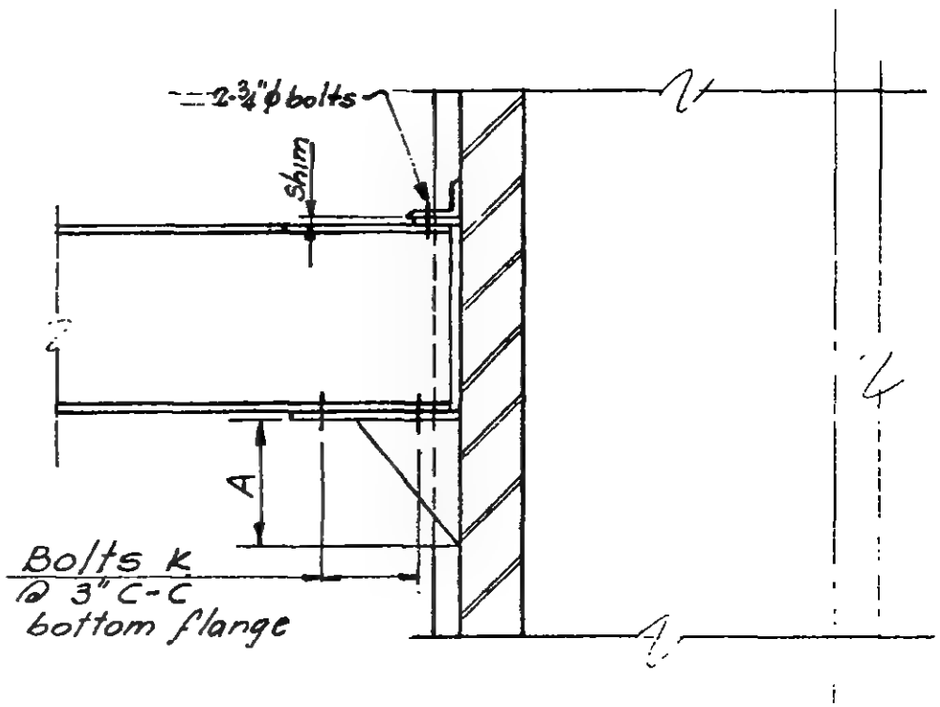

Section b-b

G-AB1-90.4

LICENSED PROFESSIONAL ENGINEER
LESLIE E. ROBERTSON
No. 34360
STATE OF NEW YORK

WORTHINGTON, SKILLING, HELLE & JACKSON — Civil & Structural Engineers

PROJECT THE WORLD TRADE CENTER | TITLE SCHEDULE FOR DETAIL 283 A-H | DATE 7-5-67

REVISIONS
1-28-67

REF. DWGS.	G-AB1-90	G-AB1-90	G-AB1-90.1	G-AB1-90.2	G-AB1-90.3	G-AB1-90.4
	283 A	283 B	283C	283 D&E	283 F	283 G&H
PLATES						
P	5" × 7/16"	7" × 7/16"	11" × 3/4"	4 1/2" × 7/16"	5" × 7/16"	5" × 7/16"
Q	7/16"	7/16"	11" × 3/4"	1/2"	11/16"	3/4"
R	7/16"	7/16"	—	1/2"	—	—
DIMENSIONS						
A	0'-9"	1'-6"	1'-4 1/2"	1'-0"	0'-9"	0'-9"
BOLTS						
K	4-3/4φ(A325)	4-3/4φ(A325)	6-1 1/8"φ(A325)	4-3/4"φ(A325)	4-3/4"φ(A325)	4-3/4φ(A325)
L			—	4-1"φ(A325)	4-3/4φ(A325)	—
WELDS						
①	C.P.	C.P.	C.P.	C.P.	7/16	C.P.
②	7/16	7/16	—	C.P.	1/2	7/16
③	5/16	5/16	5/16	1/2	5/16	5/16
④	—	—	1/4	5/16	1/4	1/4
⑤	7/16	7/16	—	5/16	—	—
⑥	—	—	—	C.P.	—	—
ANGLES						
S	—	—	4"×3 1/2"×5/16"×0'-5 1/2"	—	4"×3 1/2"×5/16"	4"×3 1/2"×5/16"×0'-5 1/2"

LESLIE E. ROBERTSON — REGISTERED PROFESSIONAL ENGINEER — No. 34360 — STATE OF NEW YORK

6-AB1-90.5

WORTHINGTON, SKILLING, HELLE & JACKSON — Civil & Structural Engineers

PROJECT THE WORLD TRADE CENTER | TITLE CONNECTION DETAIL 283 I, J, K, M & N | DATE 7-5-67

REVISIONS
7-28-67
8-5-67
5-6-68

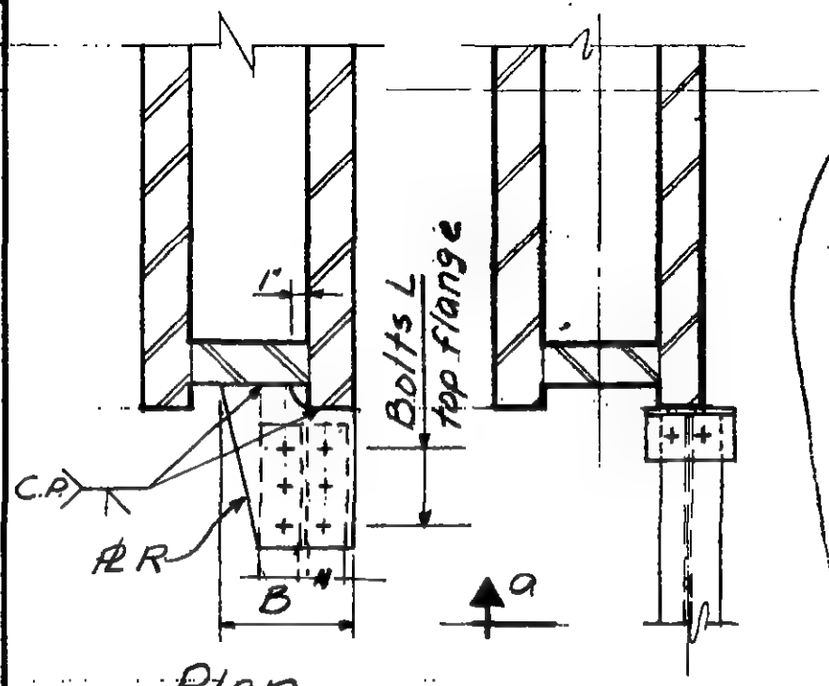

Plan
DETAIL 283 M&N
Bottom flange conn. same as Detail 283I

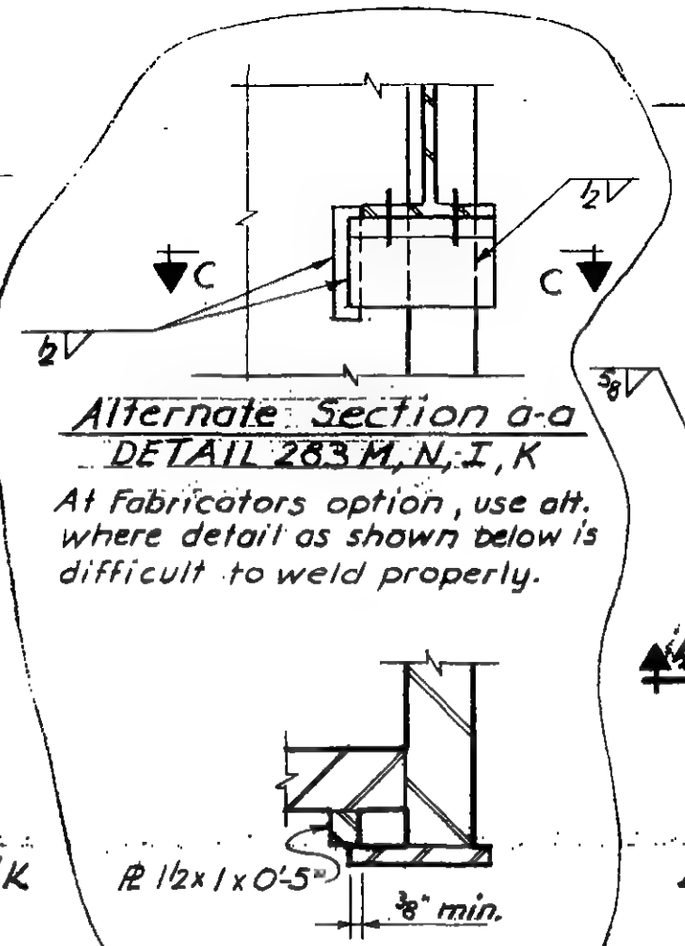

Alternate Section a-a
DETAIL 283 M, N, I, K

At Fabricators option, use alt. where detail as shown below is difficult to weld properly.

Section c-c

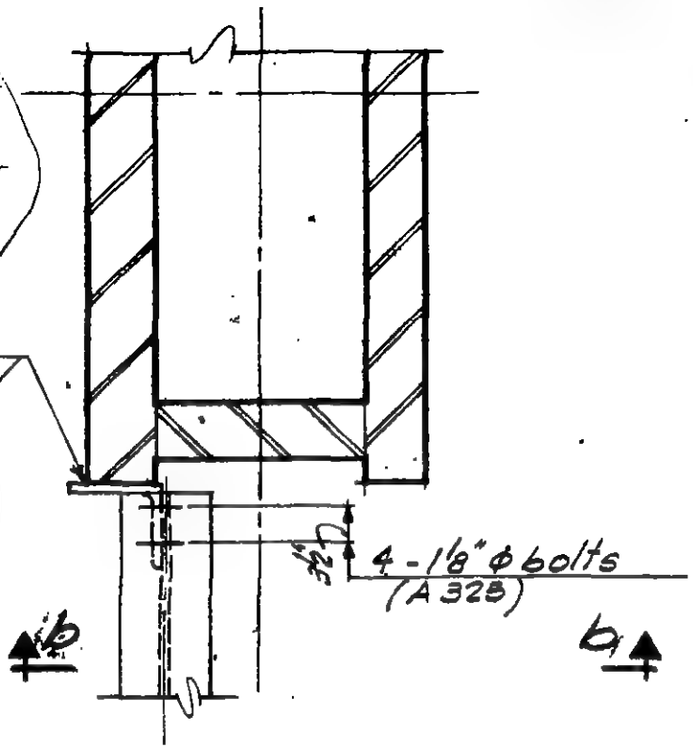

Plan
DETAIL 283 J

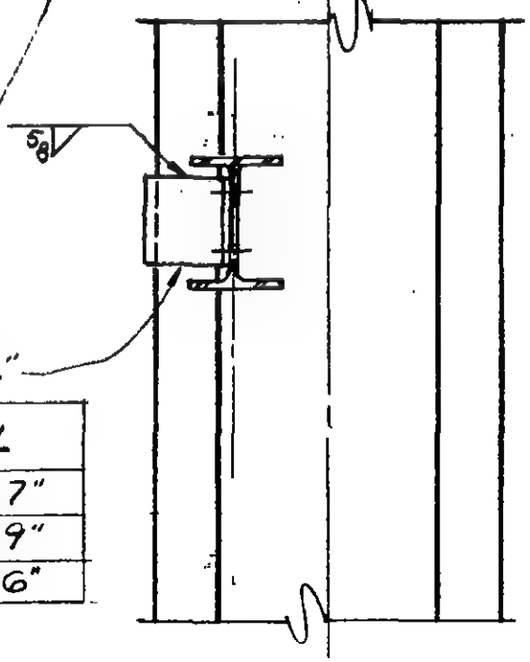

Beam size	L
10"	0'-7"
12"	0'-9"
8"	0'-6"

Plan
DETAIL 283 I & K

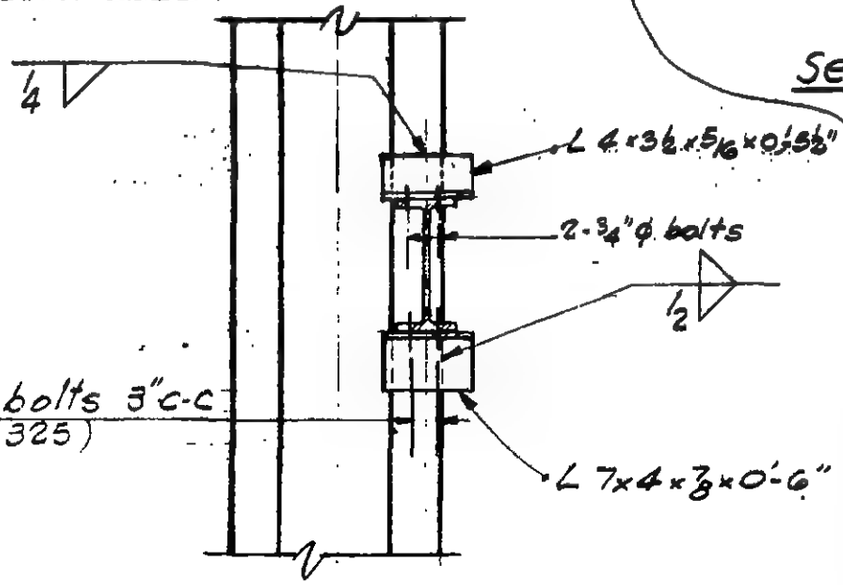

Section a-a

Section b-b

6-AB1 - 90.6

7

SKILLING - HELLE - CHRISTIANSEN - ROBERTSON Structural & Civil Engineers

PROJECT THE WORLD TRADE CENTER | TITLE SCHEDULE FOR DETAIL 283 L, M, N, P, Q & R | DATE 7-28-67

REVISIONS
9-15-67
10-2-67

REF. DWG.	6-AB1-90.1	6-AB1-90.6	6-AB1-90.6	6-AB1-90.8	6-AB1-90.4	6-AB1-90.8
	283L	283M	283N	283 P	283 Q	283 R
PLATES						
P	6½"x 9/16"	—	—	5/8"	½"	3/8"
Q	9/16"	—	—	—	—	—
R	—	3/4"	7/8"	—	—	—
DIMENSIONS						
A	1'-0"	—	—	—	—	—
B	—	0'-7"	0'-9"	—	—	—
BOLTS						
K	4-3/4"ϕ	—	—	8-1"ϕ	8-¾"	3-1"ϕ
L	—	6-7/8"ϕ	6-1"ϕ	—	—	—
WELDS						
①	—	—	—	—	—	—
②	—	—	—	—	—	—
③	5/16	—	—	—	—	—
④	½	—	—	—	—	—
ANGLES						
5	4x3½x5/16x0'-5½"	—	—	—	—	—

6-AB1-90.7

SKILLING - HELLE - CHRISTIANSEN - ROBERTSON Structural & Civil Engineers

PROJECT THE WORLD TRADE CENTER | TITLE CONNECTION DETAIL 283 P, R, U & V | DATE 9-15-67

REVISIONS

10-2-67

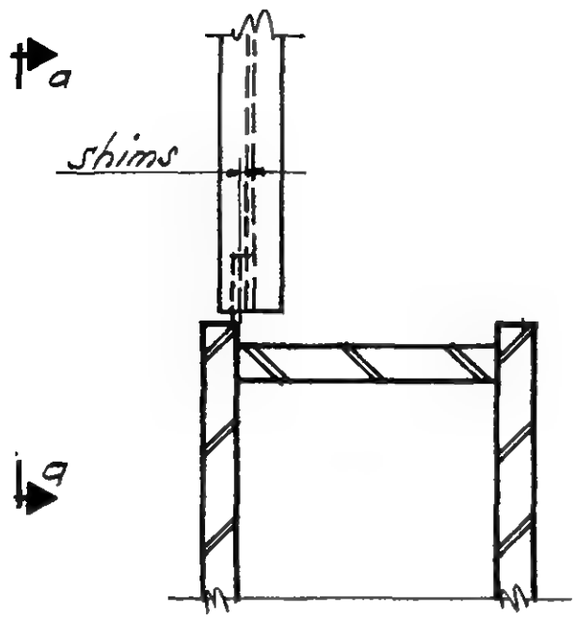

Plan

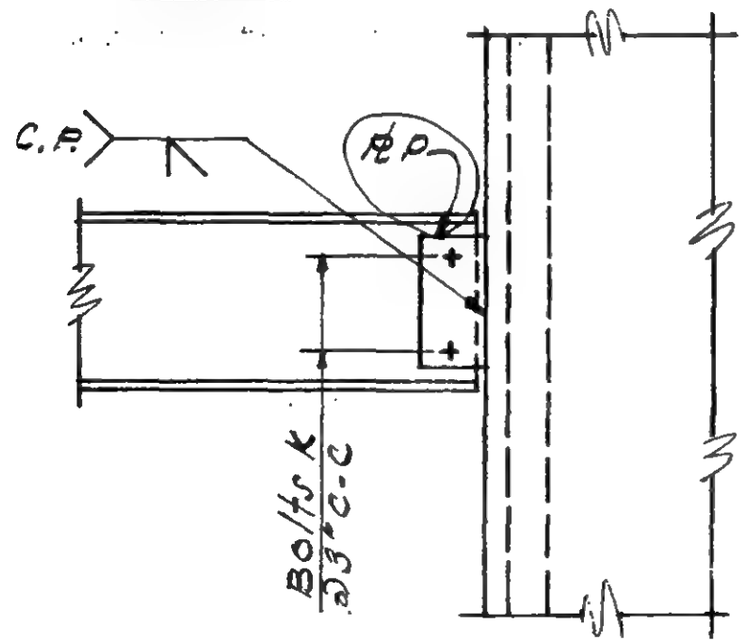

Section a-a

DETAIL 283 R & V

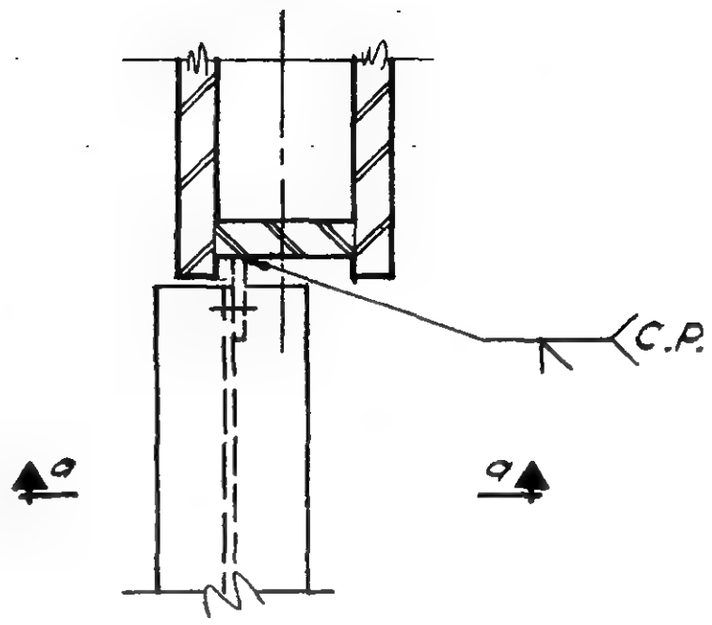

Plan

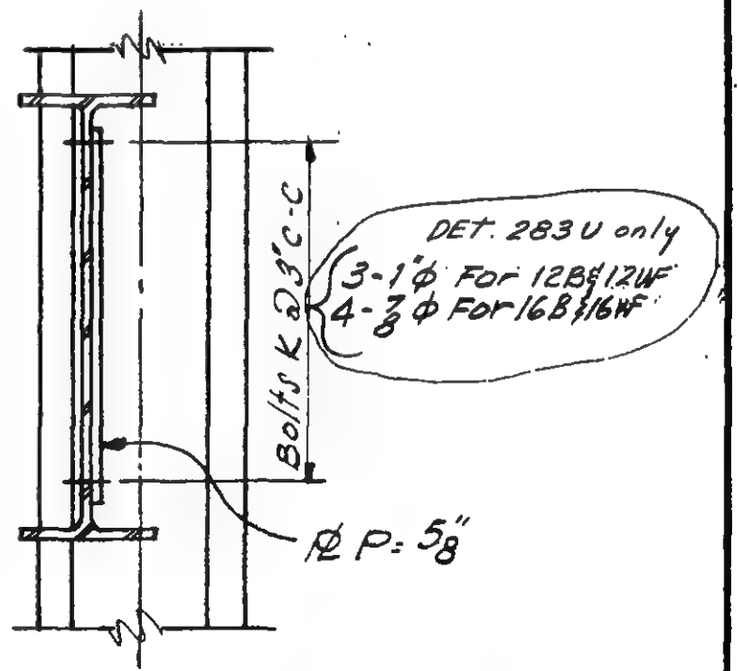

Section a-a

DETAIL 283 P & U

LICENSED PROFESSIONAL ENG NEER
LESLIE E. ROBERTSON
No. 34360
UNIVERSITY OF THE STATE OF NEW YORK

6-ABI-90.8

SKILLING - HELLE - CHRISTIANSEN - ROBERTSON Structural & Civil Engineers

PROJECT THE WORLD TRADE CENTER | TITLE SCHEDULE FOR DETAIL 283 S, T, U, V, W, Y | DATE 9-15-67

REVISIONS

10-2-67
2-9-68

REF. DWG.	6-ABI-90	6-ABI-90	6-ABI-90.8	6-ABI-90.8	6-ABI-90.	6-ABI-90
	283 S	283 T	283 U	283 V	283 W	283 Y
PLATES						
P	6" x 1/2"	7" x 7/8"	3/8"	1/2"	5/8"	5" x 7/16"
Q	1/2"	7/8"	—	—	—	1/2
R	1/2"	5/8"	—	—	—	1/2
DIMENSION						
A	0'-10"	1'-5"	—	—	10"	0'-9"
B	1'-4"	1'-4"	—	—	—	—
BOLTS						
K	6-7/8"ϕ	8-7/8"ϕ	see DWG.	5-1"ϕ bolts	4-1"ϕ A325	8-3/4"ϕ
WELDS						
①	C.P.	C.P.	—	—	—	C.P.
②	—	—	—	—	—	—
③	5/16	5/16	—	—	—	5/16
④	—	—	—	—	—	—
⑤	—	—	—	—	—	—
⑥	C.P.	C.P.	—	—	—	C.P.

G-ABI-90.9

SKILLING - HELLE - CHRISTIANSEN - ROBERTSON Structural & Civil Engineers

PROJECT THE WORLD TRADE CENTER | TITLE CONNECTION DETAIL 283 W, X | DATE 10-2-67

REVISIONS
12-21-67

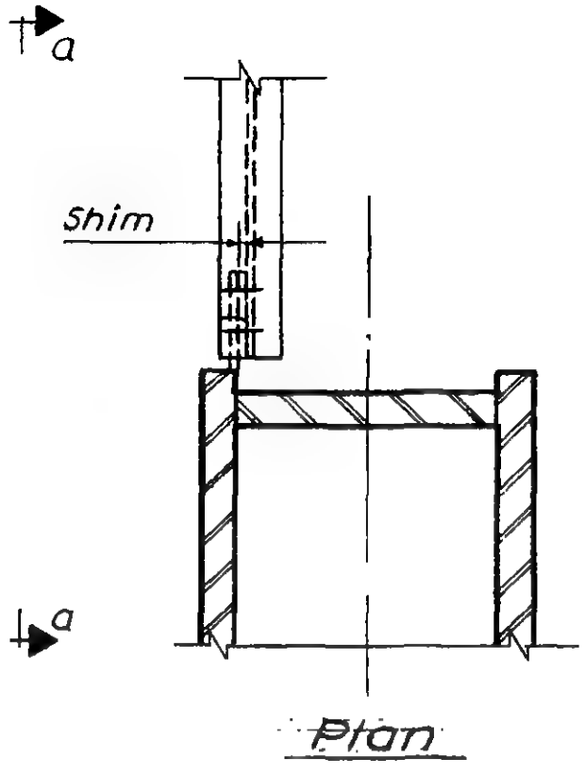

Plan

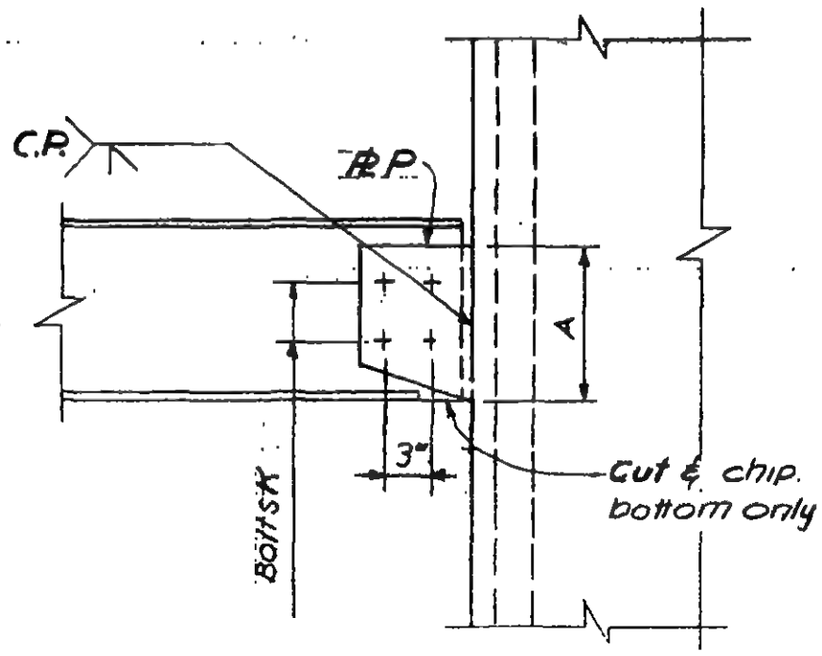

Section a-a

Detail 283 W

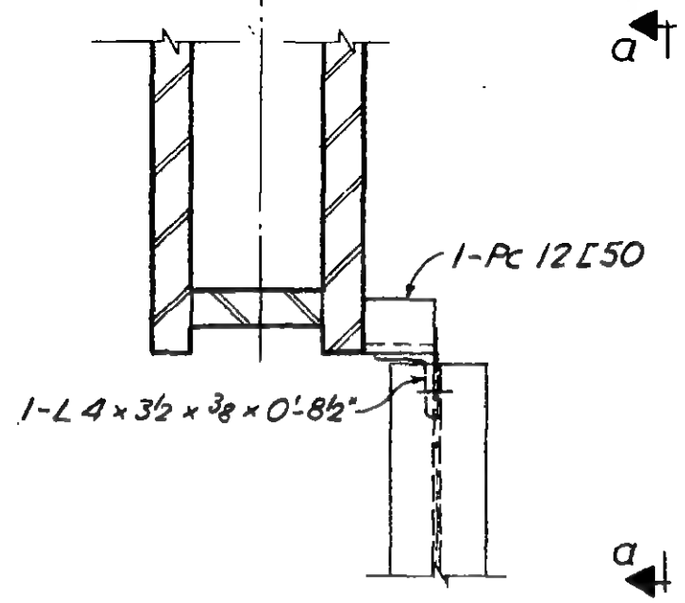

Plan

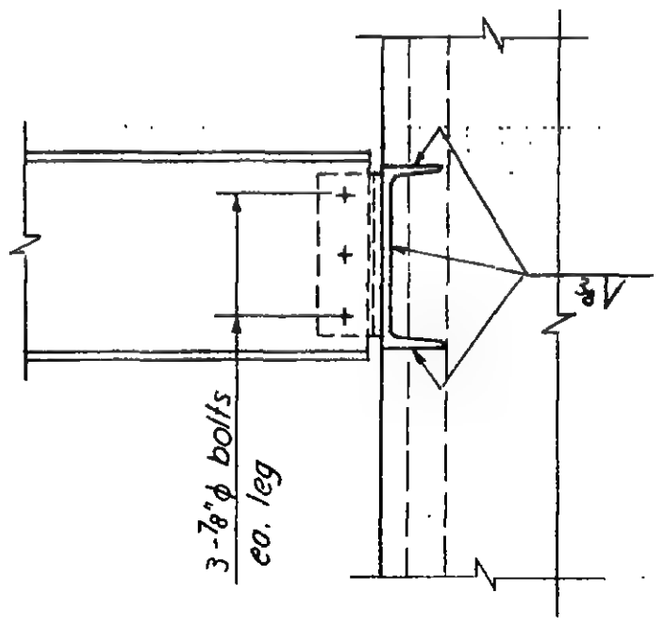

Detail 283 X

6-ABI-90.10

LICENSED PROFESSIONAL ENGINEER
LESLIE E. ROBERTSON
No. 34360
UNIVERSITY OF THE STATE OF NEW YORK

SKILLING - HELLE - CHRISTIANSEN - ROBERTSON Structural & Civil Engineers

PROJECT THE WORLD TRADE CENTER | TITLE SCHEDULE FOR DETAIL 283 Z | DATE 2-9-68

REVISIONS

REF. DWGS.	6-ABI-90					
	283 Z					
PLATES						
P	7" x 7/8"					
Q	7/8"					
R	1/2					
DIMENSION						
A	1'-2"					
BOLTS						
K	4-3/4"ϕ					
WELDS						
①	C.P.					
②	—					
③	5/16					
④	—					
⑤	—					
⑥	C.P.					

LICENSED PROFESSIONAL ENGINEER
LESLIE E. ROBERTSON
No. 34360
UNIVERSITY OF THE STATE OF NEW YORK

6-ABI-90.11

WORTHINGTON, SKILLING, HELLE & JACKSON — Civil & Structural Engineers

PROJECT: THE WORLD TRADE CENTER | TITLE: CONNECTION DETAIL 284 A | DATE: 6-5-67

REVISIONS

9-15-67

11-10-67

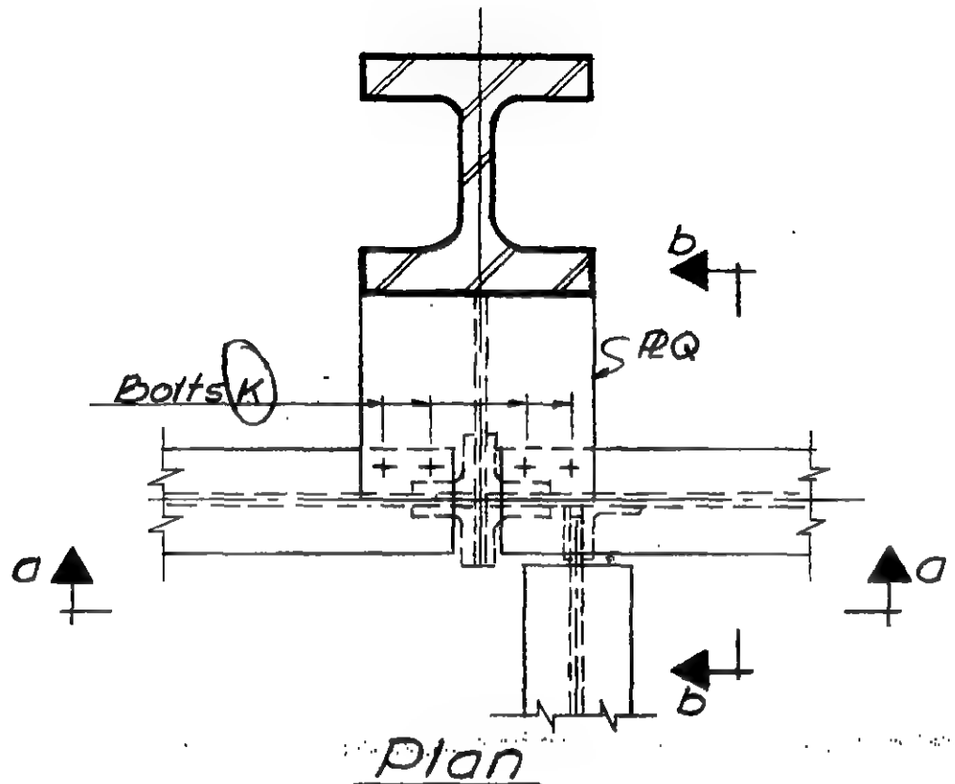

Plan

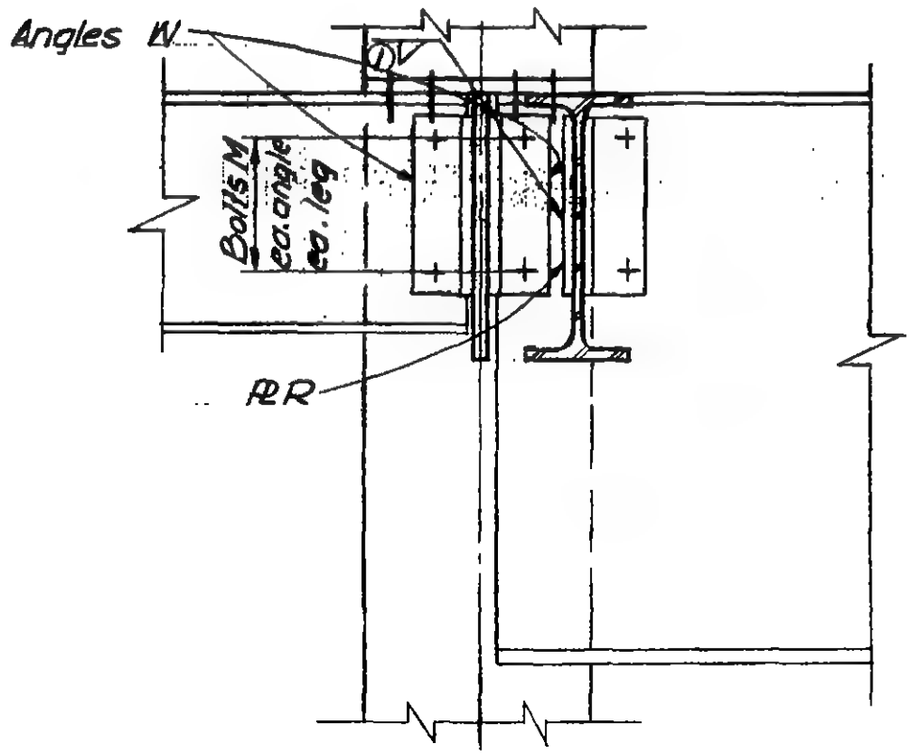

Section a-a

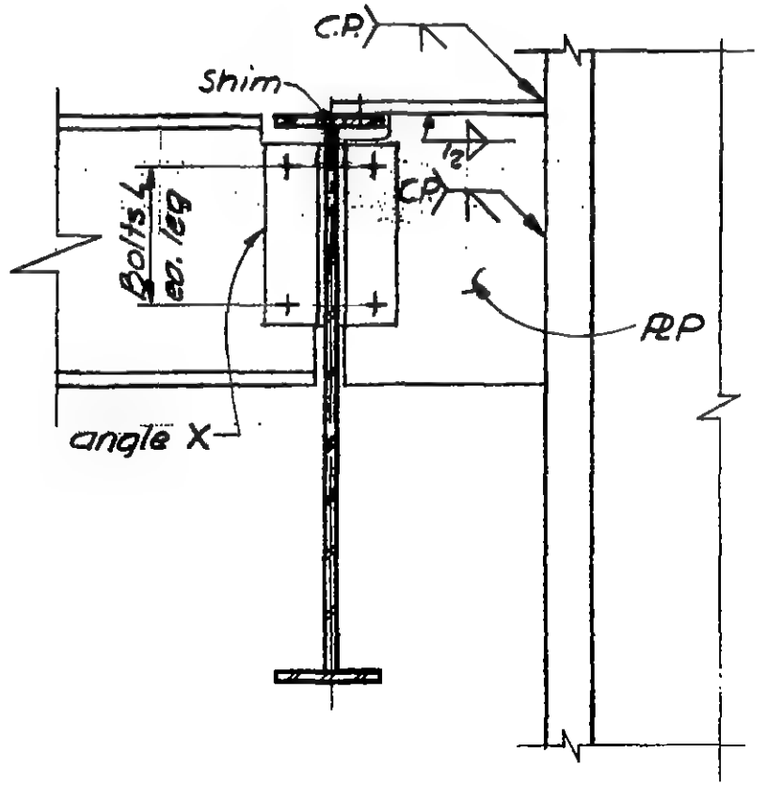

Section b-b

G-AB1-91

LICENSED PROFESSIONAL ENGINEER
LESLIE E. ROBERTSON
No. 34360
UNIVERSITY OF THE STATE OF NEW YORK

SKILLING - HELLE - CHRISTIANSEN - ROBERTSON Structural & Civil Engineers

PROJECT: THE WORLD TRADE CENTER | TITLE: SCHEDULE FOR DETAIL 284A | DATE: 9-15-67

REVISIONS
11-10-67

	284 A
PLATES	
P	1½"
Q	½"
R	⅜"
ANGLES	
W	4×3×⅜
X	4×3½×5/16
BOLTS	
K	4 - ¾" ϕ
L	4 - ¾" ϕ
M	4 - ⅞" ϕ
WELDS	
①	5/16

6-AB1-91.1

WORTHINGTON, SKILLING, HELLE & JACKSON — Civil & Structural Engineers

PROJECT: THE WORLD TRADE CENTER | TITLE: CONNECTION DETAIL 285 A | DATE: 5-22-67

REVISIONS
9-15-67
11-14-67

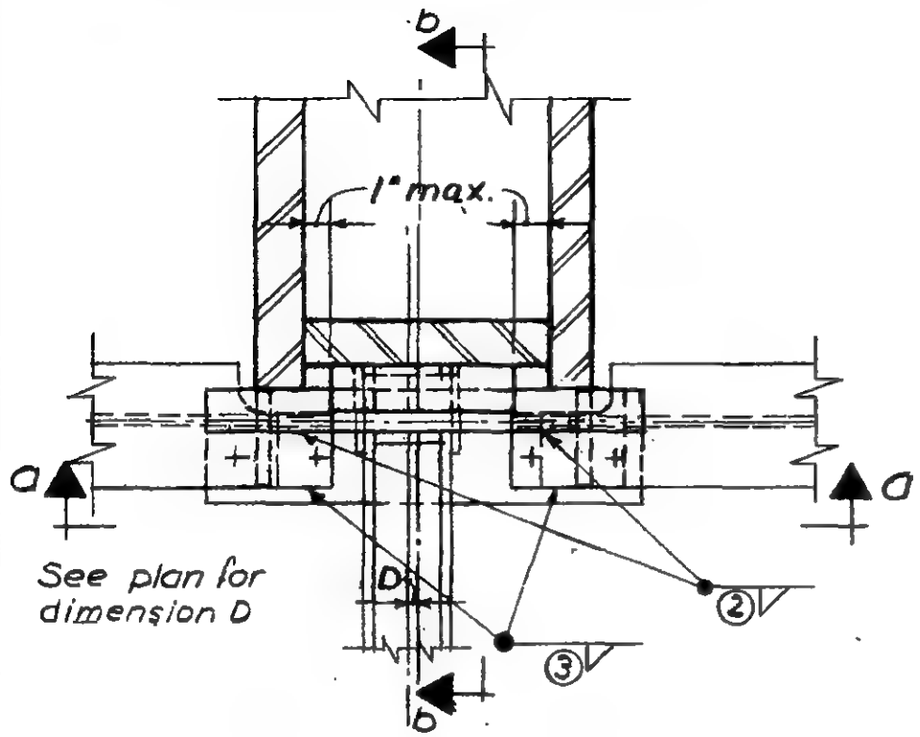

Plan

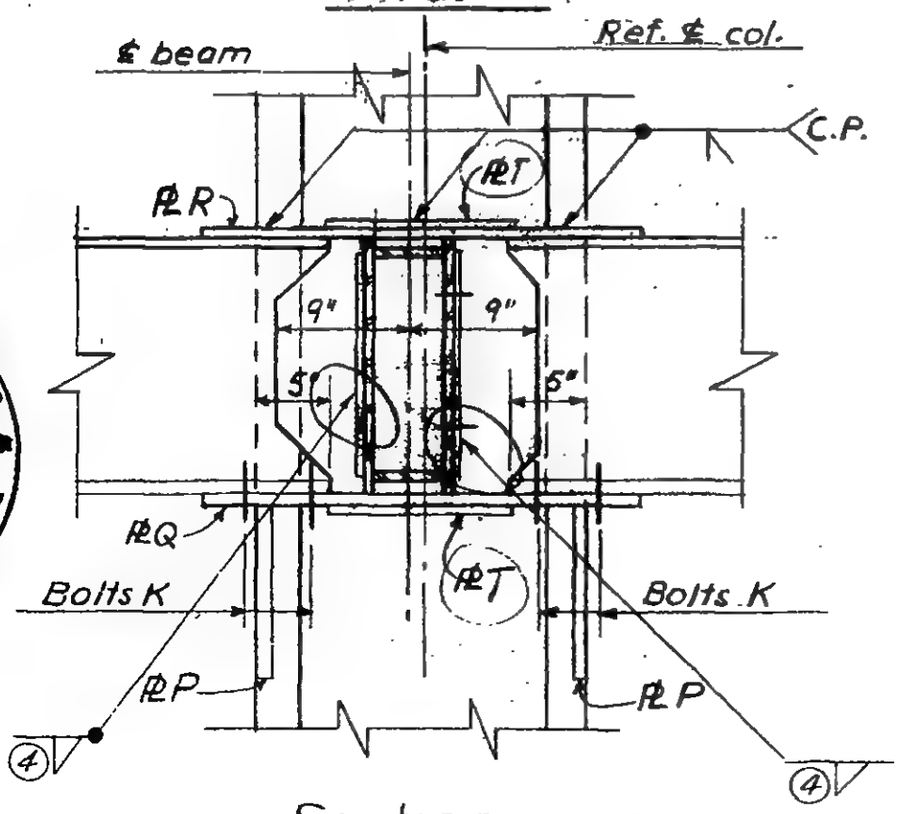

Section a-a

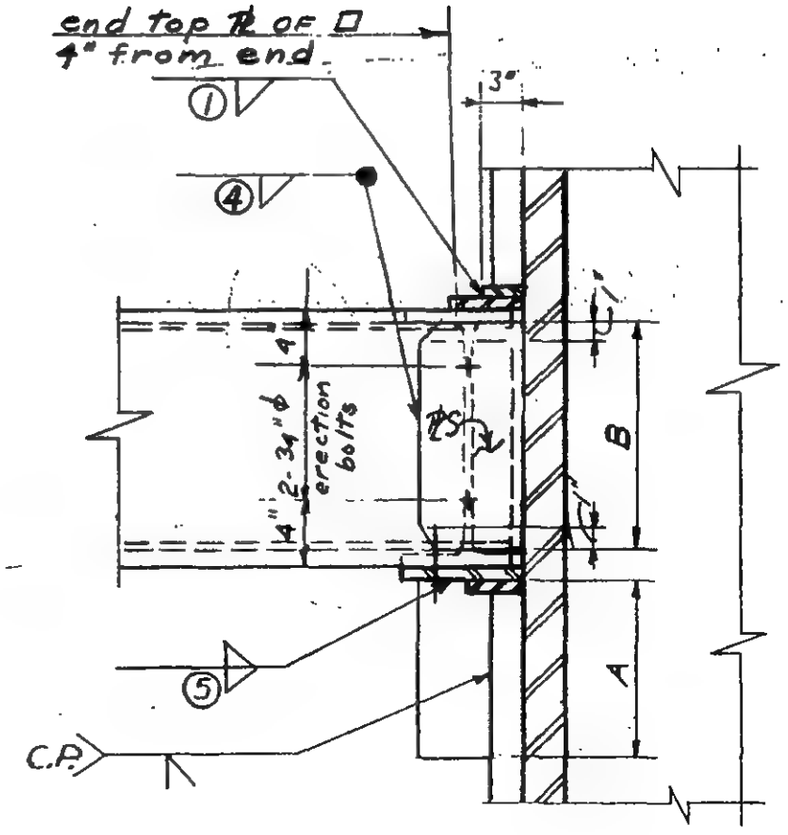

Section b-b

6-AB1-92

SKILLING - HELLE - CHRISTIANSEN - ROBERTSON Structural & Civil Engineers

PROJECT THE WORLD TRADE CENTER | TITLE SCHEDULE FOR DETAIL 285 A | DATE 9-15-67

REVISIONS

1 11-14-67

12-21-67

	285 A					
PLATES						
P	3/8"					
Q	1/2"					
R	1/2"					
S	1/2"					
T	1/2"					
DIMENSIONS						
A	1'-0"					
B	1'-2"					
BOLTS						
K	2-3/4" ϕ					
WELDS						
①	3/8					
②	3/8					
③	3/8					
④	1/2					
⑤	5/16					

6-AB1-92.1

WORTHINGTON, SKILLING, HELLE & JACKSON — Civil & Structural Engineers

PROJECT THE WORLD TRADE CENTER | TITLE CONNECTION DETAIL 286 A | DATE 5-22-67

REVISIONS

1-15-67

11-10-67

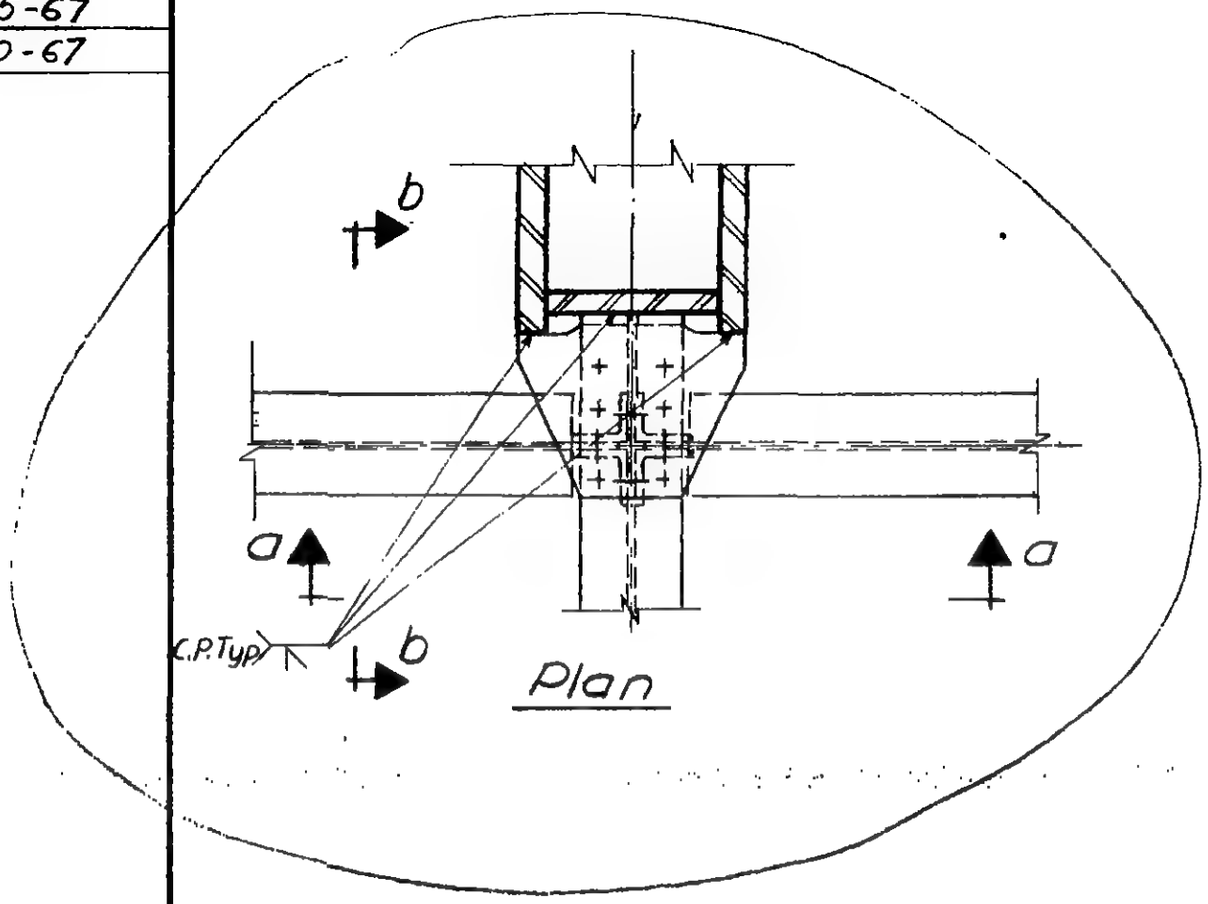

Plan

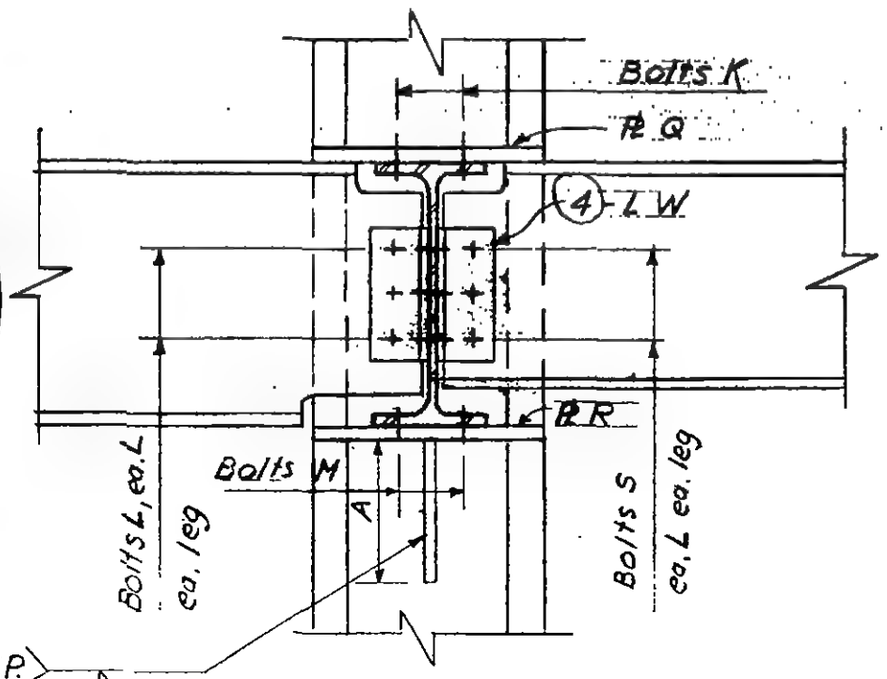

Section a-a

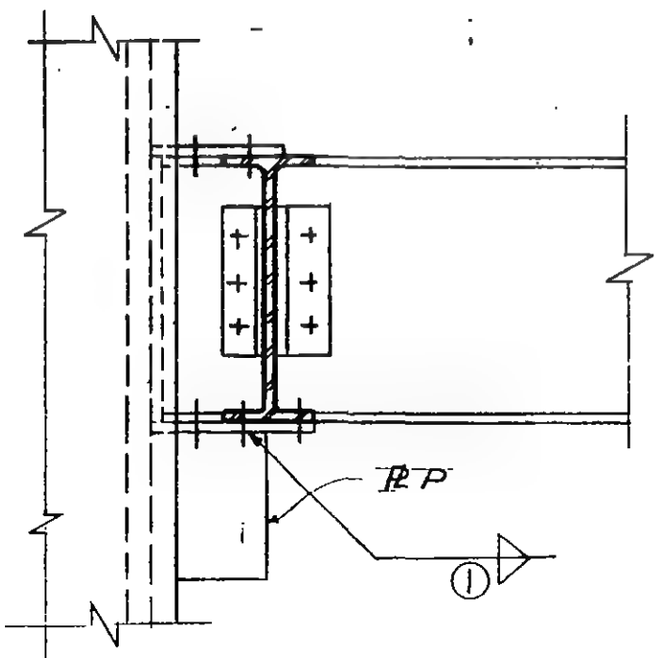

Section b-b

LICENSED PROFESSIONAL ENGINEER
LESLIE E. ROBERTSON
No. 34960
UNIVERSITY OF THE STATE OF NEW YORK

6-ABI-93

SKILLING - HELLE - CHRISTIANSEN - ROBERTSON Structural & Civil Engineers

PROJECT THE WORLD TRADE CENTER | TITLE SCHEDULE FOR DETAIL 286A, B | DATE 9-15-67

REVISIONS
10-2 67
11-10-67

	286A	286B
PLATES		
P	6" x 3/4"	10 x 1"
Q	1/2"	3/4"
R	7/8"	—
ANGLES		
W	4 x 3 1/2 x 5/16	—
X	4 x 4 x 5/16	—
BOLTS		
K	6 - 3/4" ϕ	6 - 7/8" ϕ
L	3 - 3/4" ϕ	2 - 7/8" ϕ
M	6 - 3/4" ϕ	—
DIMENSIONS		
A	1'-2"	1'-2"
WELDS		
(1)	5/16	5/16

LICENSED PROFESSIONAL ENGINEER
LESLIE E. ROBERTSON
No. 34360
UNIVERSITY OF THE STATE OF NEW YORK

6-AB1-93.1

SKILLING - HELLE - CHRISTIANSEN - ROBERTSON Structural & Civil Engineers

PROJECT THE WORLD TRADE CENTER | TITLE CONNECTION DETAIL 286 B | DATE 10-2-67

REVISIONS

12-21-67

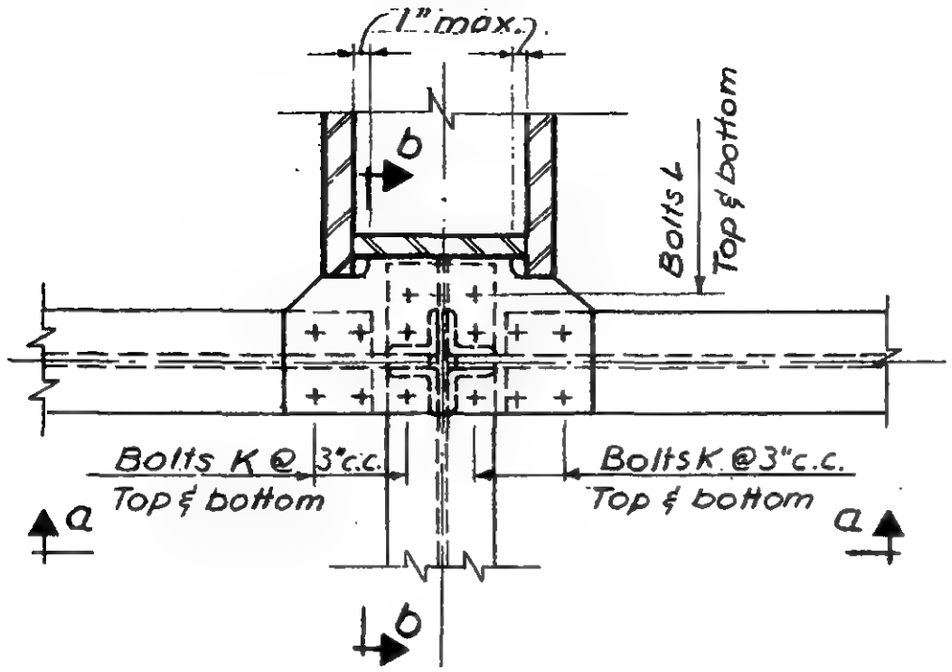

Plan

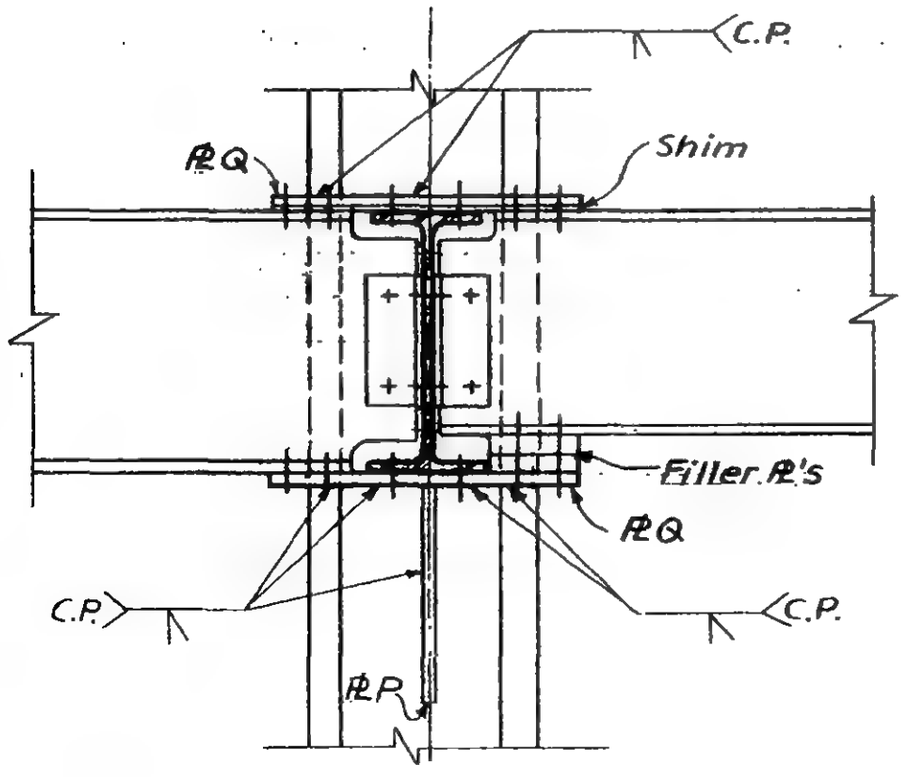

Section a-a

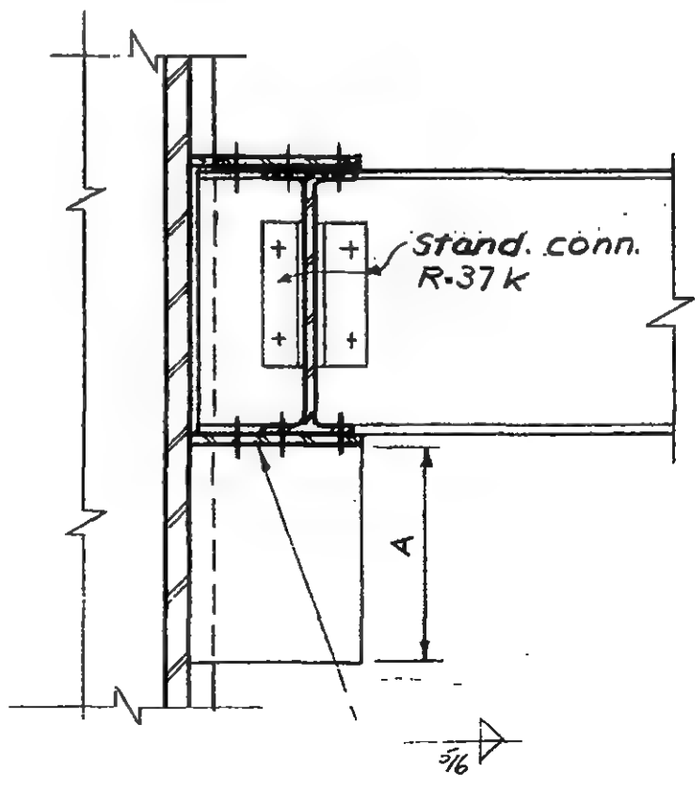

Section b-b

6-ABI-93.2

LICENSED PROFESSIONAL ENGINEER
LESLIE E. ROBERTSON
No. 34290
STATE OF NEW YORK

WORTHINGTON, SKILLING, HELLE & JACKSON — Civil & Structural Engineers

PROJECT: THE WORLD TRADE CENTER | TITLE: CONNECTION DETAIL 287 A&B | DATE: 5-9-67

REVISIONS

6-30-67
7-28-67

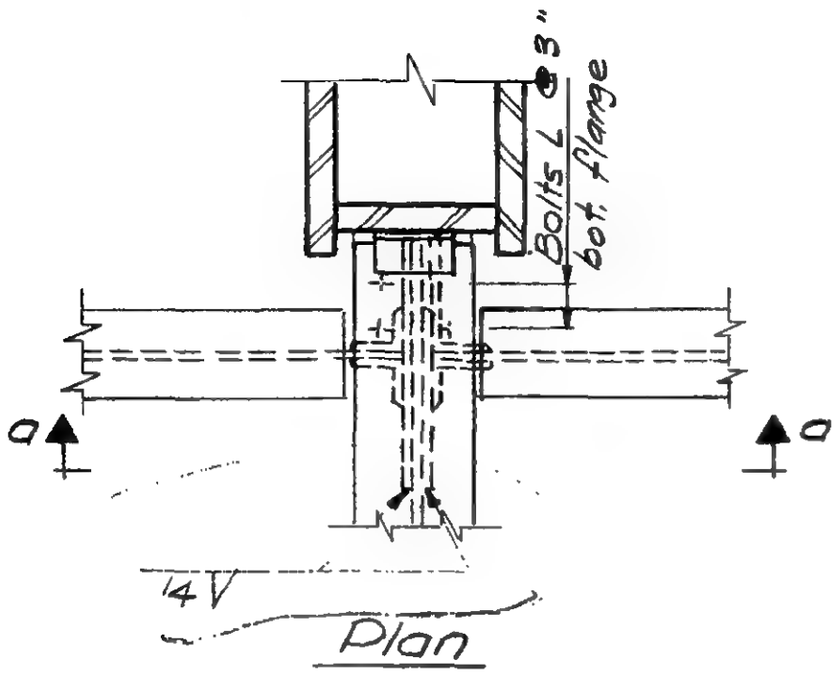

Plan

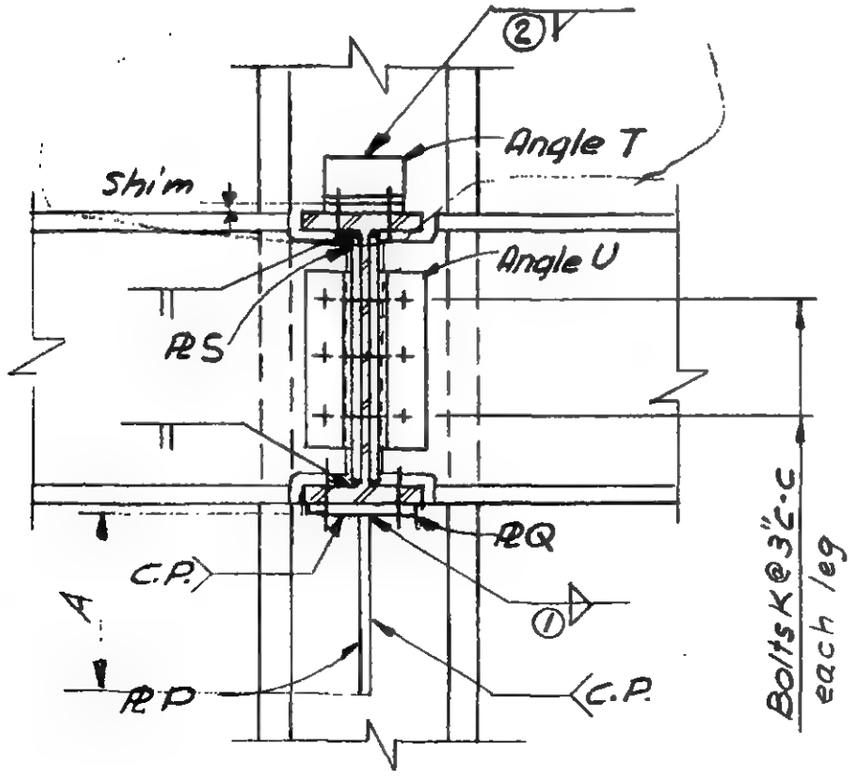

Section a-a

LICENSED PROFESSIONAL ENGINEER
LESLIE E. ROBERTSON
No. 34360
UNIVERSITY OF THE STATE OF NEW YORK

6-AB1-94

WORTHINGTON, SKILLING, HELLE & JACKSON — Civil & Structural Engineers

PROJECT THE WORLD TRADE CENTER | TITLE SCHEDULE FOR DETAIL 287 A, B | DATE 6-30-67

REVISIONS

7-28-67

	287 A	287 B
PLATES		
P	7½" × 15/16"	7" × 11/16"
Q	7½" × 15/16"	8" × 34"
S	2 PL ¼ × 1'-9"	2 PL 3/16 × 1'-6"
ANGLES		
T	4 × 4 × ¼ × 0'-8"	4 × 4 × ¼ × 0'-6"
U	4L - 4 × 3½ × 7/16 × 0'-8½"	4L - 4 × 3½ × 7/16 × 0'-8½"
DIMENSIONS		
A	1'-3"	1'-3"
BOLTS		
K	3-1" ϕ (A 325)	3-1" ϕ (A 325)
L	4-¾" ϕ (A 325)	4-¾" ϕ (A 325)
WELDS		
①	5/16	5/16
②	¼	¼

LICENSED PROFESSIONAL ENGINEER
LESLIE E. ROBERTSON
No. 34360
UNIVERSITY OF THE STATE OF NEW YORK

6-ABI-94.1

WORTHINGTON, SKILLING, HELLE & JACKSON — Civil & Structural Engineers

PROJECT THE WORLD TRADE CENTER | TITLE CONNECTION DETAIL 287-C, D, E, F, G, H | DATE 6-30-67

REVISIONS
7-28-67
8-5-67

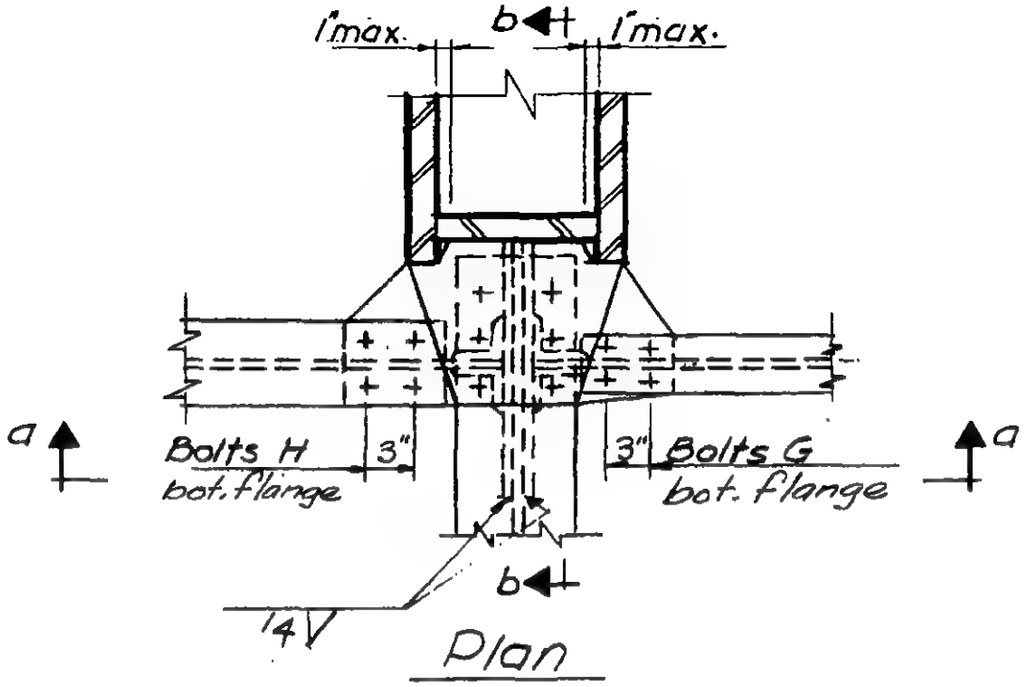

Plan

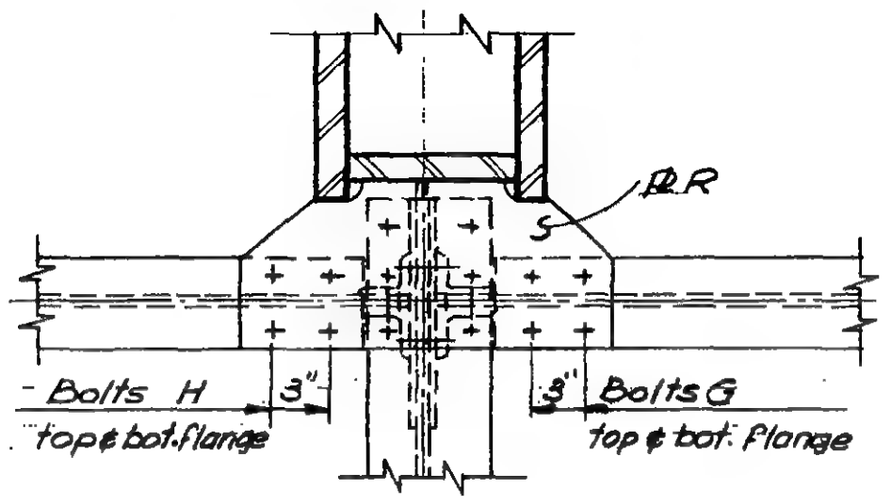

Plan
detail 287 G & H only

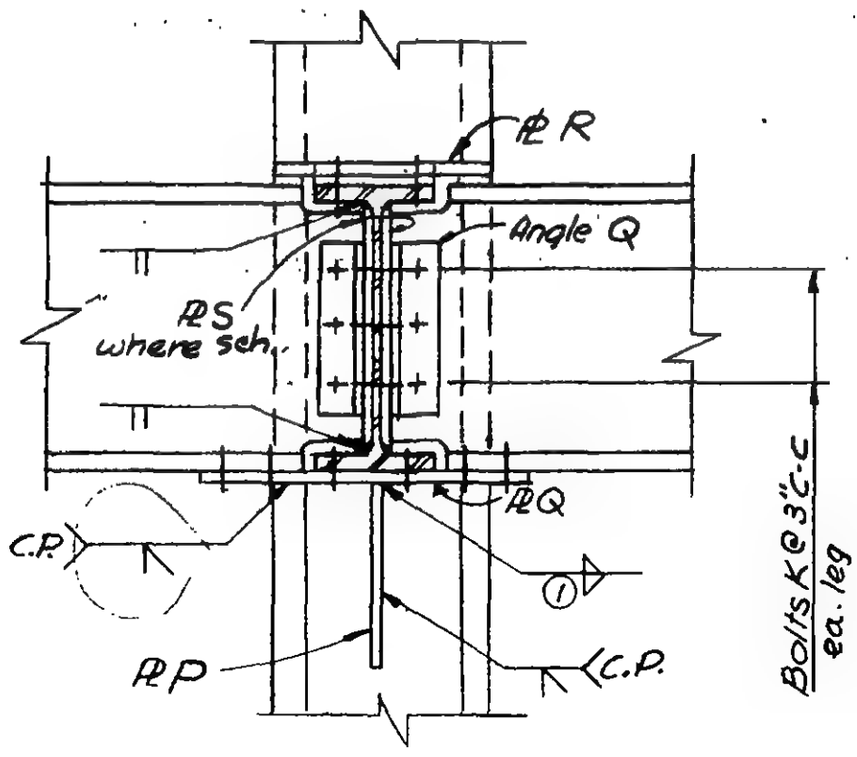

Section a-a

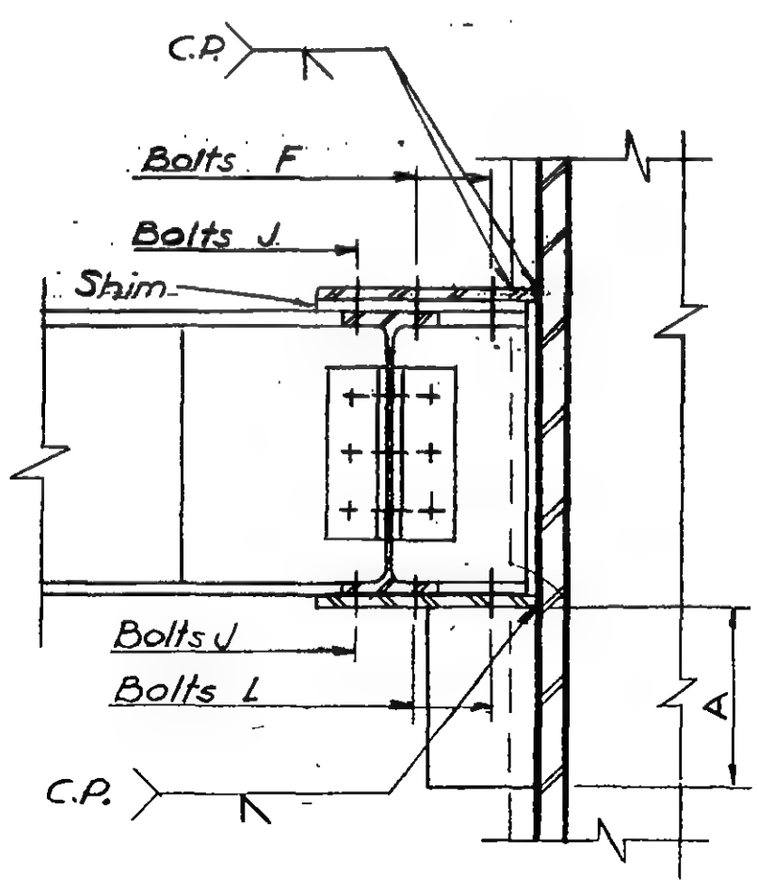

Section b-b

6-AB1-94.2

LICENSED PROFESSIONAL ENGINEER
LESLIE E. ROBERTSON
No. 34360
UNIVERSITY OF THE STATE OF NEW YORK

SKILLING - HELLE - CHRISTIANSEN - ROBERTSON Structural & Civil Engineers

PROJECT THE WORLD TRADE CENTER | TITLE SCHEDULE FOR DETAIL 287 C, D, E, F, G, H | DATE 6-30-67

REVISIONS
7-28-67
8-5-67
1-24-68

	287 C	287 D	287 E	287 F	287 G	287 H
PLATES						
P	8" x 7/8"	7" x 1/2"	6" x 5/8"	6" x 3/4"	6" x 3/4"	8" x 7/8"
Q	7/8"	1/2"	5/8"	3/4"	3/4"	7/8"
R	5/8"	1/2"	5/8"	3/4"	3/4"	3/4"
S	2 PL - 3/16" x 1'-6"	—	—	—	—	—
ANGLES						
Q	4L - 4 x 3 1/2 x 7/16 x 0'-8 1/2"	4L - 4 x 3 1/2 x 5/16 x 0'-8 1/2"	4 x 3 1/2 x 5/16	4 x 3 1/2 x 5/16	4 x 3 1/2 x 5/16	4 x 3 1/2 x 5/16
DIMENSIONS						
A	1'-3"	1'-3"	1'-0"	1'-4"	1'-2"	1'-2"
BOLTS						
F	4 - 1 1/8" ϕ (A325) @ 3 3/4"	6 - 1 1/8" ϕ (A325) @ 3"	4 - 3/4" ϕ	4 - 1" ϕ	4 - 3/4" ϕ	4 - 3/4" ϕ
G	4 - 3/4" ϕ (A325)	4 - 3/4" ϕ (A325)	4 - 3/4" ϕ	4 - 7/8" ϕ	4 - 1 1/8" ϕ	4 - 3/4" ϕ
H	4 - 3/4" ϕ (A325)	4 - 3/4" ϕ (A325)	4 - 3/4" ϕ	4 - 7/8" ϕ	4 - 1 1/8" ϕ	4 - 3/4" ϕ
J	2 - 1 1/8" ϕ (A325)	—	2 - 3/4" ϕ	2 - 1" ϕ	2 - 3/4" ϕ	2 - 3/4" ϕ
K	3 - 1" ϕ (A325)	3 - 3/4" ϕ (A325)	3 - 3/4" ϕ	3 - 3/4" ϕ	3 - 1" ϕ	3 - 1" ϕ
L	4 - 1 1/8" ϕ (A325) @ 3 3/4"	6 - 1 1/8" ϕ (A325) @ 3"	4 - 3/4" ϕ	4 - 1" ϕ	4 - 3/4" ϕ	4 - 3/4" ϕ
WELDS						
(1)	5/16	5/16	5/16	3/8	3/8	3/8

LICENSED PROFESSIONAL ENGINEER
LESLIE E. ROBERTSON
No. 34360
UNIVERSITY OF THE STATE OF NEW YORK

6-AB1-94.3

WORTHINGTON, SKILLING, HELLE & JACKSON — Civil & Structural Engineers

PROJECT: THE WORLD TRADE CENTER | TITLE: CONNECTION DETAIL 288 A | DATE: 5-22-67

REVISIONS

10-2-67

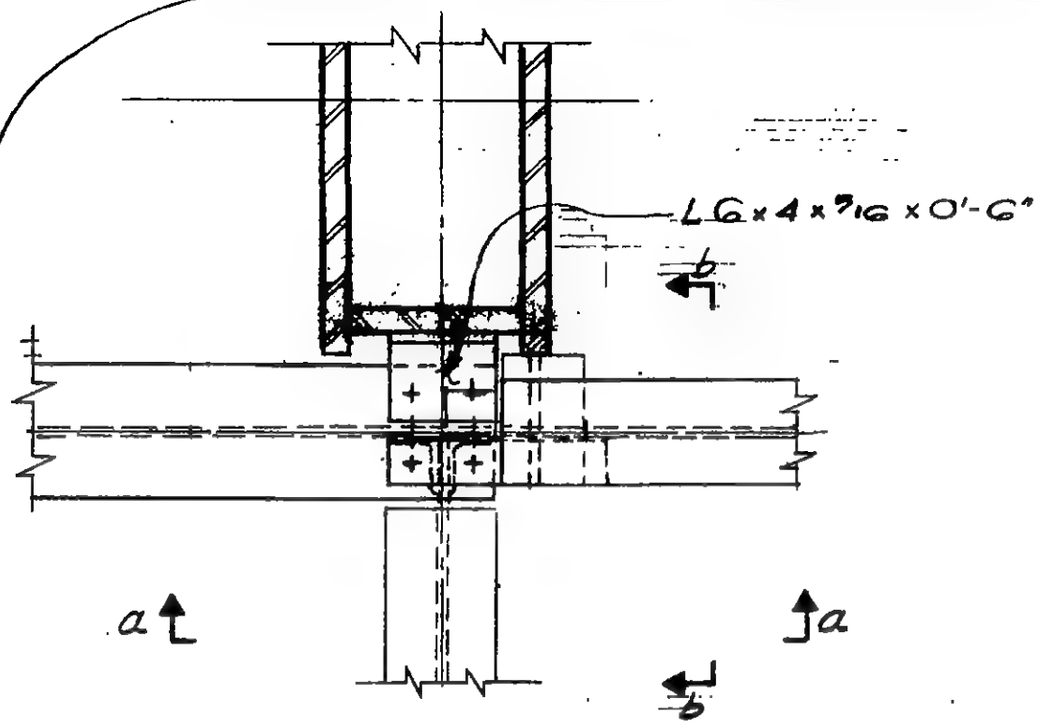

Plan

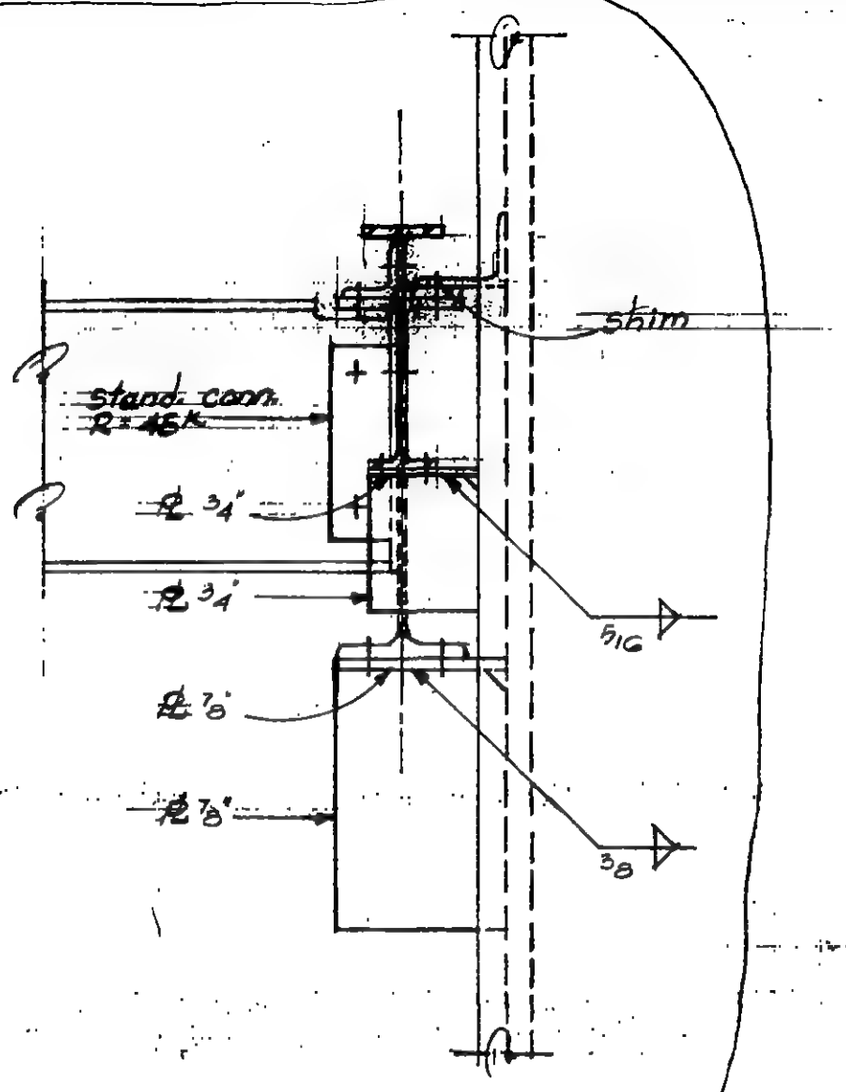

Section b-b

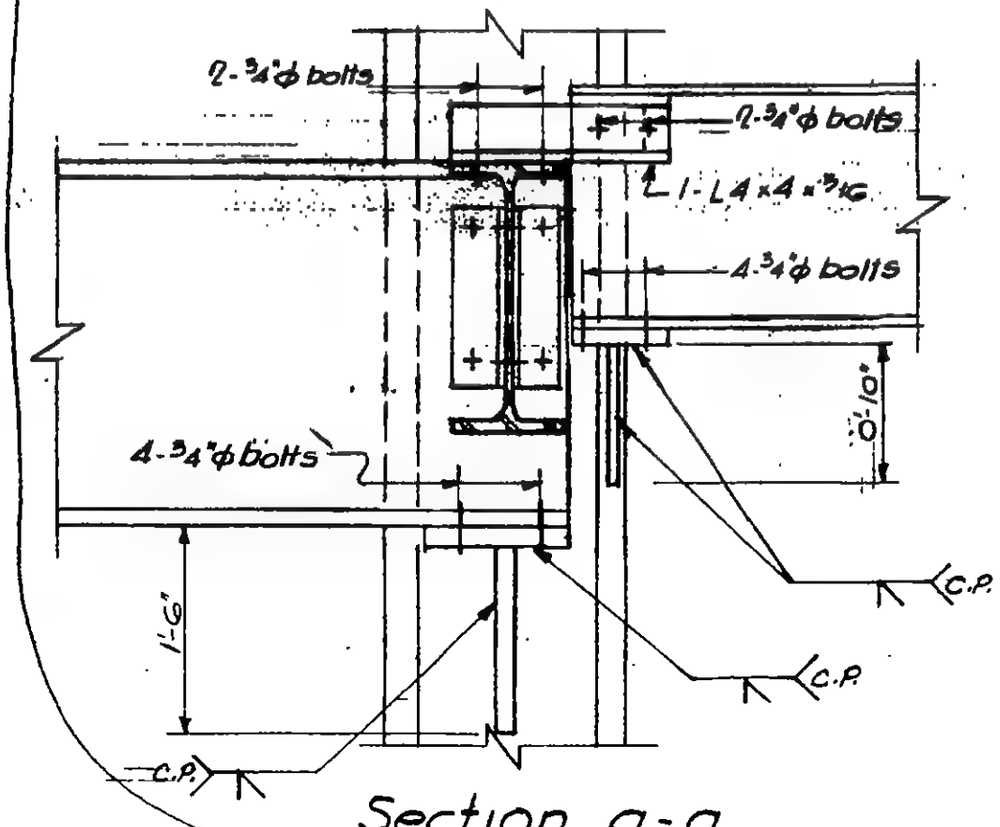

Section a-a

LICENSED PROFESSIONAL ENGINEER
LESLIE E. ROBERTSON
No. 34360
UNIVERSITY OF THE STATE OF NEW YORK

6-AB1-95

WORTHINGTON, SKILLING, HELLE & JACKSON — Civil & Structural Engineers

PROJECT: WORLD TRADE CENTER | TITLE: CONNECTION DETAIL 239 | DATE: 7/20/67

REVISIONS

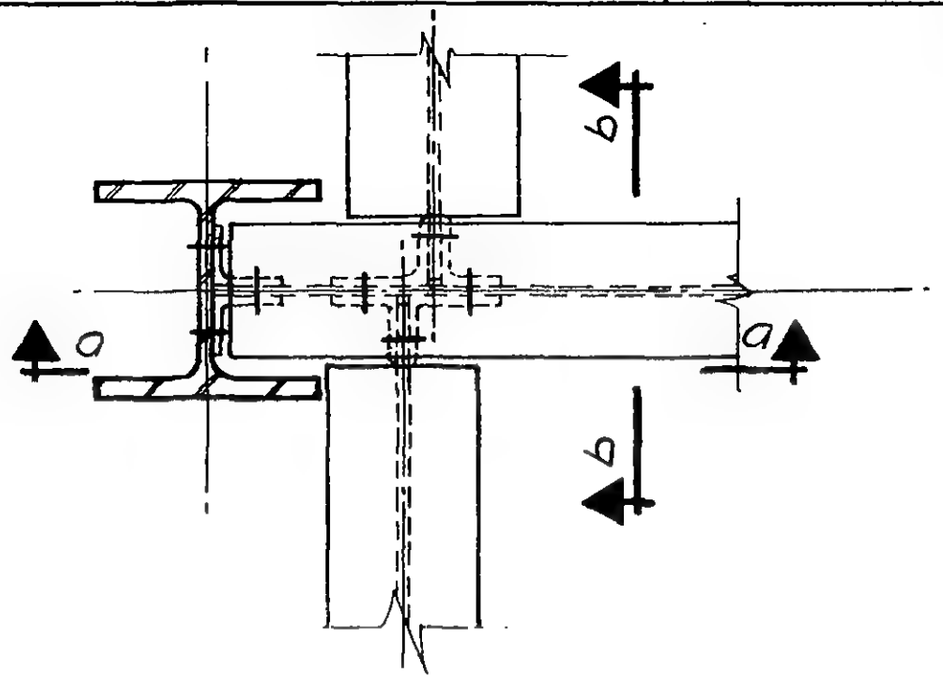

PLAN

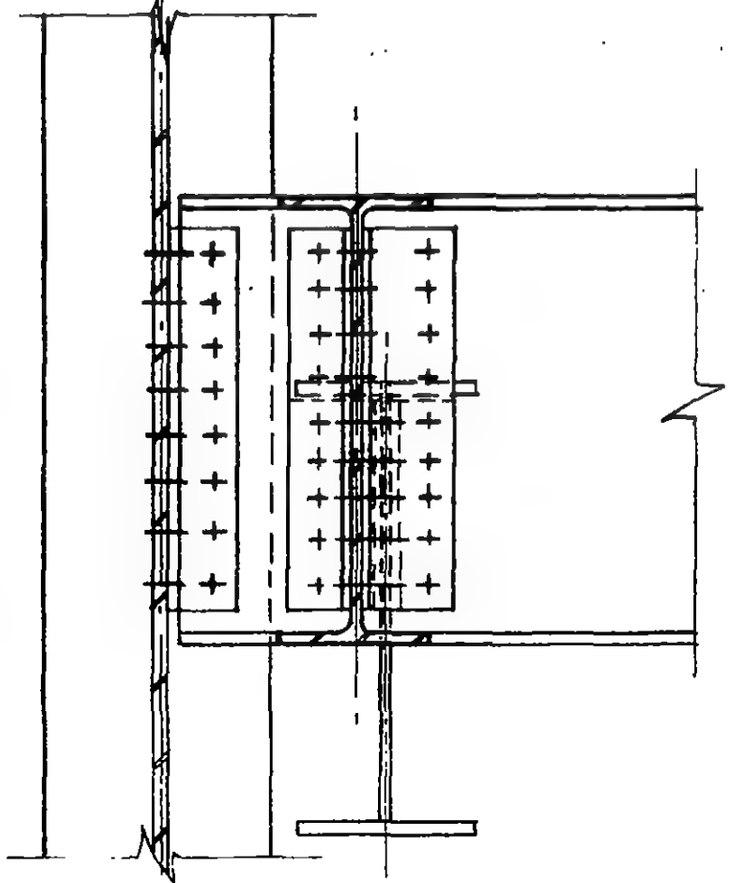

SECTION a-a

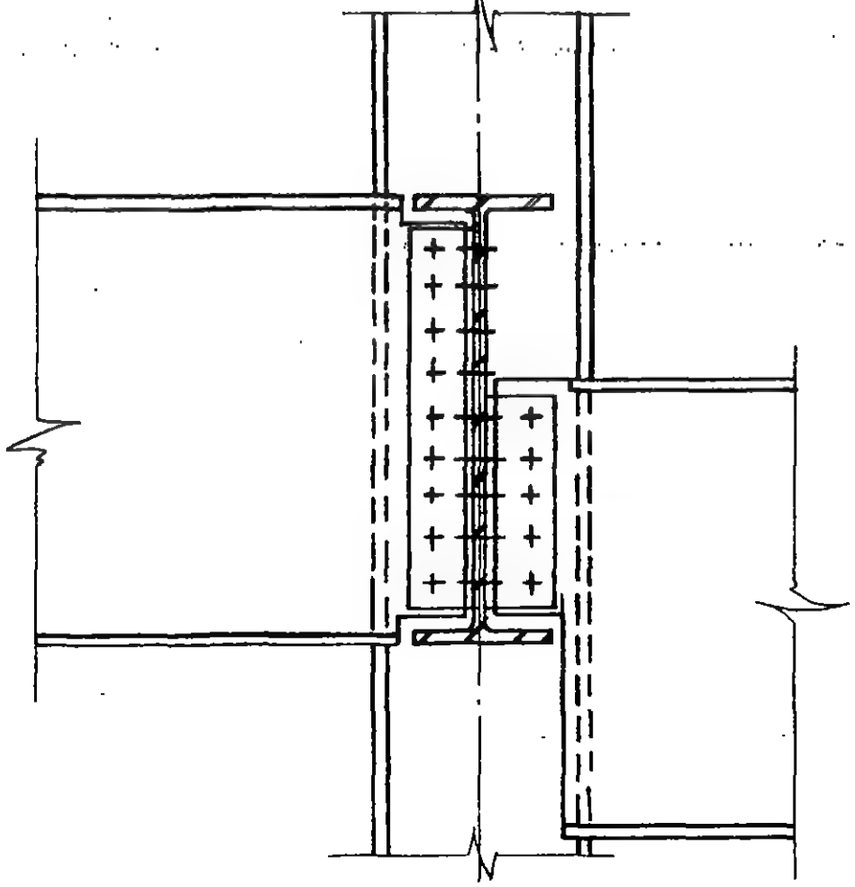

SECTION b-b

LEONARD E. ROBERTSON
No. 34360
REGISTERED PROFESSIONAL ENGINEER
THE STATE OF NEW YORK

G-AB1-96

WORTHINGTON, SKILLING, HELLE & JACKSON — Civil & Structural Engineers

PROJECT: THE WORLD TRADE CENTER | TITLE: CONNECTION DETAIL 290A | DATE: 6-30-67

REVISIONS

10-5-67

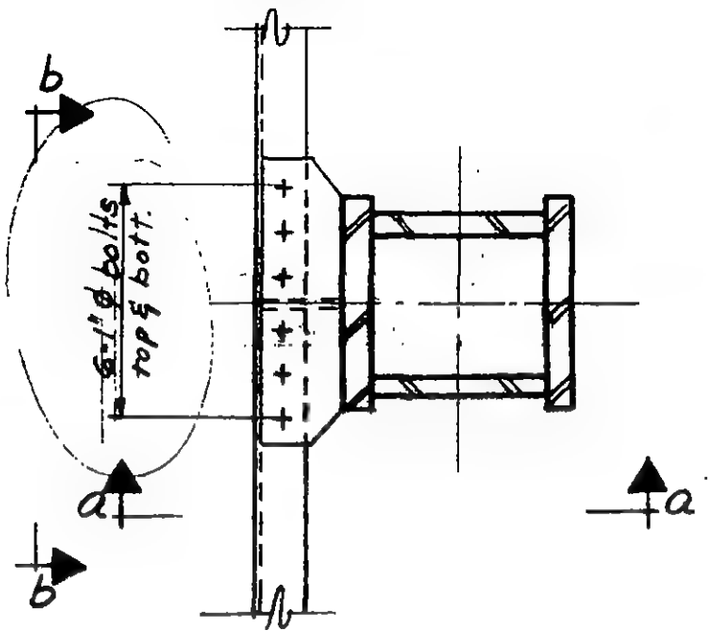

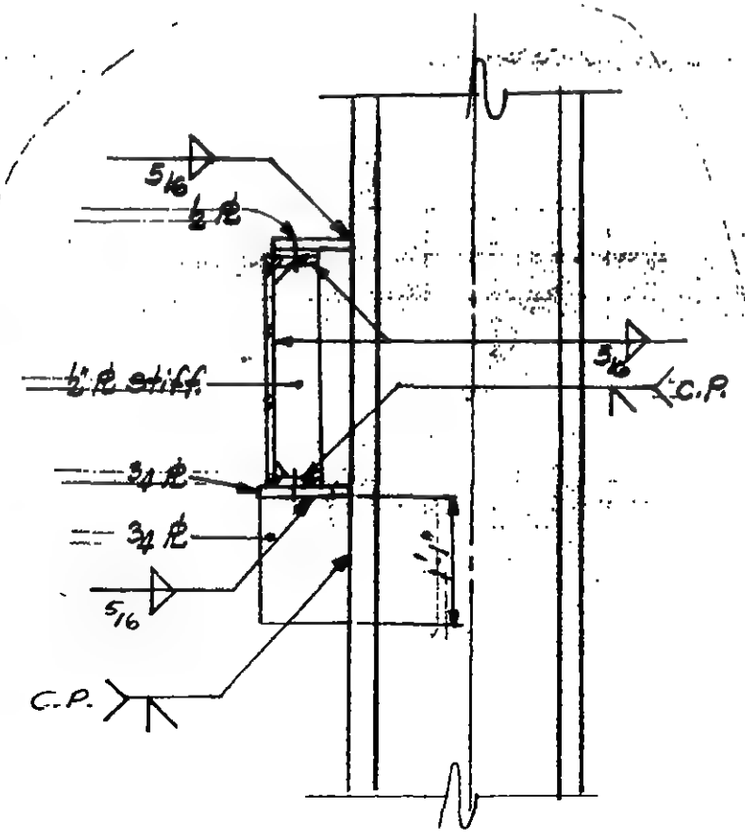

SECTION a-a

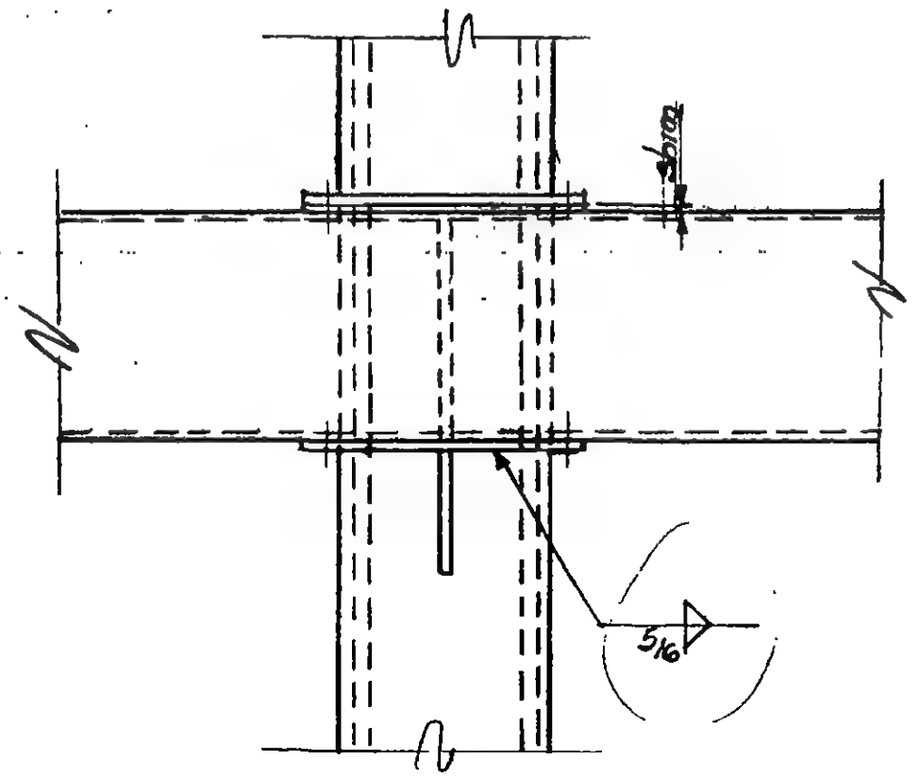

SECTION b-b

LICENSED PROFESSIONAL ENGINEER
LESLIE E. ROBERTSON
No. 34960
UNIVERSITY OF THE STATE OF NEW YORK

G-ABI-97

WORTHINGTON, SKILLING, HELLE & JACKSON — Civil & Structural Engineers

PROJECT: THE WORLD TRADE CENTER | TITLE: CONNECTION DETAIL 29T A | DATE: 6-5-69

REVISIONS

10-2-67

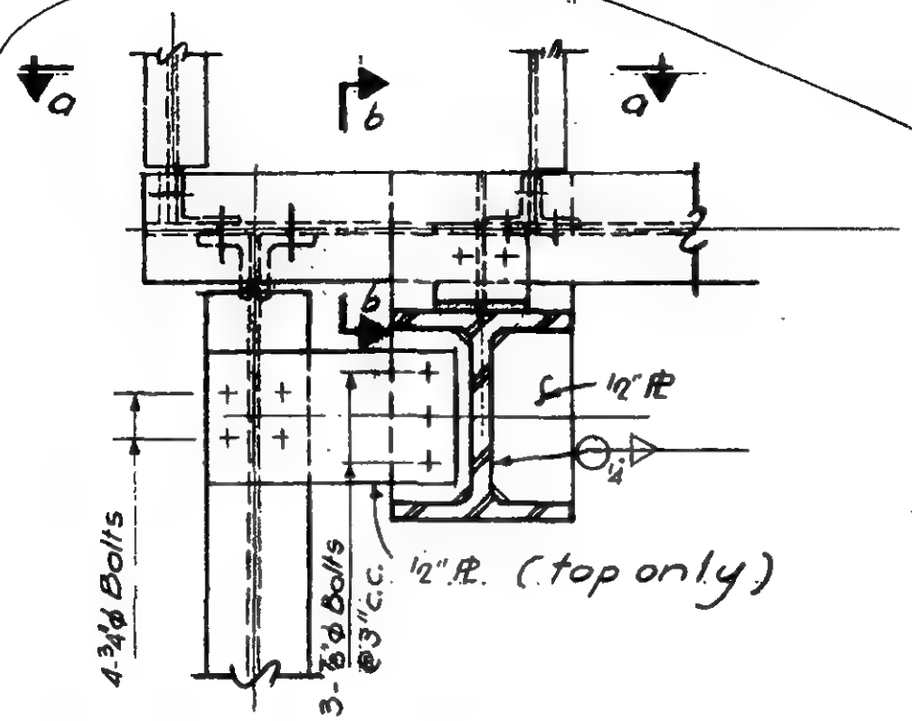

Plan

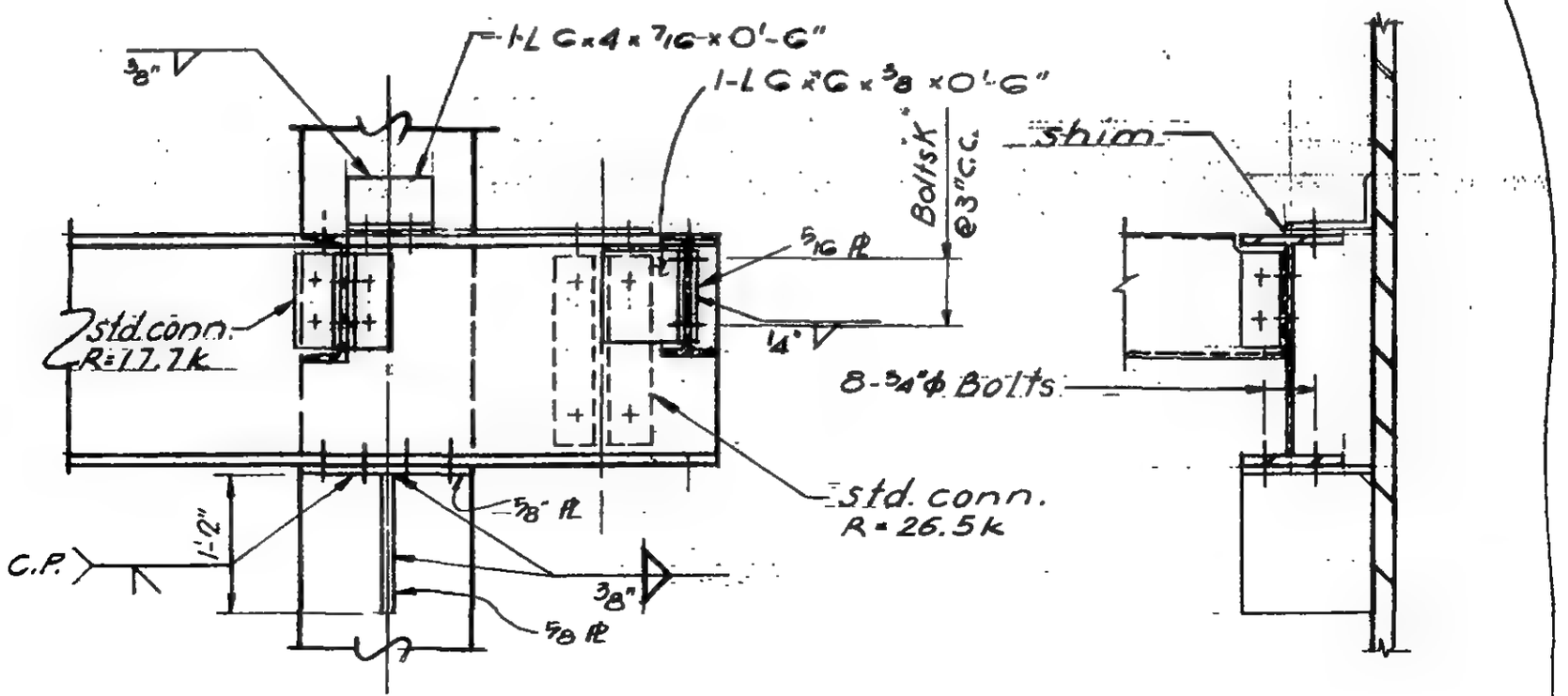

Section a-a

Section b-b

6-ABI-98

LICENSED PROFESSIONAL ENGINEER — LESLIE E. ROBERTSON — No. 34360 — UNIVERSITY OF THE STATE OF NEW YORK

SKILLING – HELLE – CHRISTIANSEN – ROBERTSON Structural & Civil Engineers

PROJECT THE WORLD TRADE CENTER | TITLE CONNECTION DETAIL 2 [illegible] | DATE 9-15-67

REVISIONS
11-10-67

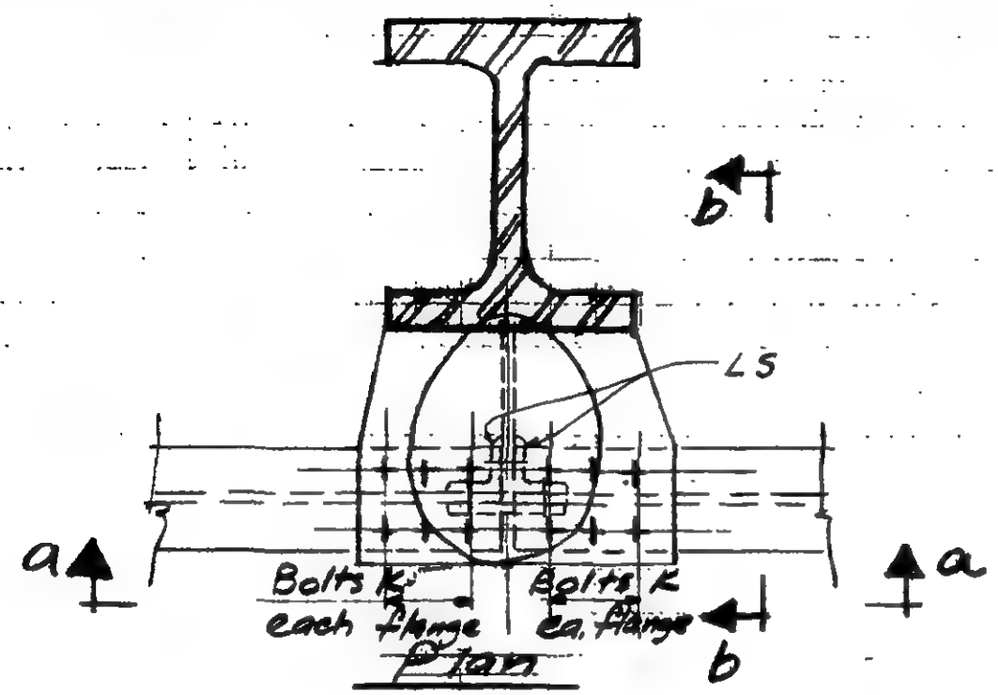

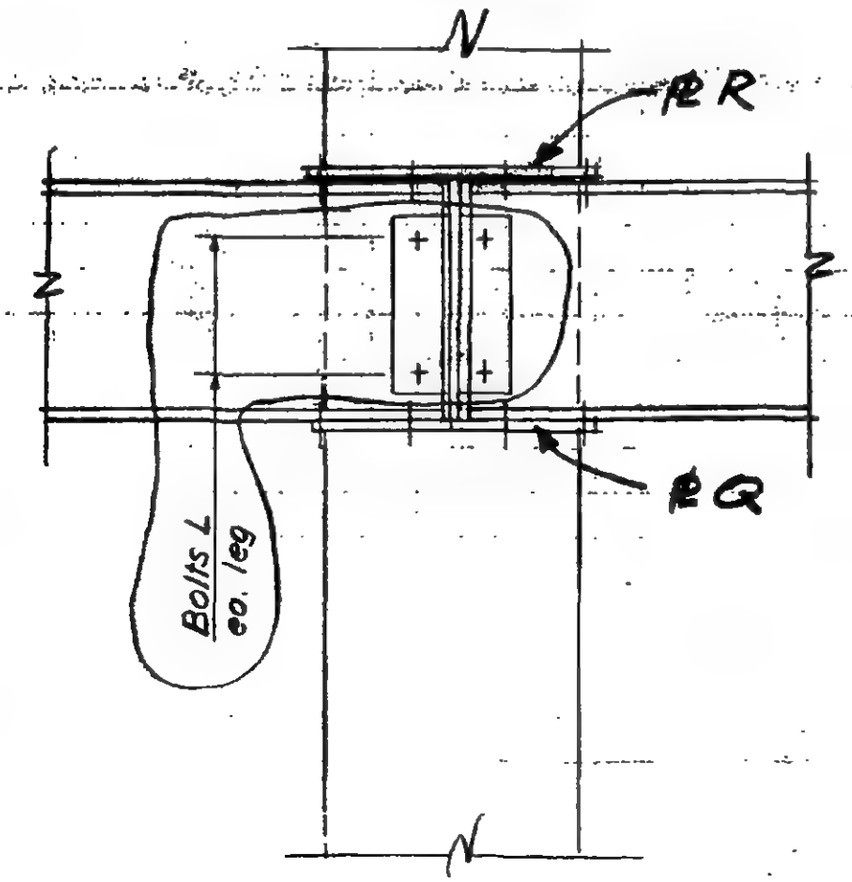

Section a-a

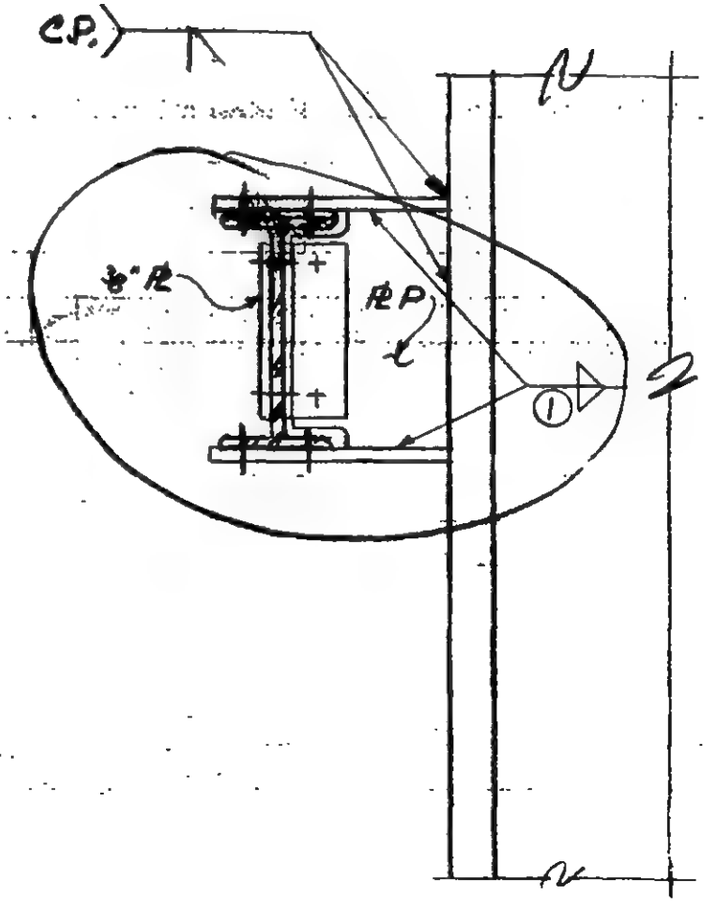

Section b-b

LICENSED PROFESSIONAL ENGINEER
LESLIE E. ROBERTSON
No. 34300
UNIVERSITY OF THE STATE OF NEW YORK

6-AB1-99

SKILLING - HELLE - CHRISTIANSEN - ROBERTSON Structural & Civil Engineers

PROJECT THE WORLD TRADE CENTER TITLE SCHEDULE FOR DETAIL 292 A DATE 9-15-67

REVISIONS

11-10-67

	292A
PLATE	
P	1"
Q	3/4"
R	5/8"
ANGLE	
S	4 x 3½ x 5/16
BOLT	
K	6-⅞" ϕ
L	4-¾" ϕ
WELD	
O	3/8

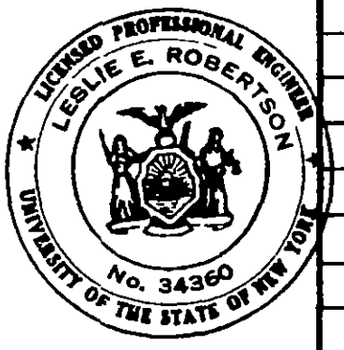

6-AB1-99.1

SKILLING - HELLE - CHRISTIANSEN - ROBERTSON Structural & Civil Engineers

PROJECT THE WORLD TRADE CENTER | TITLE CONNECTION DETAIL 292 C | DATE 10-2-67

REVISIONS
11-17-67

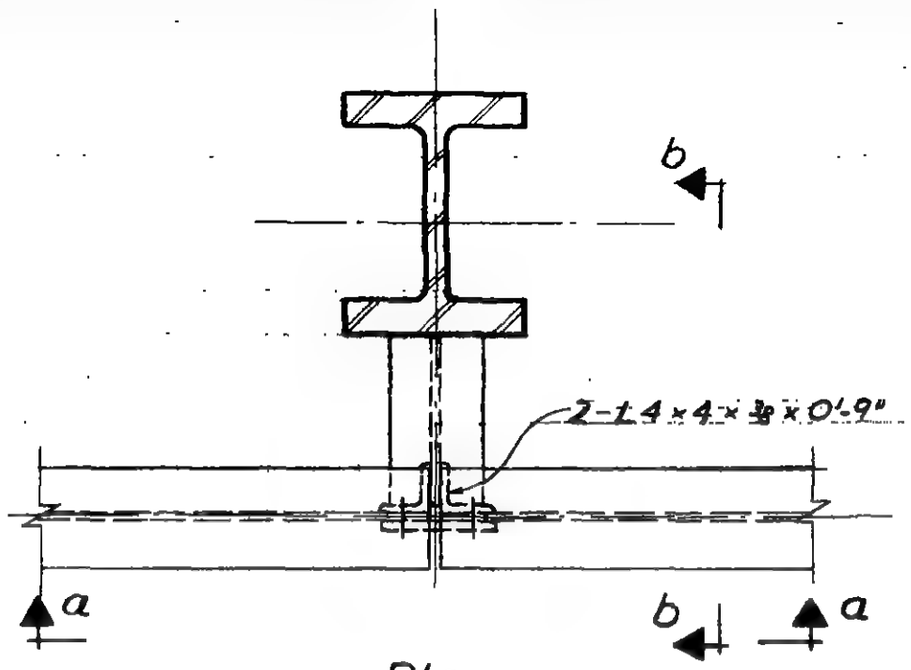

Plan

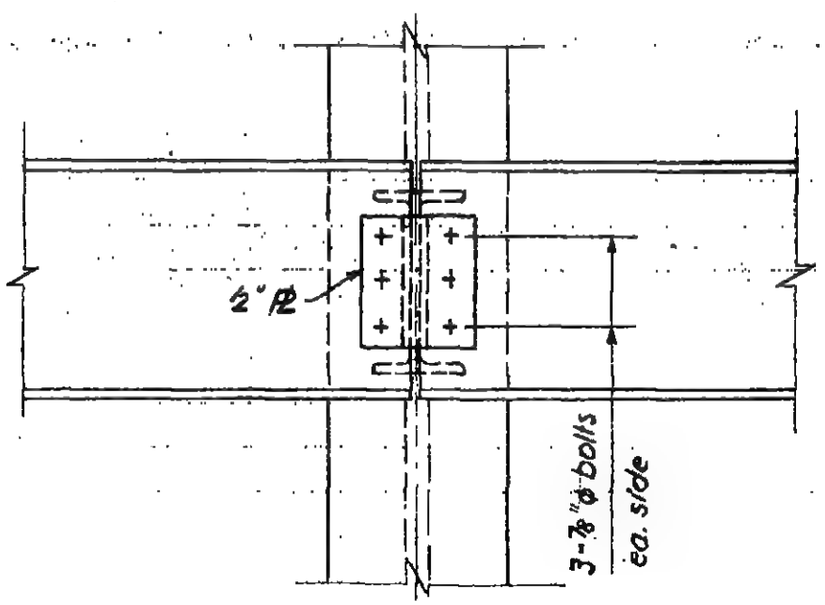

Section a-a

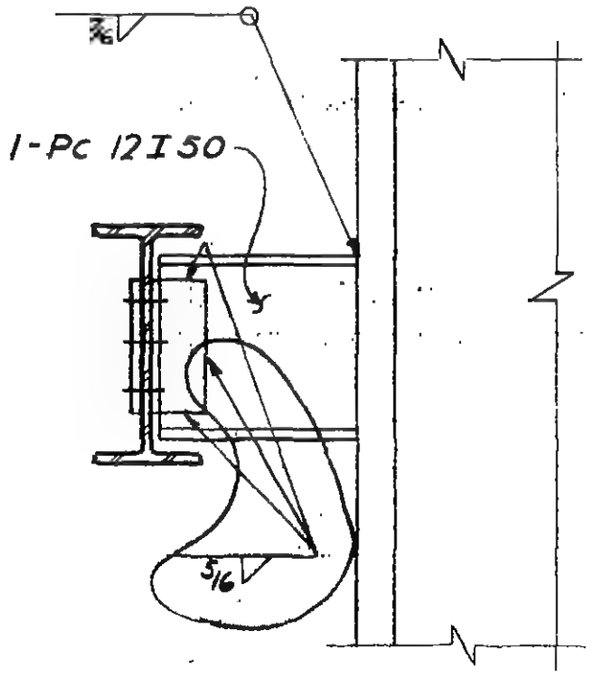

Section b-b

LICENSED PROFESSIONAL ENGINEER
LESLIE E. ROBERTSON
No. 34360
UNIVERSITY OF THE STATE OF NEW YORK

6-AB1-99.2

SKILLING -- HELLE -- CHRISTIANSEN -- ROBERTSON — Structural & Civil Engineers

PROJECT THE WORLD TRADE CENTER | TITLE CONNECTION DETAIL 299 B | DATE 10-5-67

REVISIONS

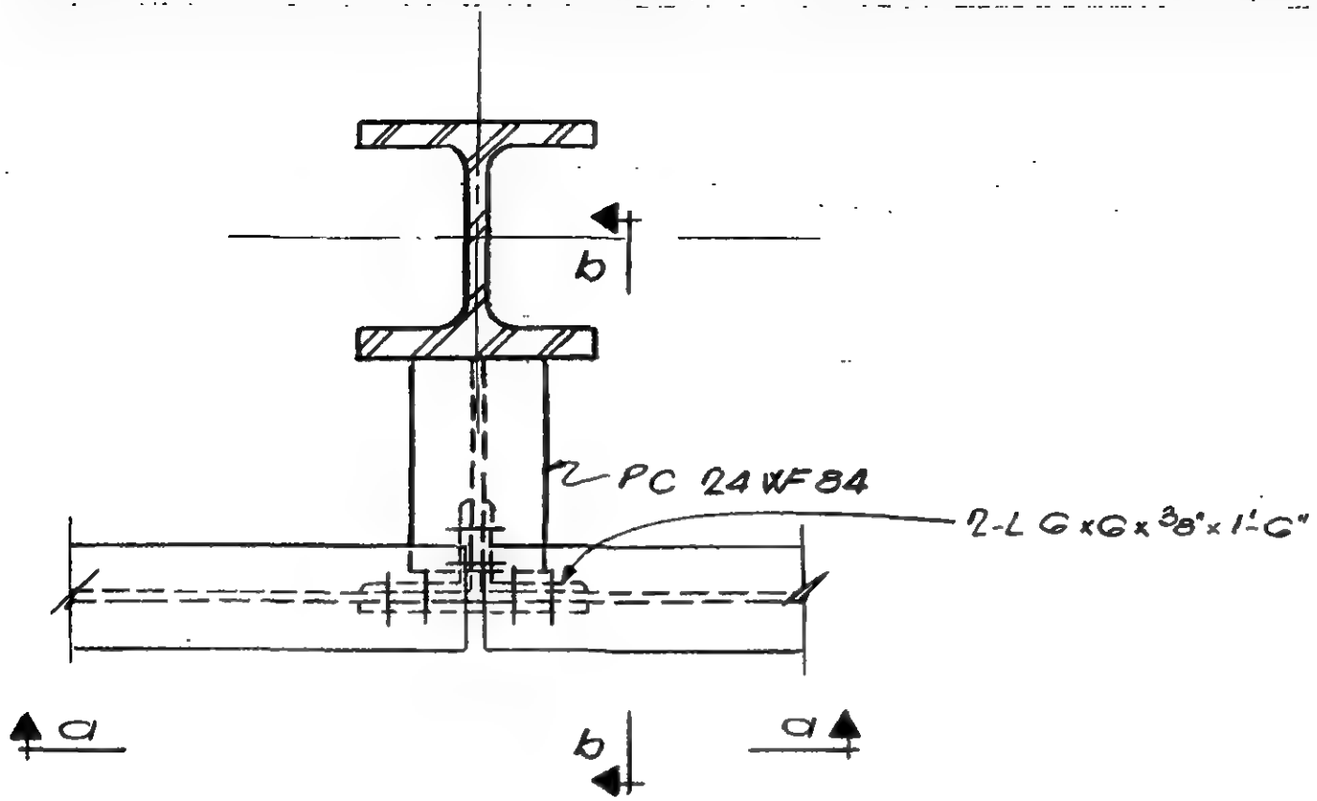

Plan

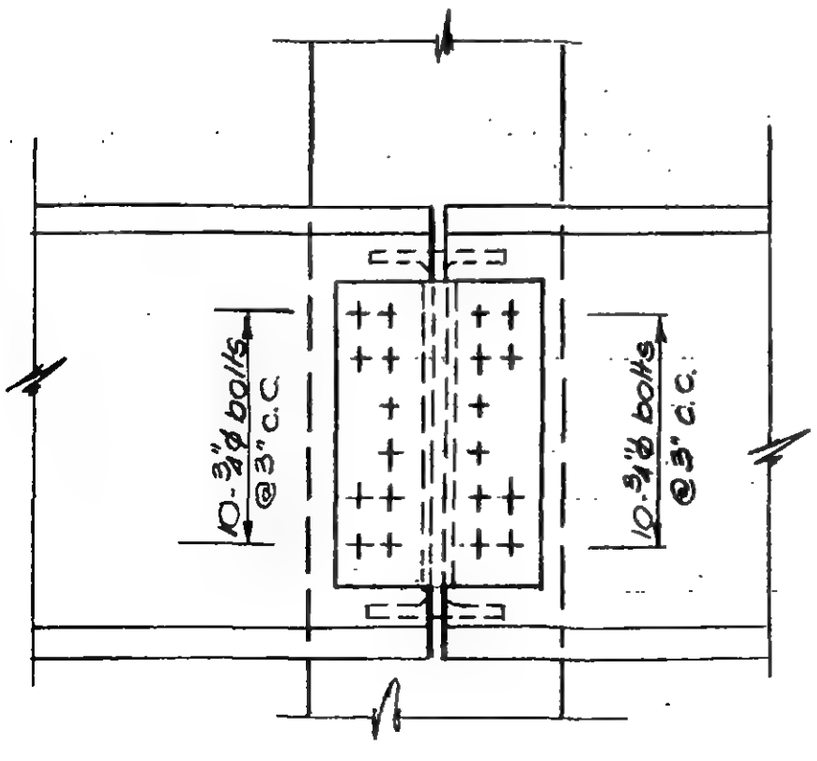

Section a-a.

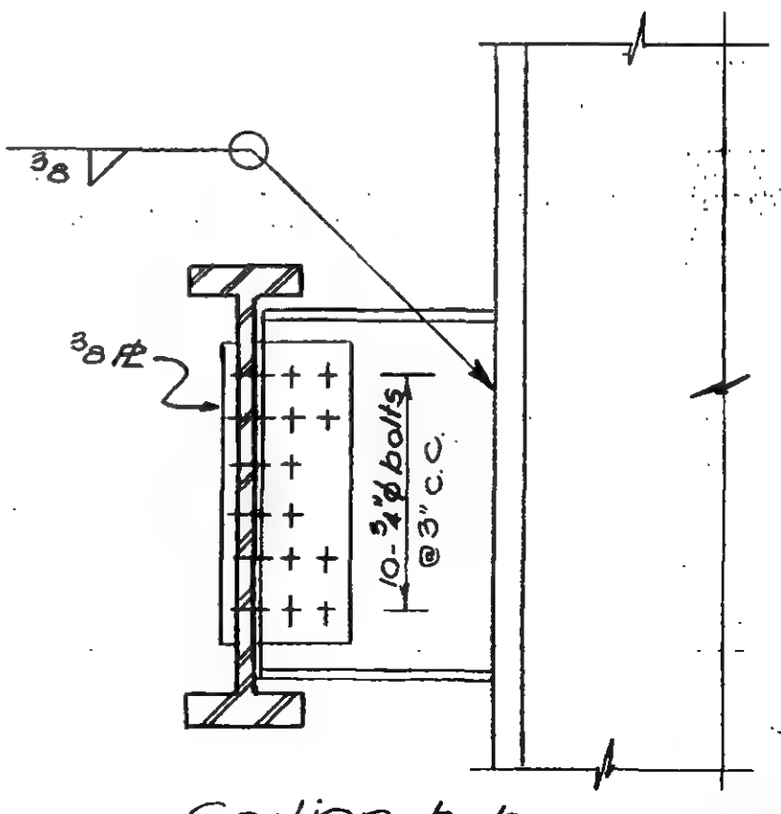

Section b-b

LICENSED PROFESSIONAL ENGINEER LESLIE E. ROBERTSON No. 34240 STATE OF NEW YORK

G-ABT-99.3

SKILLING - HELLE - CHRISTIANSEN - ROBERTSON — Structural & Civil Engineers

PROJECT THE WORLD TRADE CENTER | TITLE CONNECTION DETAILS 225 A | DATE 4-30-67

REVISIONS

10-5-67

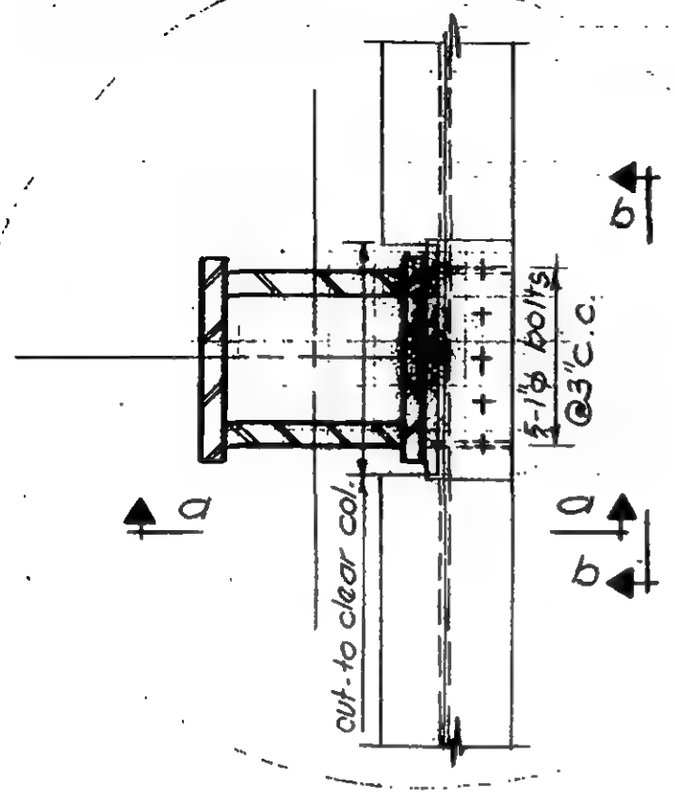

Plan

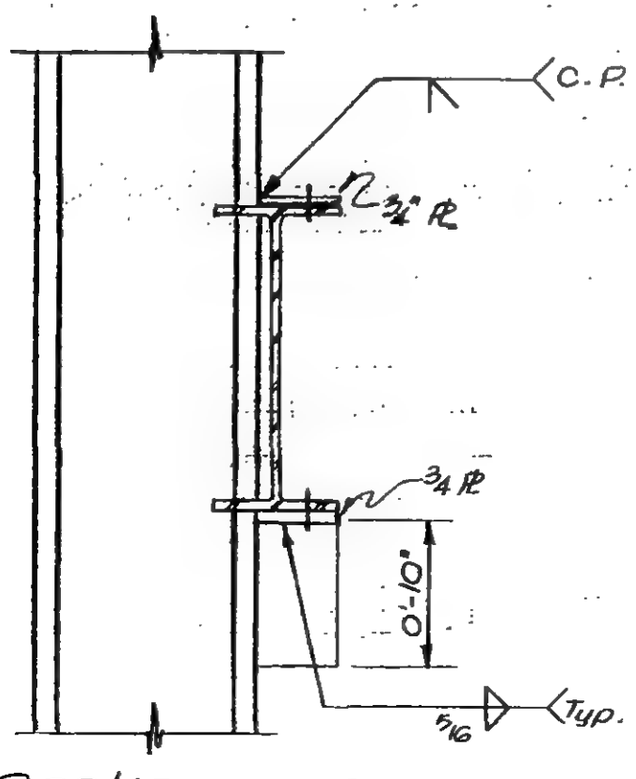

Section a-a

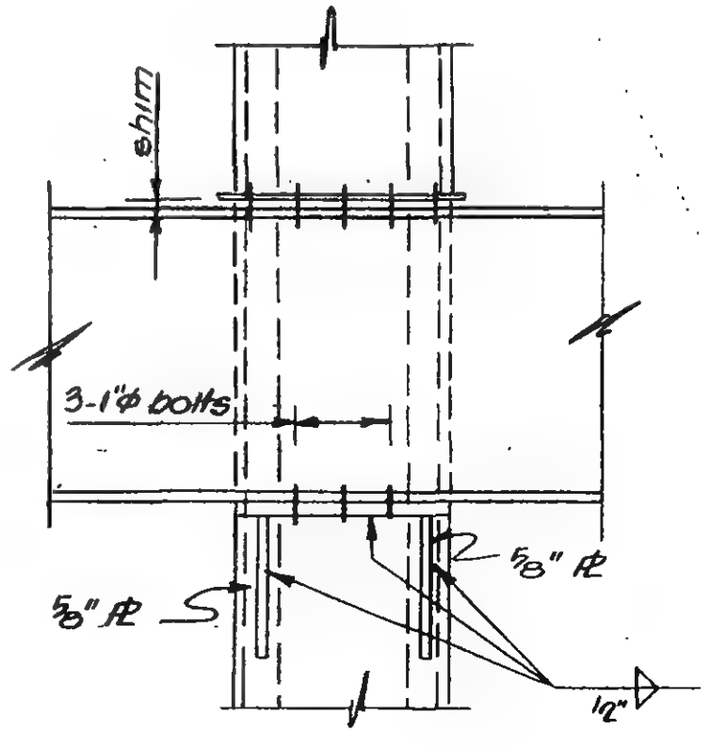

Section b-b

6-AB1-100

WORTHINGTON, SKILLING, HELLE & JACKSON — Civil & Structural Engineers

PROJECT: THE WORLD TRADE CENTER | TITLE: CONNECTION DETAIL 294 A | DATE: 6-12-67

REVISIONS

7-28-67

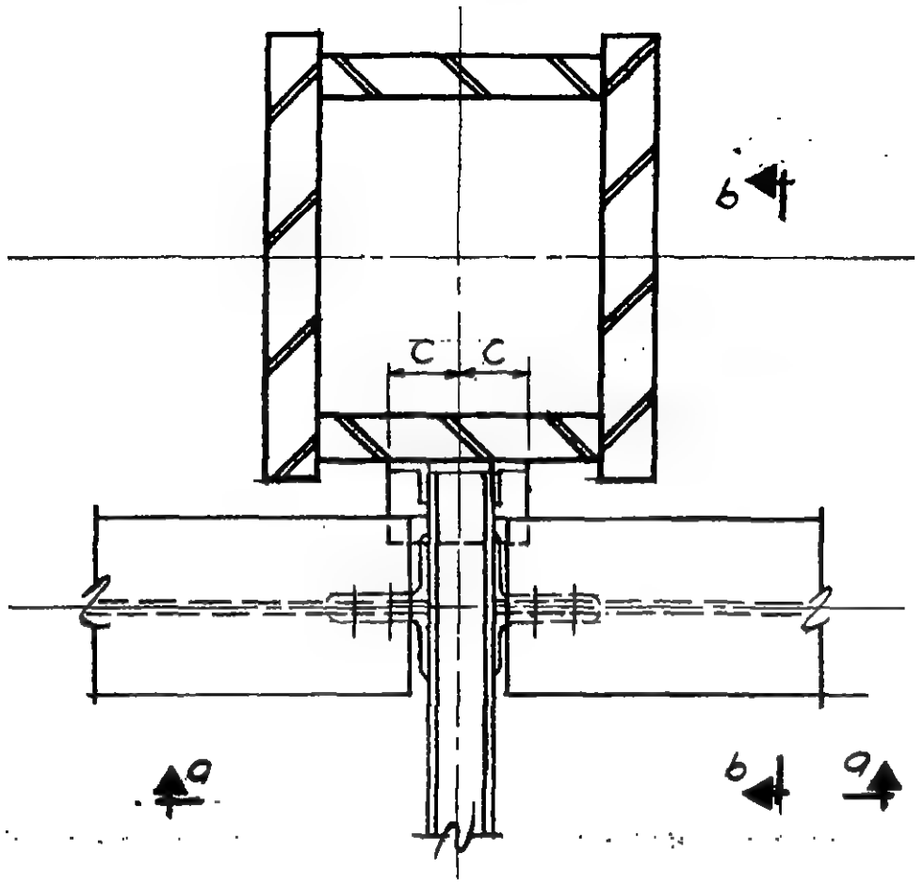

PLAN

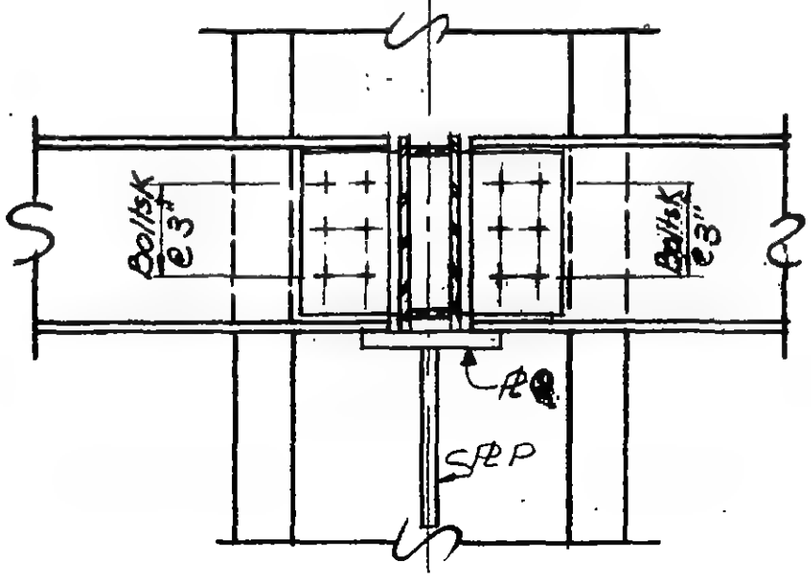

Section a-a

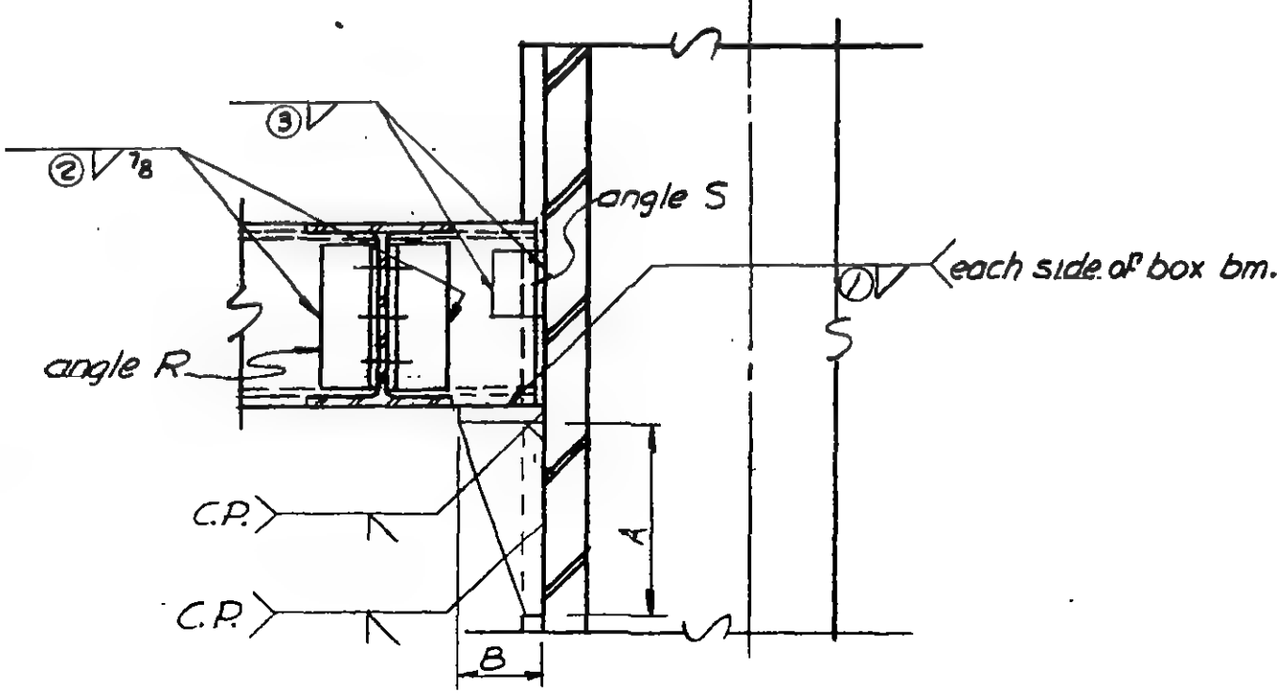

Section b-b

LICENSED PROFESSIONAL ENGINEER
LESLIE E. ROBERTSON
No. 34360
UNIVERSITY OF THE STATE OF NEW YORK

6-AB1-101

WORTHINGTON, SKILLING, HELLE & JACKSON Civil & Structural Engineers

PROJECT THE WORLD TRADE CENTER | TITLE SCHEDULE FOR DETAIL 294 A | DATE 7-28-67

REVISIONS

	294 A	294 D
PLATES		
P	1"	1"
Q	1"	1/2"
ANGLES		
R	2-6"x4"x1"x0'-9 3/4"	
S	2-4"x4"x5/16x0'-6"	
DIMENSIONS		
A	1'-8"	
B	0'-6"	
C	0'-7"	
BOLTS		
K	6-7/8"ϕ	
WELDS		
①	9/16"	
②	7/8"	
③	5/16"	

LICENSED PROFESSIONAL ENGINEER LESLIE E. ROBERTSON No. 34360 STATE OF NEW YORK

G-ABI-101.1

WORTHINGTON, SKILLING, HELLE & JACKSON — Civil & Structural Engineers

PROJECT: THE WORLD TRADE CENTER | TITLE: CONNECTION DETAIL 294 B, C | DATE: 8-14-67

REVISIONS

11-14-67

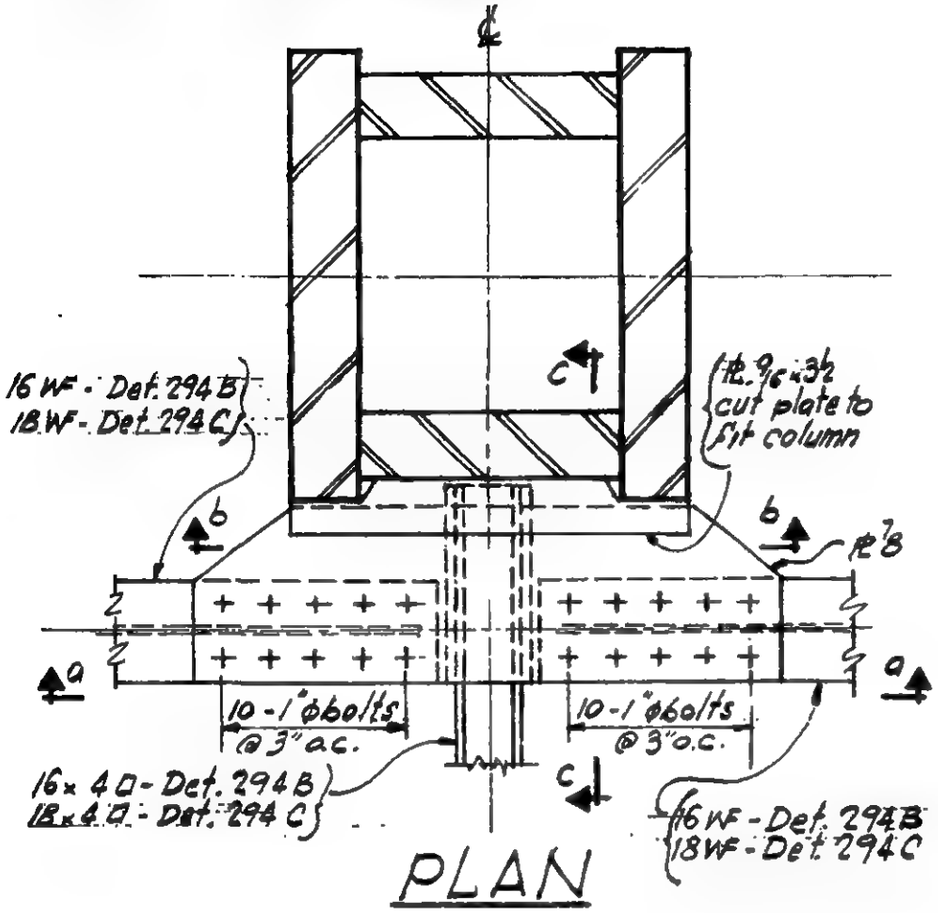

PLAN

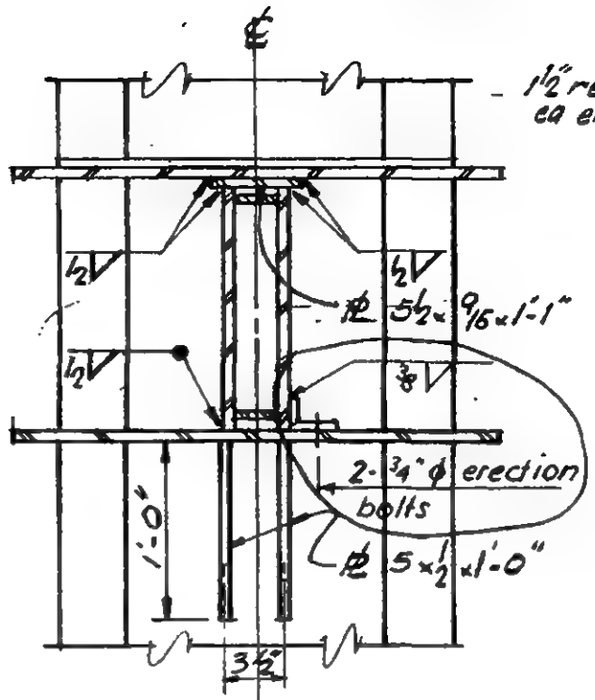

Section b-b

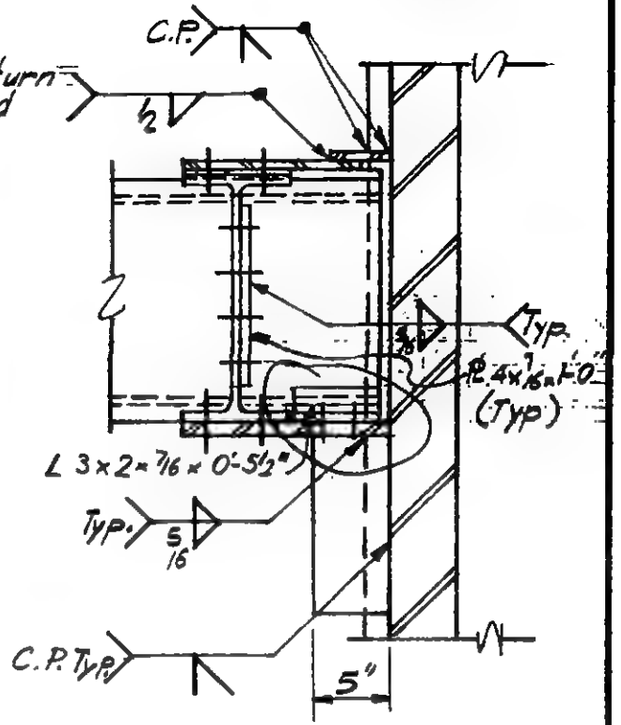

Section c-c

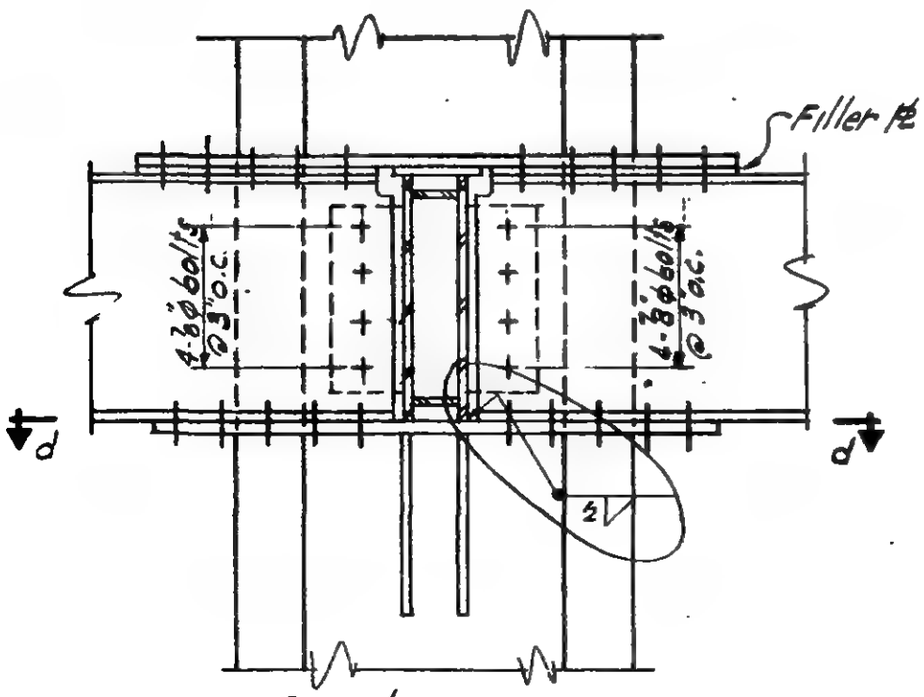

Section a-a

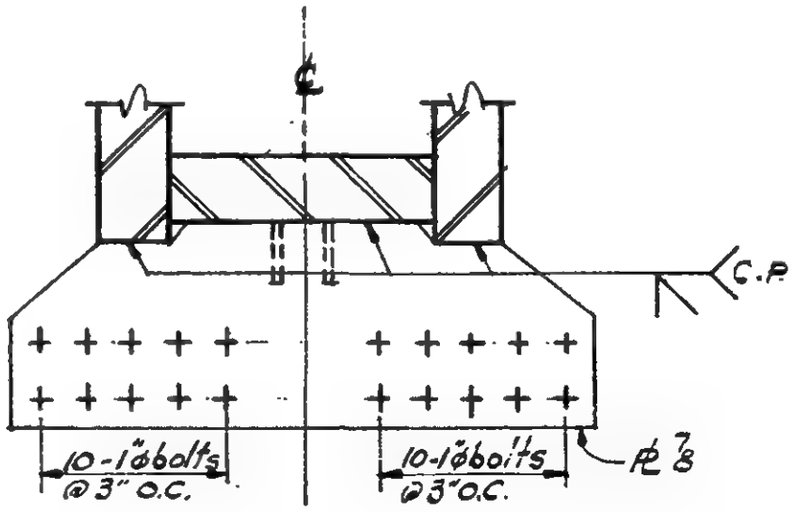

Section d-d

LICENSED PROFESSIONAL ENGINEER
LESLIE E. ROBERTSON
No. 34360
UNIVERSITY OF THE STATE OF NEW YORK

6-AB1-101.2

SKILLING - HELLE - CHRISTIANSEN - ROBERTSON — Structural & Civil Engineers

PROJECT THE WORLD TRADE CENTER | TITLE CONNECTION DETAIL 294 D | DATE 9-15-67

REVISIONS

10-2-67
11-14-67

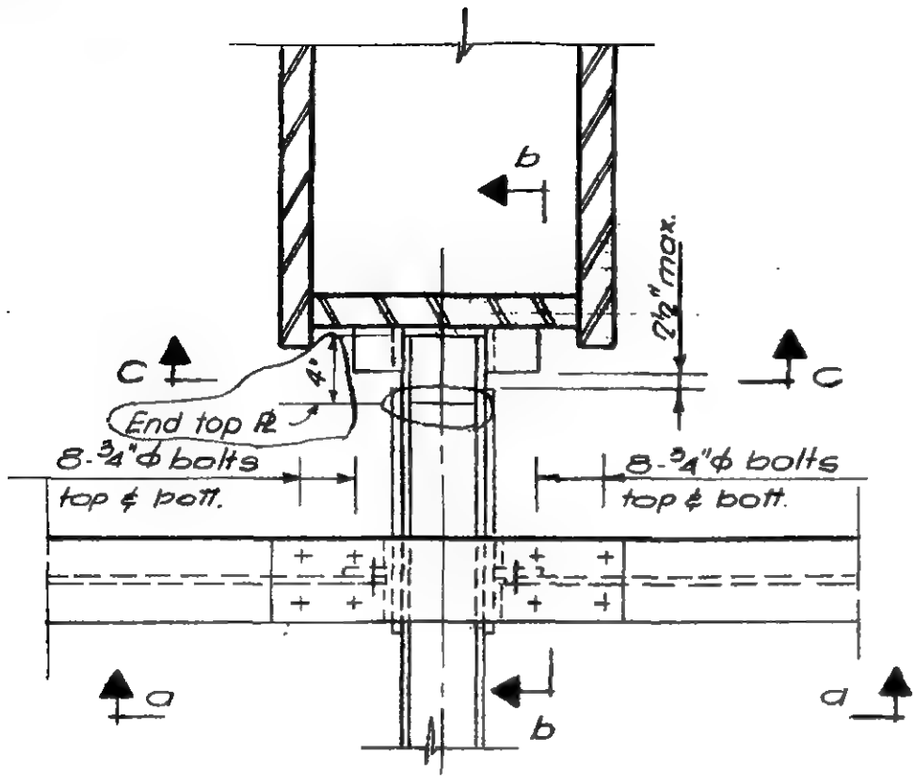

Plan

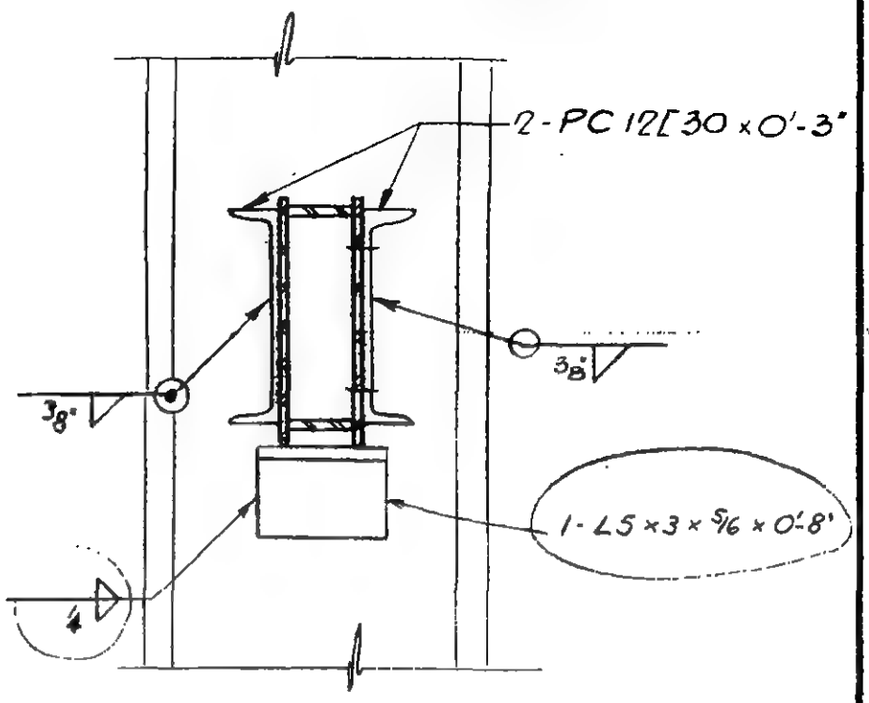

Section c-c

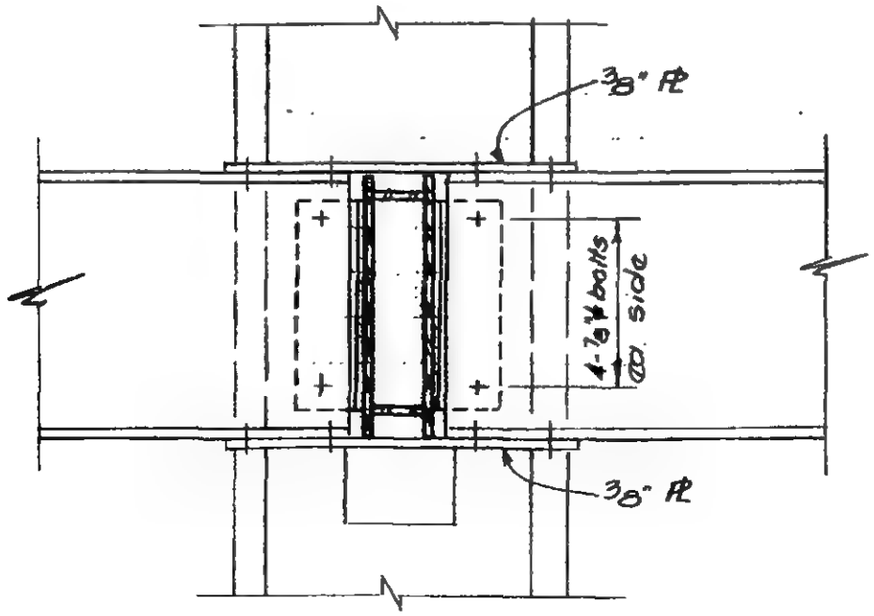

Section a-a

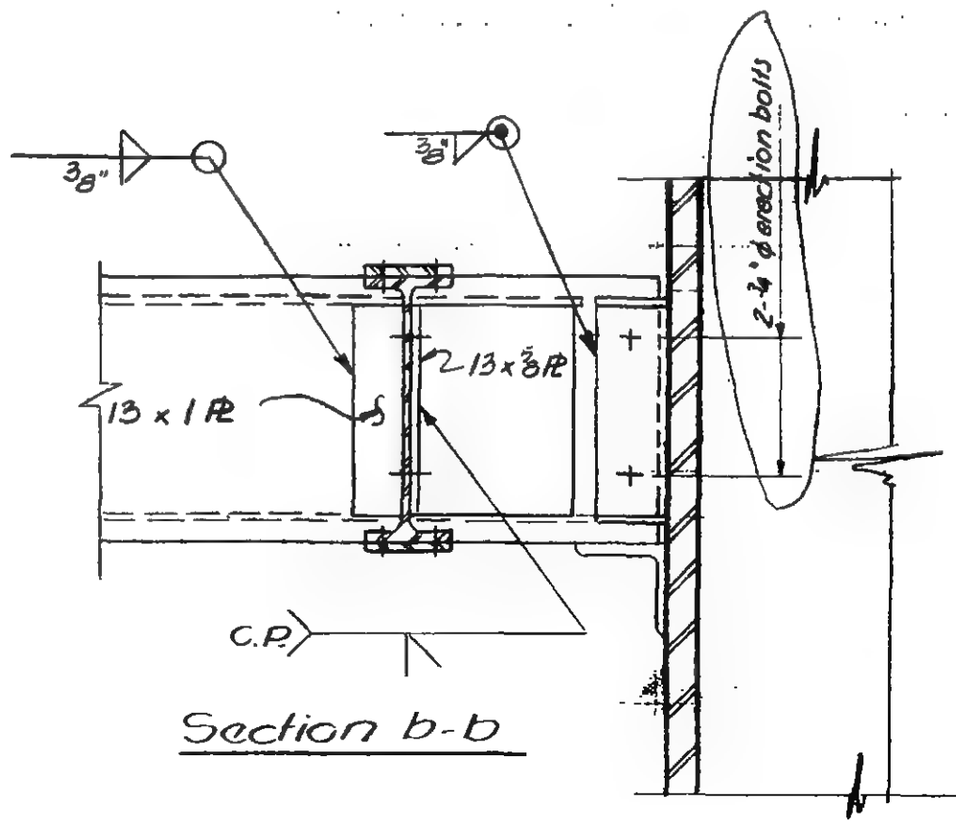

Section b-b

LICENSED PROFESSIONAL ENGINEER
LESLIE E. ROBERTSON
No. 34360
UNIVERSITY OF THE STATE OF NEW YORK

G-AB1-101.3

WORTHINGTON, SKILLING, HELLE & JACKSON — Civil & Structural Engineers

PROJECT	TITLE	DATE
THE WORLD TRADE CENTER	CONNECTION DETAIL 295 A, D	6-5-67

REVISIONS

10-2-67

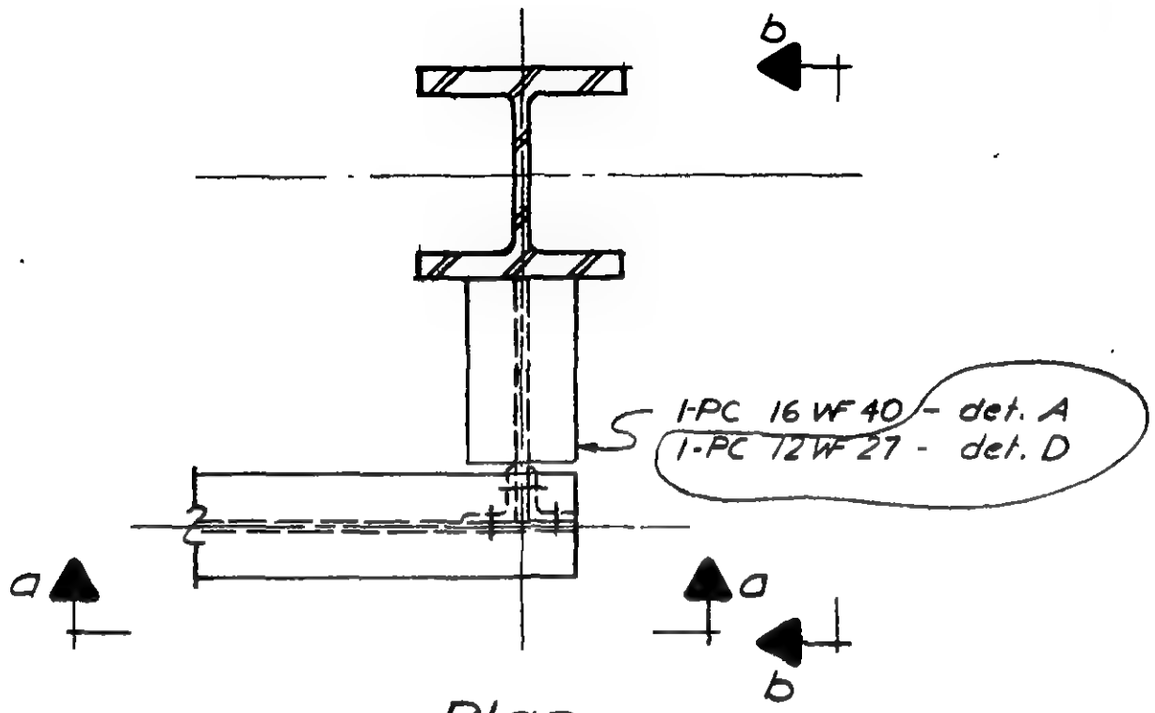

Plan

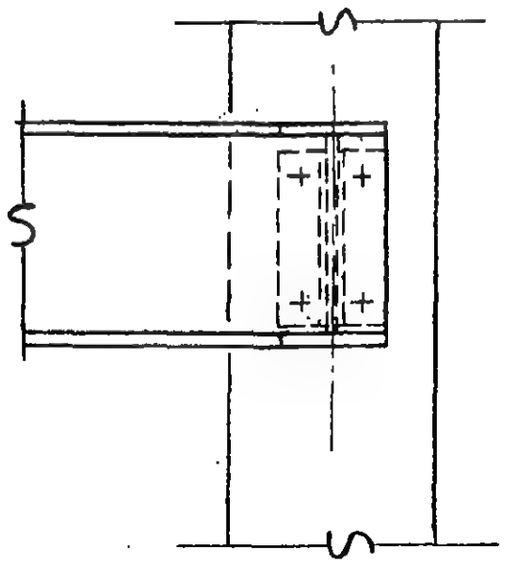

Section a-a

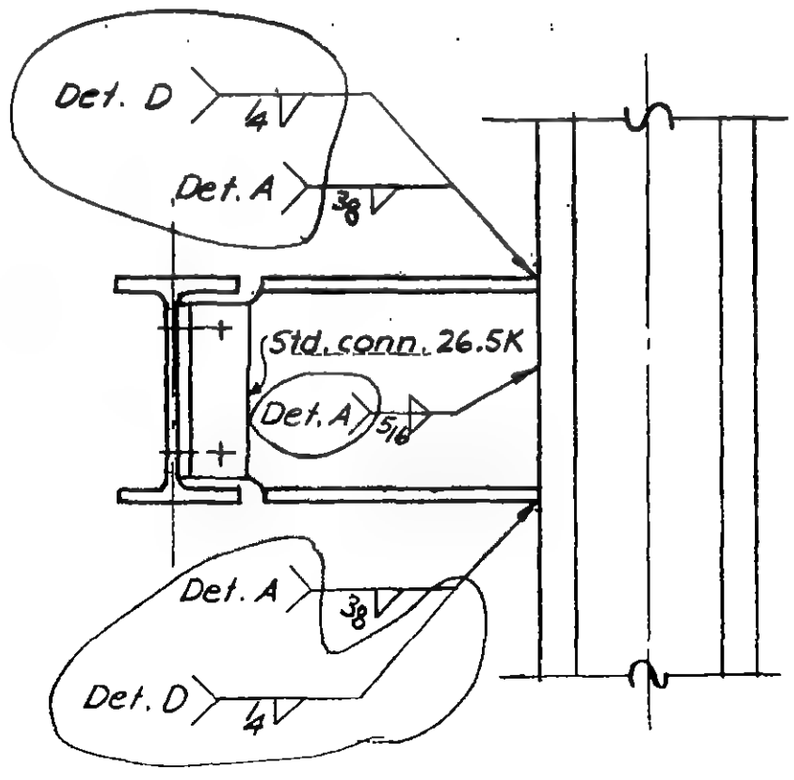

Section b-b

LICENSED PROFESSIONAL ENGINEER
LESLIE E. ROBERTSON
No. 34360
UNIVERSITY OF THE STATE OF NEW YORK

6-AB1-102

SKILLING - HELLE - CHRISTIANSEN - ROBERTSON Structural & Civil Engineers

PROJECT THE WORLD TRADE CENTER | TITLE CONNECTION DETAIL 295 E,G | DATE 12-21-67

REVISIONS

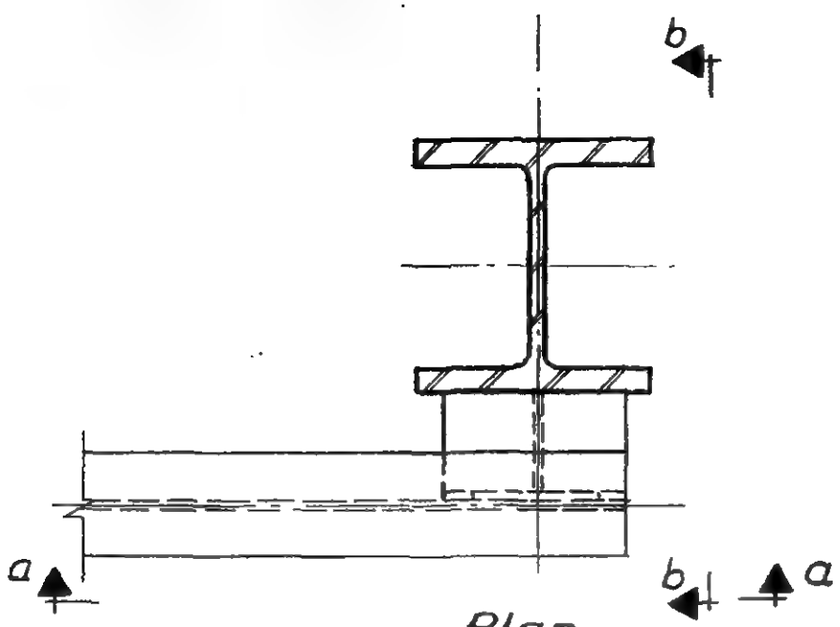

Plan

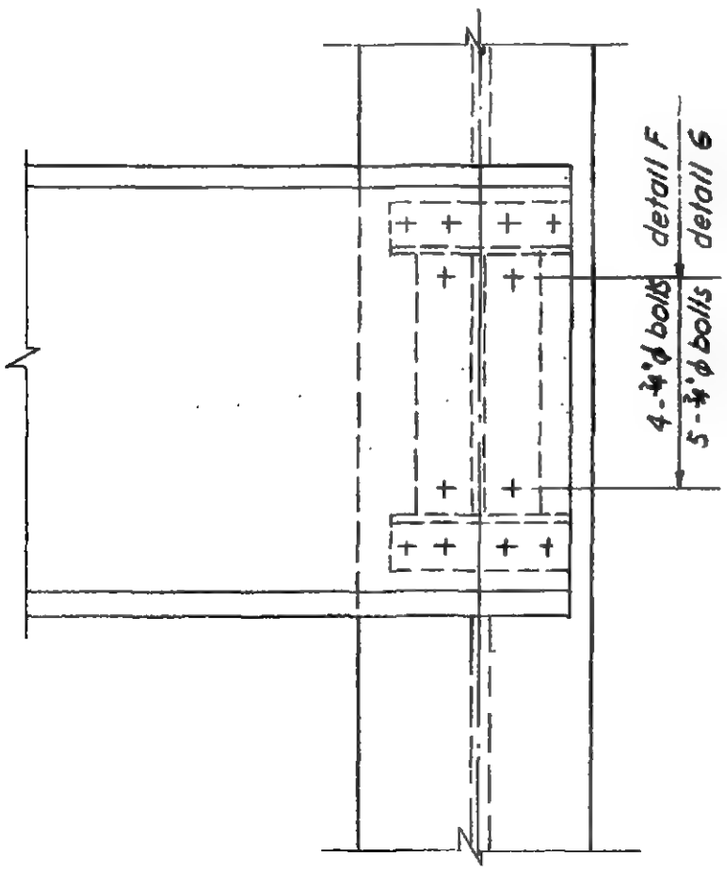

Section a-a

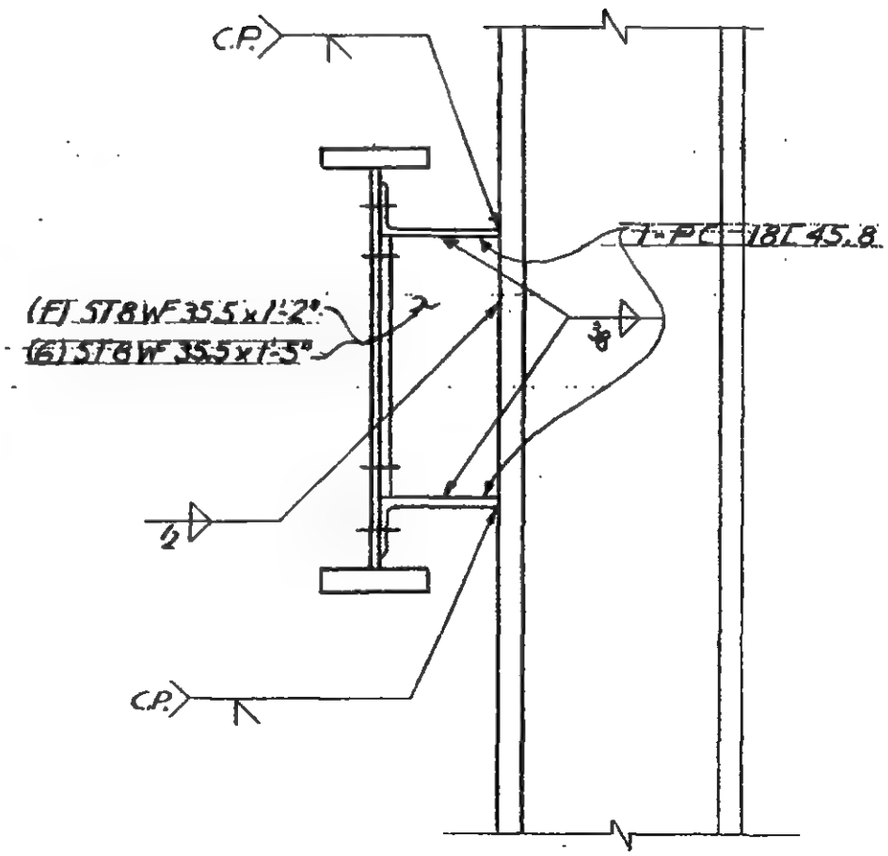

Section b-b

LICENSED PROFESSIONAL ENGINEER
LESLIE E. ROBERTSON
No. 34360
UNIVERSITY OF THE STATE OF NEW YORK

6-ABI-102.1

WORTHINGTON, SKILLING, HELLE & JACKSON — Civil & Structural Engineers

PROJECT: THE WORLD TRADE CENTER | TITLE: CONNECTION DETAIL 296 A,B,C,H | DATE: 5-9-67

REVISIONS
7-28-67
9-15-67
11-14-67
12-21-67

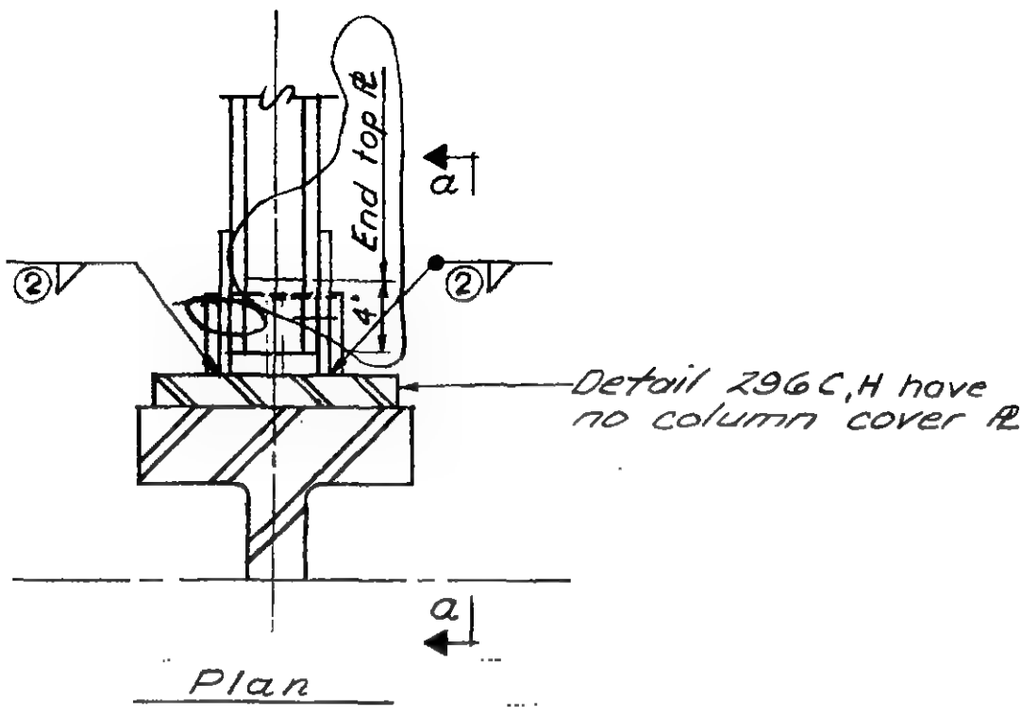

Plan

Schedule			
	Plate P	Welds ①	Welds ②
296 A	6 × 5/16 × 1'-2"	1/4	5/16
296 B	6 × 5/16 × 1'-2"	1/4	5/16
296 C	6 × 5/16 × 1'-2"	1/4	5/16
296 H	6 × 5/8 × 1'-2"	1/2	9/16

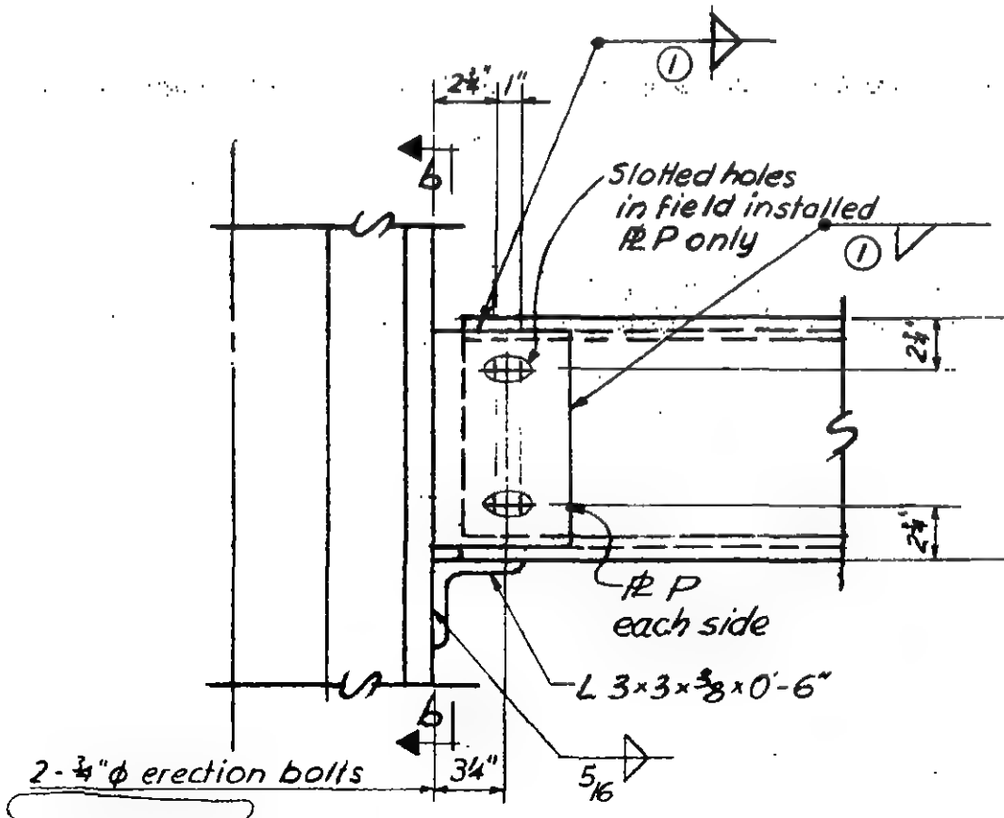

Section a-a

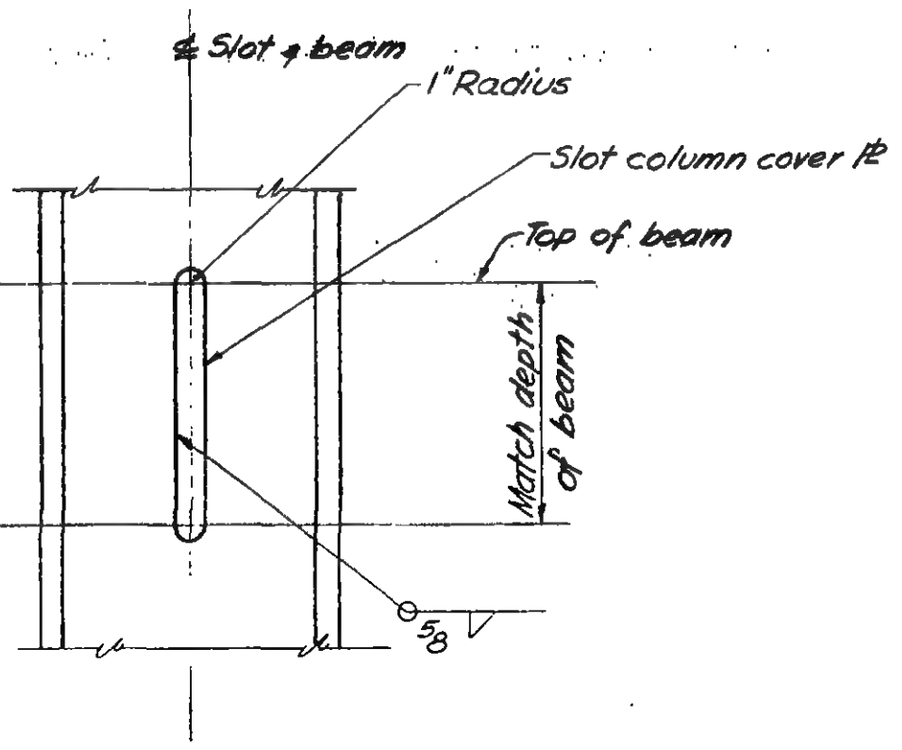

Section b-b
Detail 296 B only

6-ABI-103

SKILLING – HELLE – CHRISTIANSEN – ROBERTSON Structural & Civil Engineers

PROJECT	TITLE	DATE
THE WORLD TRADE CENTER	CONNECTION DETAIL 296 D	10-5-67

REVISIONS

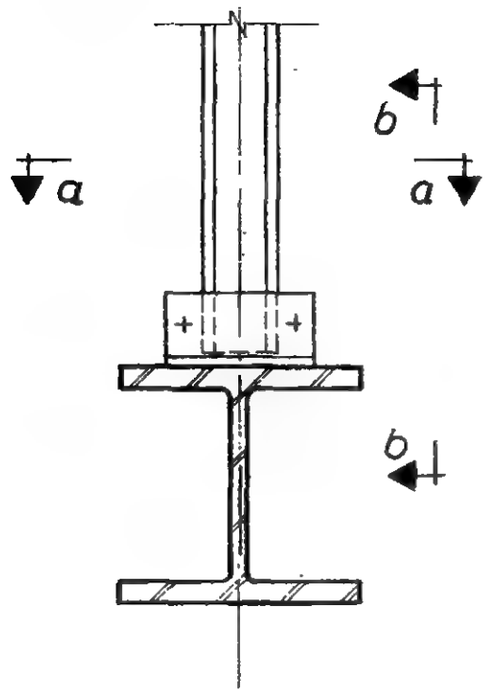

Plan

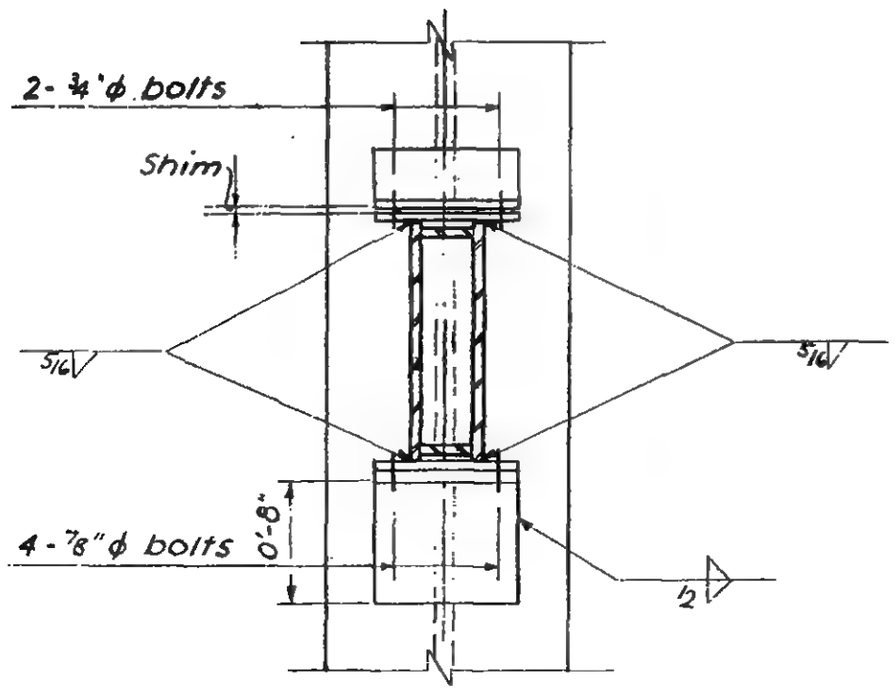

Section a-a

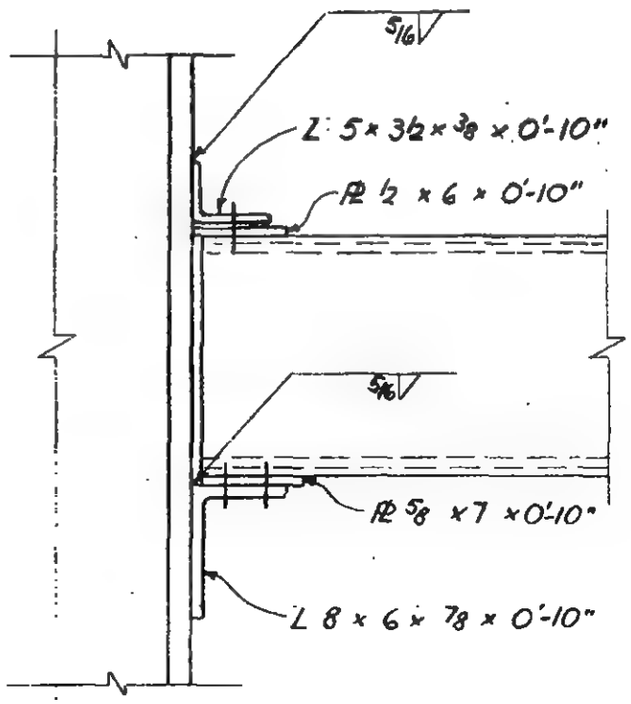

Section b-b

LICENSED PROFESSIONAL ENGINEER
LESLIE E. ROBERTSON
No. 34360
UNIVERSITY OF THE STATE OF NEW YORK

6-AB1-103.1

SKILLING - HELLE - CHRISTIANSEN - ROBERTSON Structural & Civil Engineers

PROJECT THE WORLD TRADE CENTER | TITLE CONNECTION DETAIL 296 I | DATE 12-21-67

REVISIONS

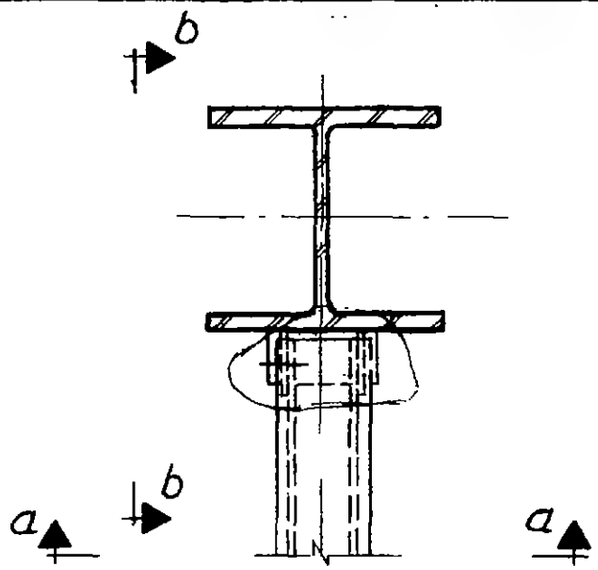

Plan

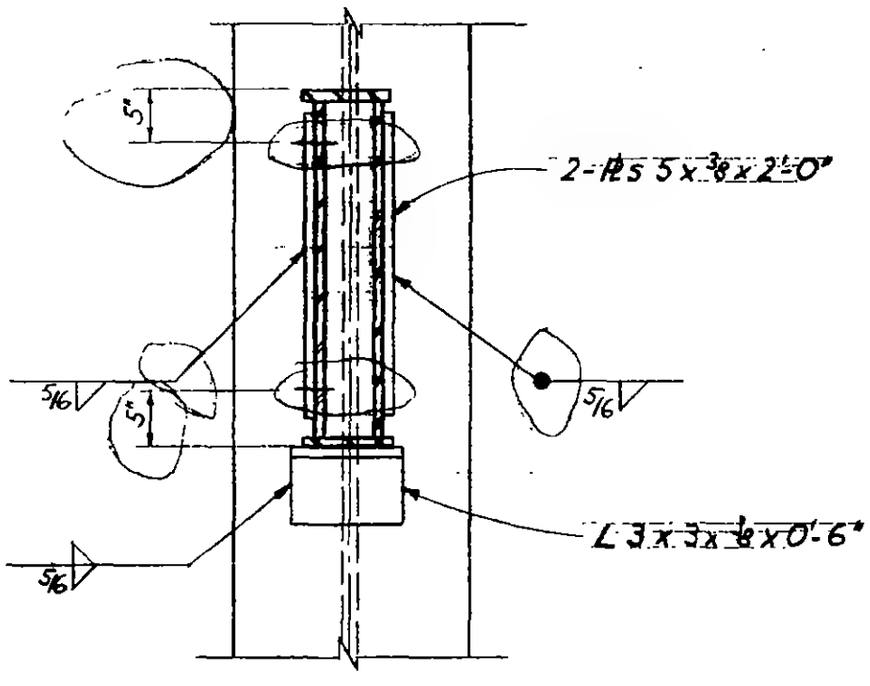

Section a-a

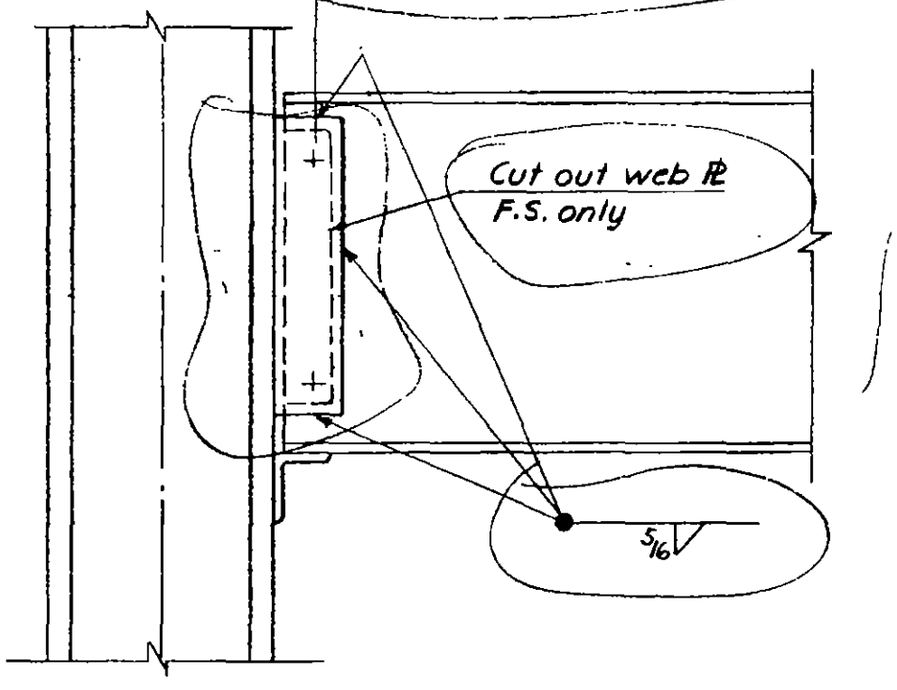

Section b-b

LICENSED PROFESSIONAL ENGINEER
LESLIE E. ROBERTSON
NO. 32050
STATE OF NEW YORK

6-ABI-103.2

WORTHINGTON, SKILLING, HELLE & JACKSON — Civil & Structural Engineers

PROJECT THE WORLD TRADE CENTER | TITLE CONNECTION DETAIL 297 | DATE 7/20/67

REVISIONS

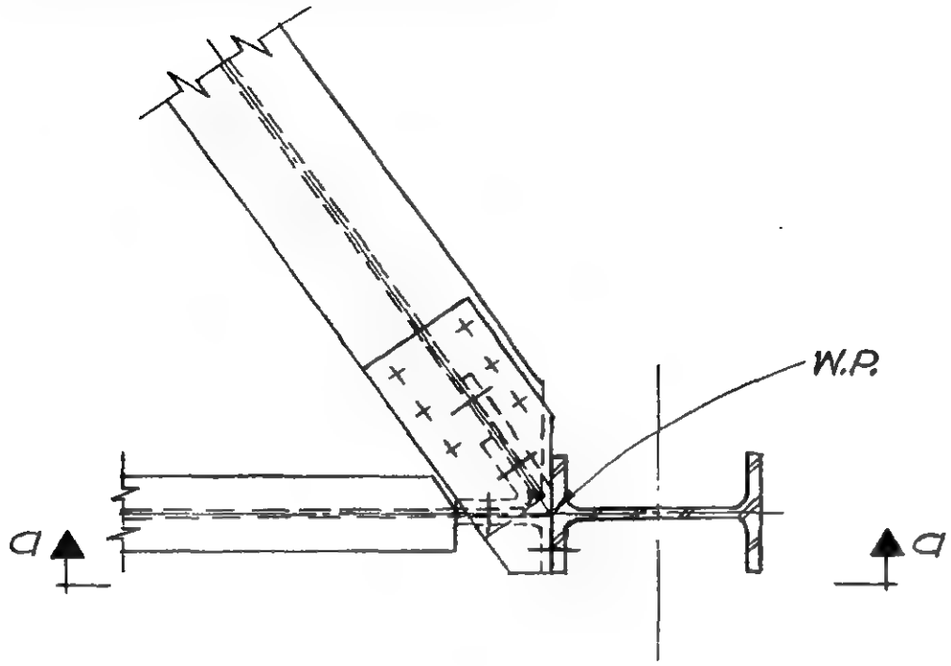

PLAN

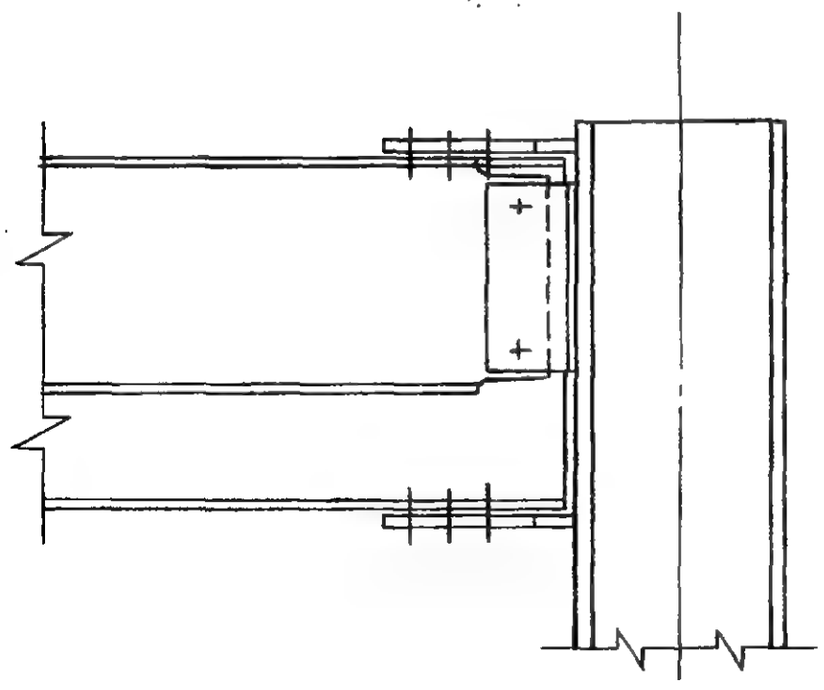

Section a-a

LICENSED PROFESSIONAL ENGINEER
LESLIE E. ROBERTSON
No. 34360
UNIVERSITY OF THE STATE OF NEW YORK

6-AB1-104

WORTHINGTON, SKILLING, HELLE & JACKSON — Civil & Structural Engineers

PROJECT	TITLE	DATE
THE WORLD TRADE CENTER	CONNECTION DETAIL 299	7/20/67

REVISIONS

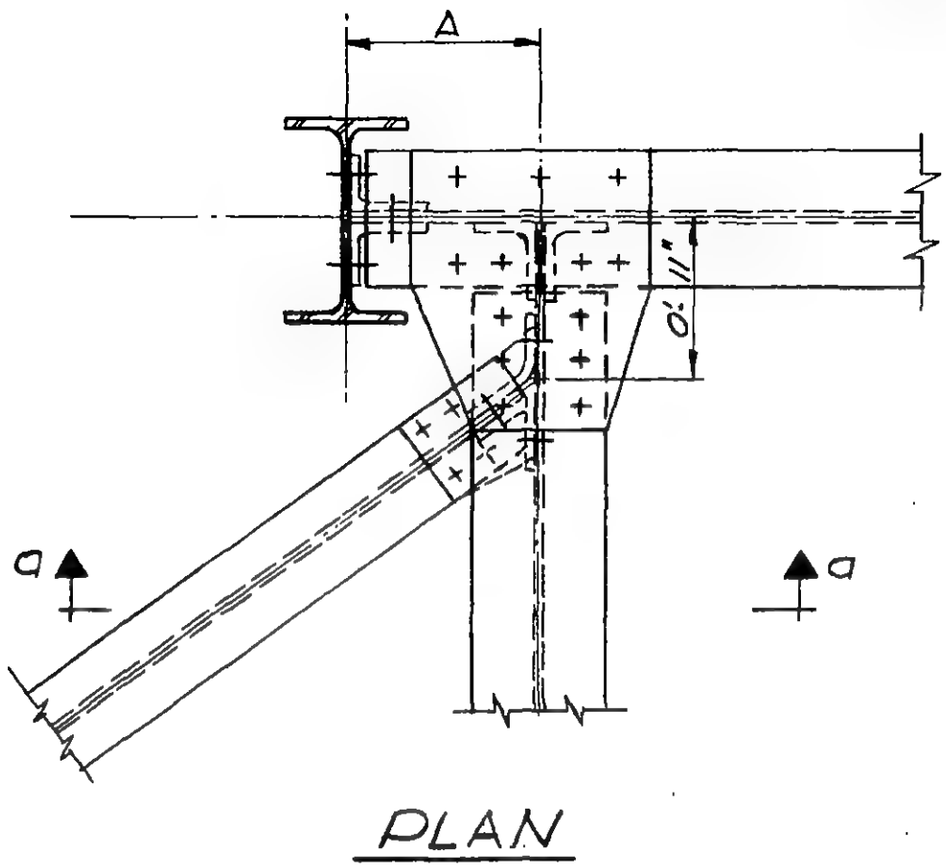

PLAN

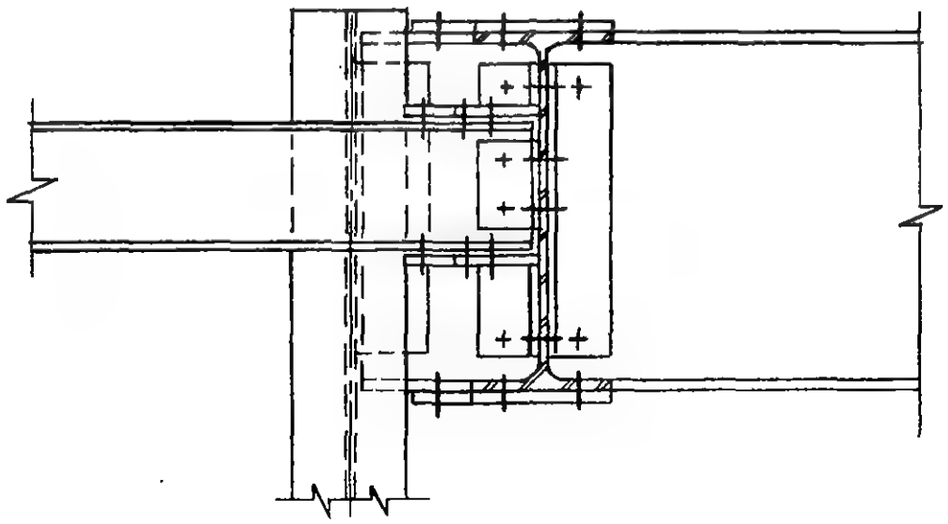

Section a-a

LICENSED PROFESSIONAL ENGINEER
LESLIE E. ROBERTSON
No. 34360
UNIVERSITY OF THE STATE OF NEW YORK

6-AB1-106

WORTHINGTON, SKILLING, HELLE & JACKSON Civil & Structural Engineers

PROJECT THE WORLD TRADE CENTER | TITLE CONNECTION DETAIL 300 | DATE 7/20/67

REVISIONS

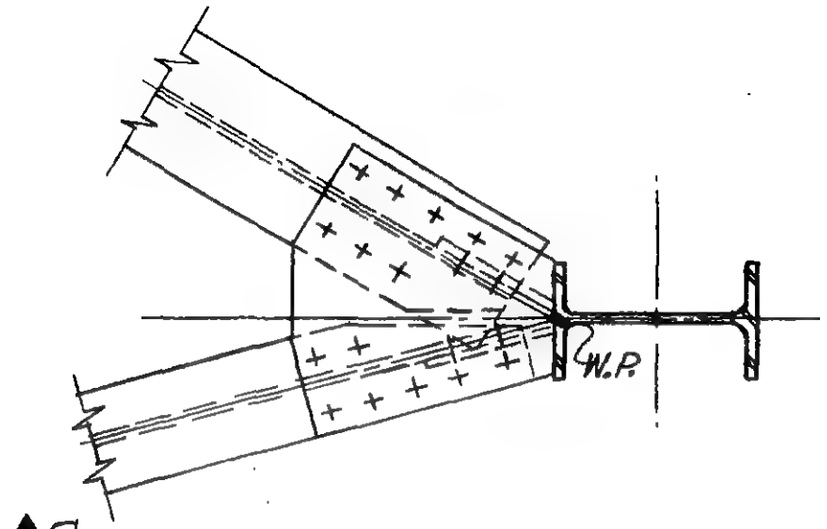

PLAN

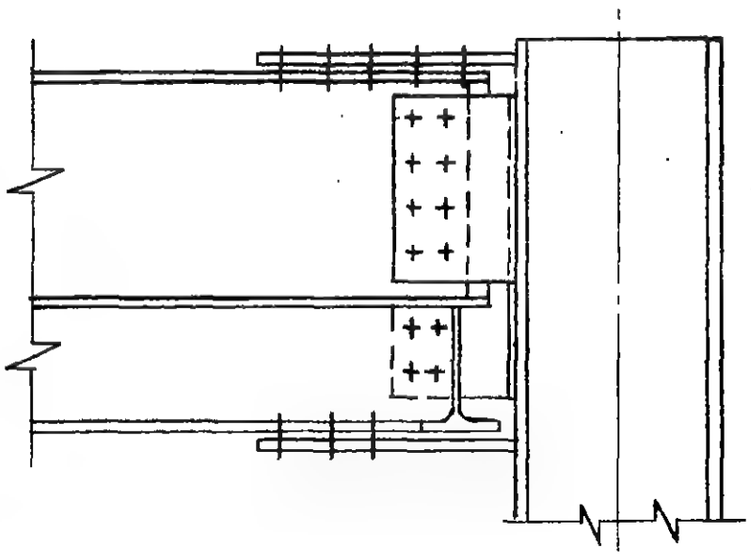

Section a-a

LICENSED PROFESSIONAL ENGINEER
LESLIE E. ROBERTSON

G-AB1-107

SKILLING – HELLE – CHRISTIANSEN – ROBERTSON Structural & Civil Engineers

PROJECT THE WORLD TRADE CENTER | TITLE CONNECTION DETAIL 301 A,B,C | DATE 6-5-67

REVISIONS

8-14-67

9-15-67

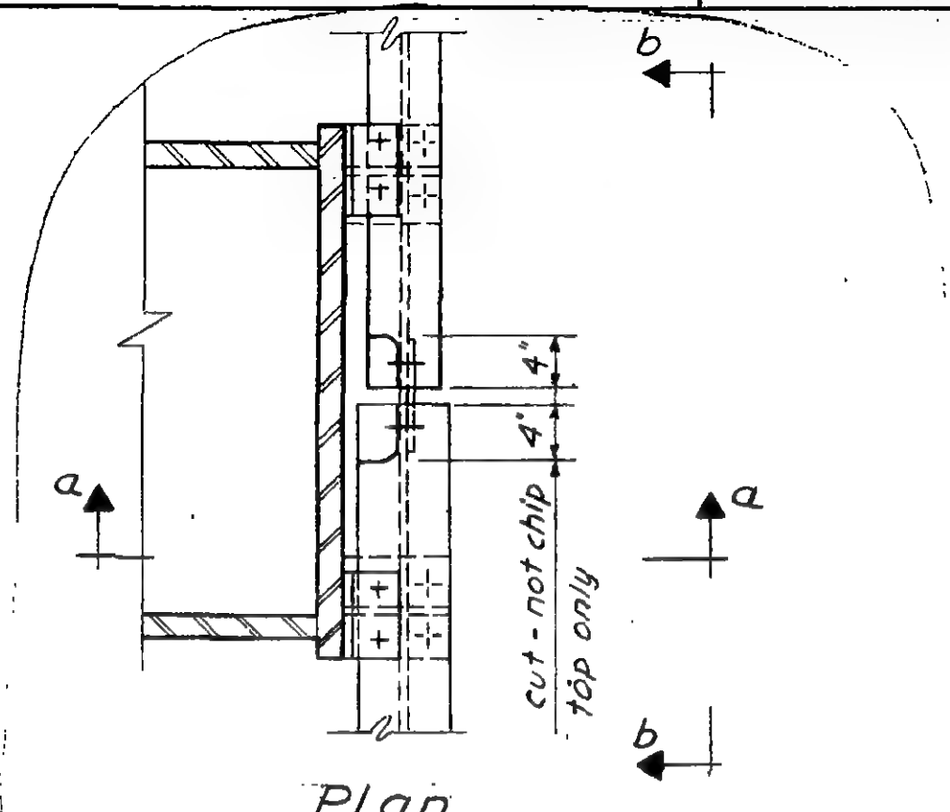

Plan

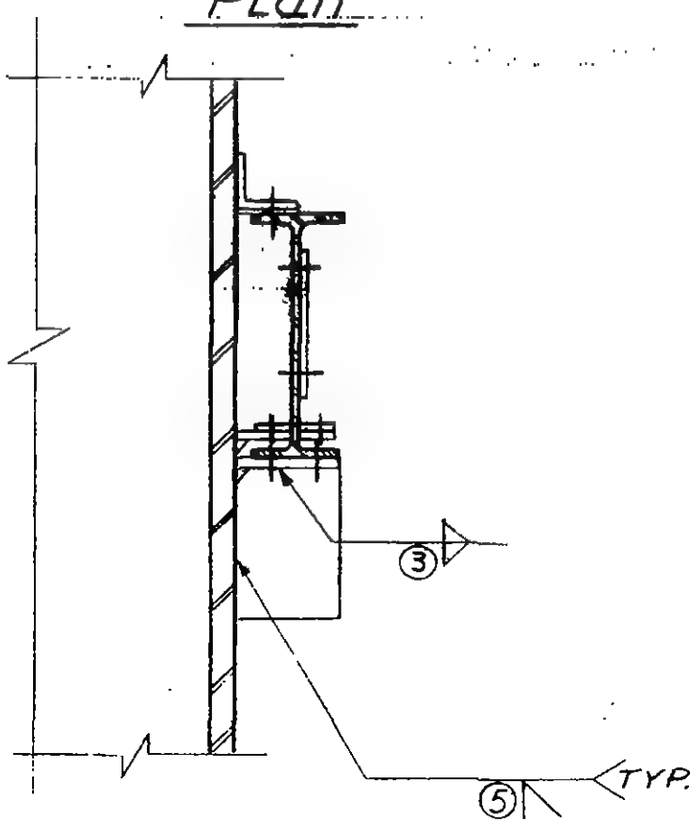

Section a-a

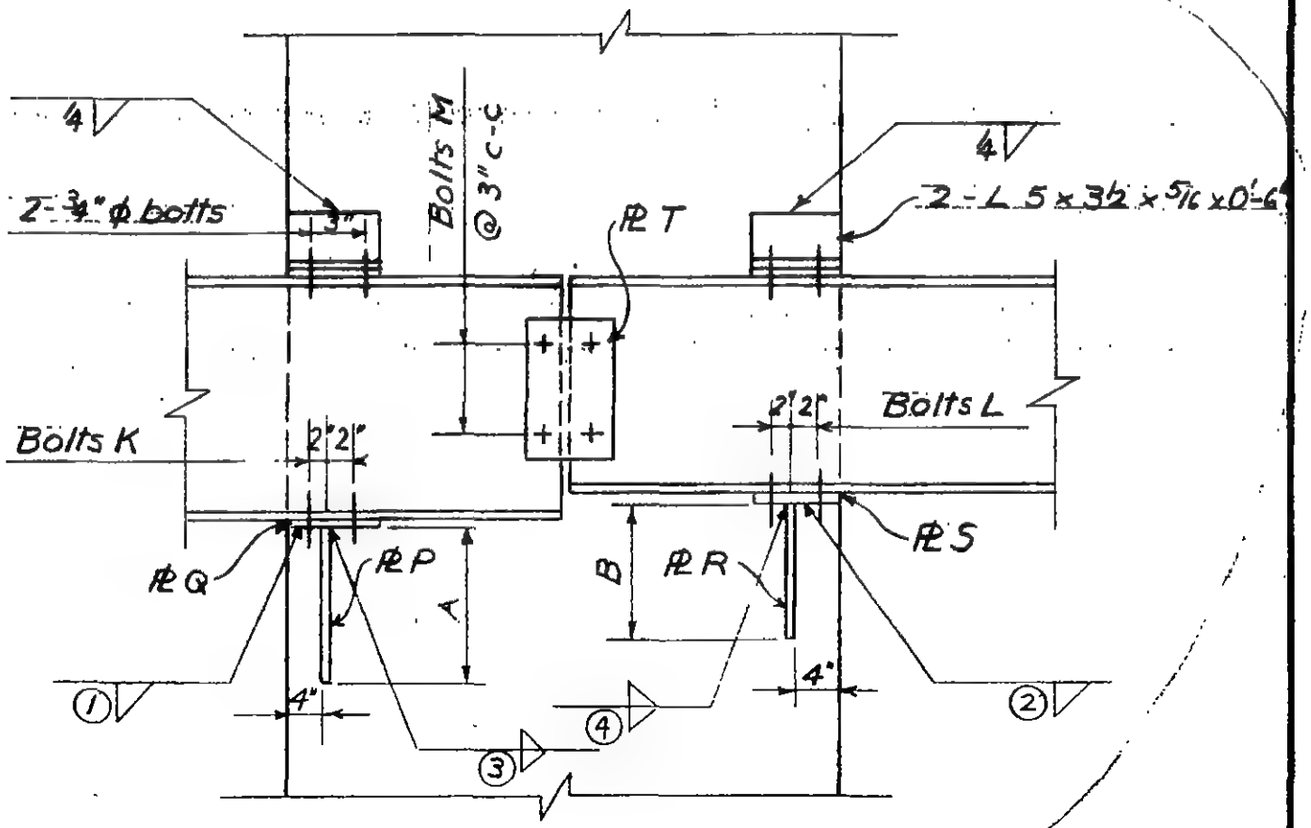

Section b-b

LICENSED PROFESSIONAL ENGINEER
LESLIE E. ROBERTSON
No. 34360
UNIVERSITY OF THE STATE OF NEW YORK

6-AB1-108

SKILLING - HELLE - CHRISTIANSEN - ROBERTSON Structural & Civil Engineers

PROJECT THE WORLD TRADE CENTER | TITLE SCHEDULE FOR DETAIL 301 A, B, C | DATE 8-14-67

REVISIONS

1 9-15-67

	301 A	301 B, C
PLATES		
P	½"	½"
Q	½"	½"
R	½"	½"
S	½"	½"
T	⅜"	⅜"
DIMENSIONS		
A	1'-0"	1'-0"
B	1'-0"	1'-0"
BOLTS		
K	4 - ¾" ϕ	4 - ¾" ϕ
L	4 - ¾" ϕ	4 - ¾" ϕ
M	3 - ¾" ϕ	3'-1" ϕ
WELDS		
①	½	½
②	½	½
③	5/16	5/16
④	5/16	5/16
⑤	C.P.	C.P.

LICENSED PROFESSIONAL ENGINEER
LESLIE E. ROBERTSON
No. 34360
UNIVERSITY OF THE STATE OF NEW YORK

6-AB1-108.1

SKILLING - HELLE - CHRISTIANSEN - ROBERTSON Structural & Civil Engineers

PROJECT THE WORLD TRADE CENTER | TITLE CONNECTION DETAIL 301D | DATE 1-24-~~68~~

REVISIONS

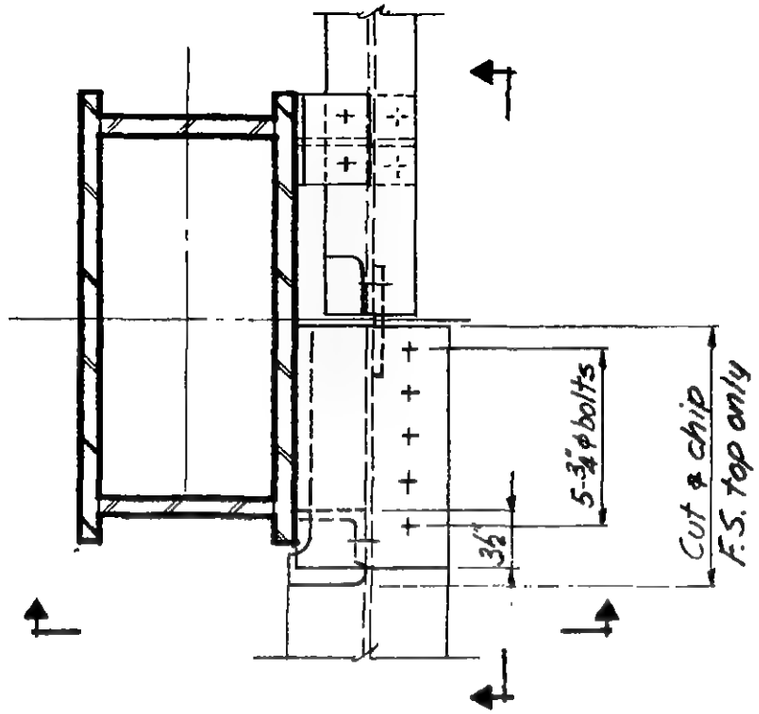

Plan

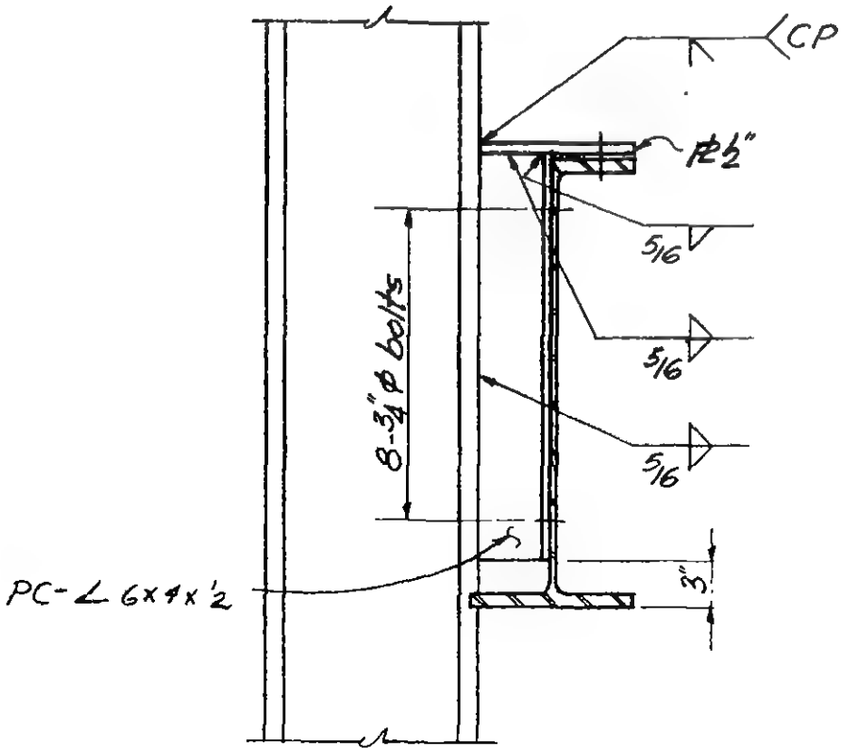

Section a-a

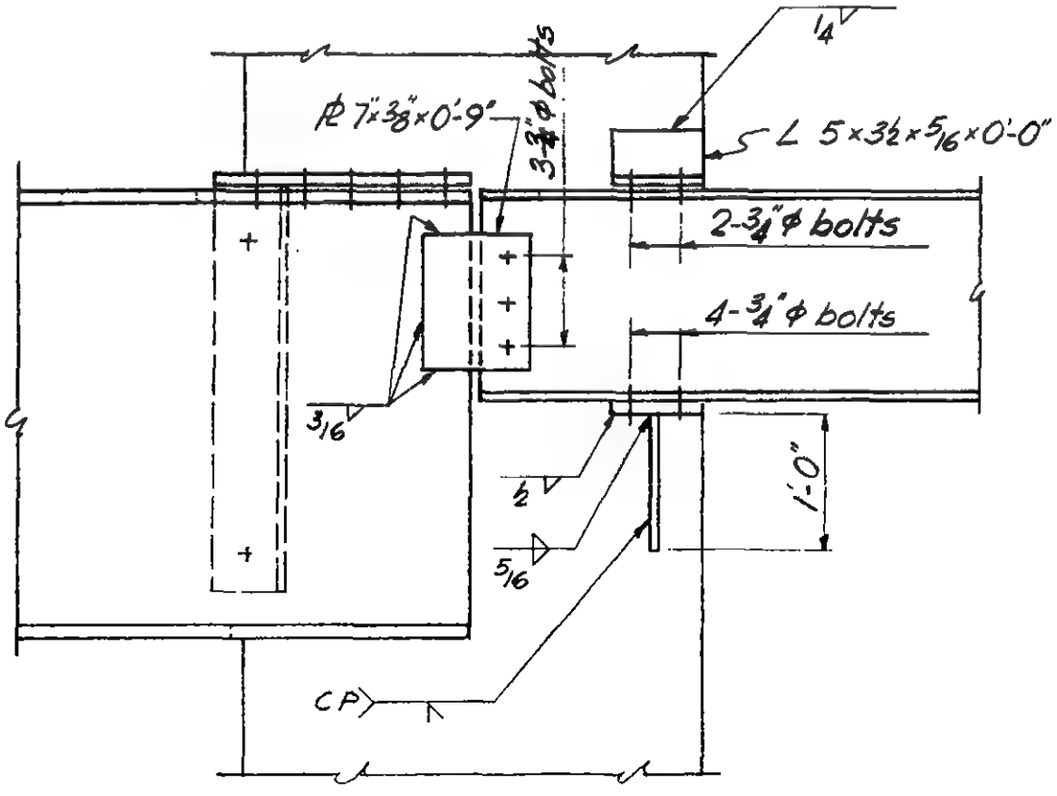

Section b-b

LICENSED PROFESSIONAL ENGINEER
LESLIE E. ROBERTSON
No. 34360
UNIVERSITY OF THE STATE OF NEW YORK

6-AB1-108.2

SKILLING - HELLE - CHRISTIANSEN - ROBERTSON Structural & Civil Engineers

PROJECT THE WORLD TRADE CENTER | TITLE CONNECTION DETAIL 302 A | DATE 6-5-67

REVISIONS

7-20-67
10-5-67

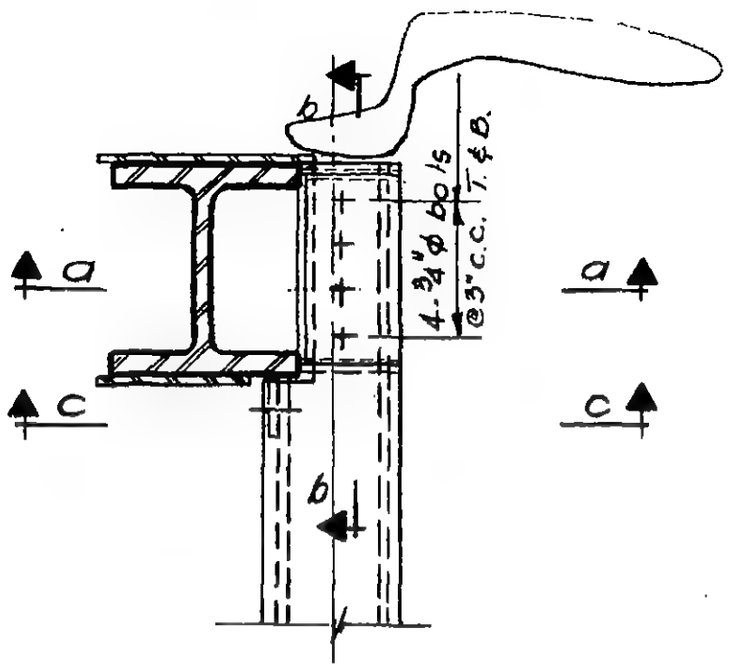

Plan

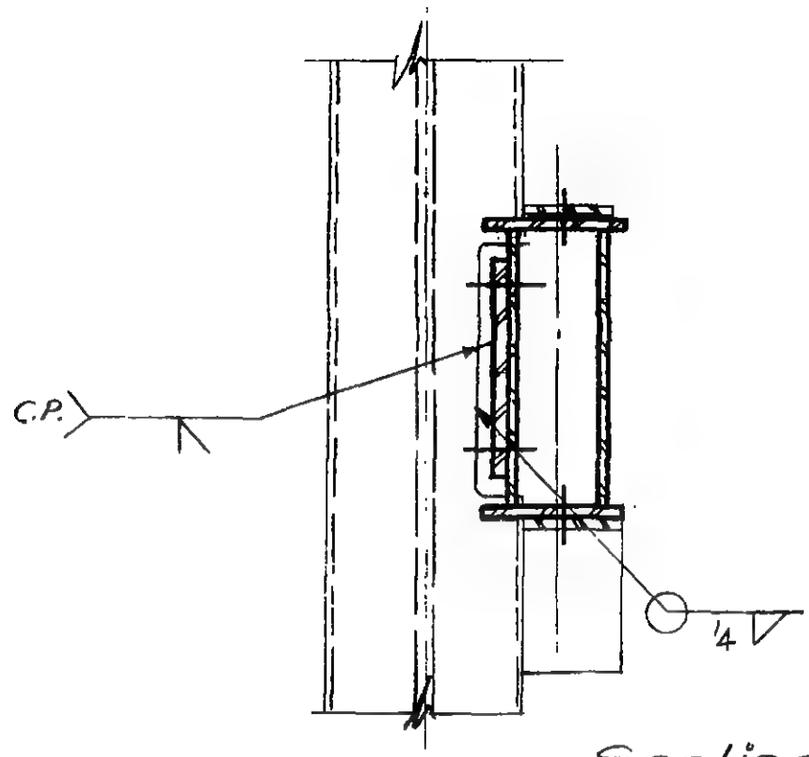

Section c-c

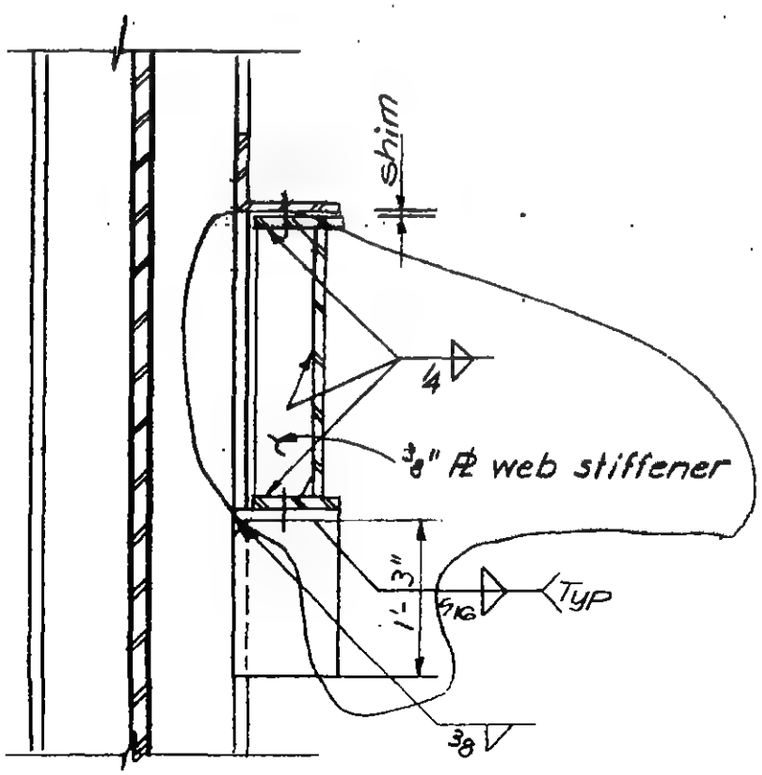

Section a-a.

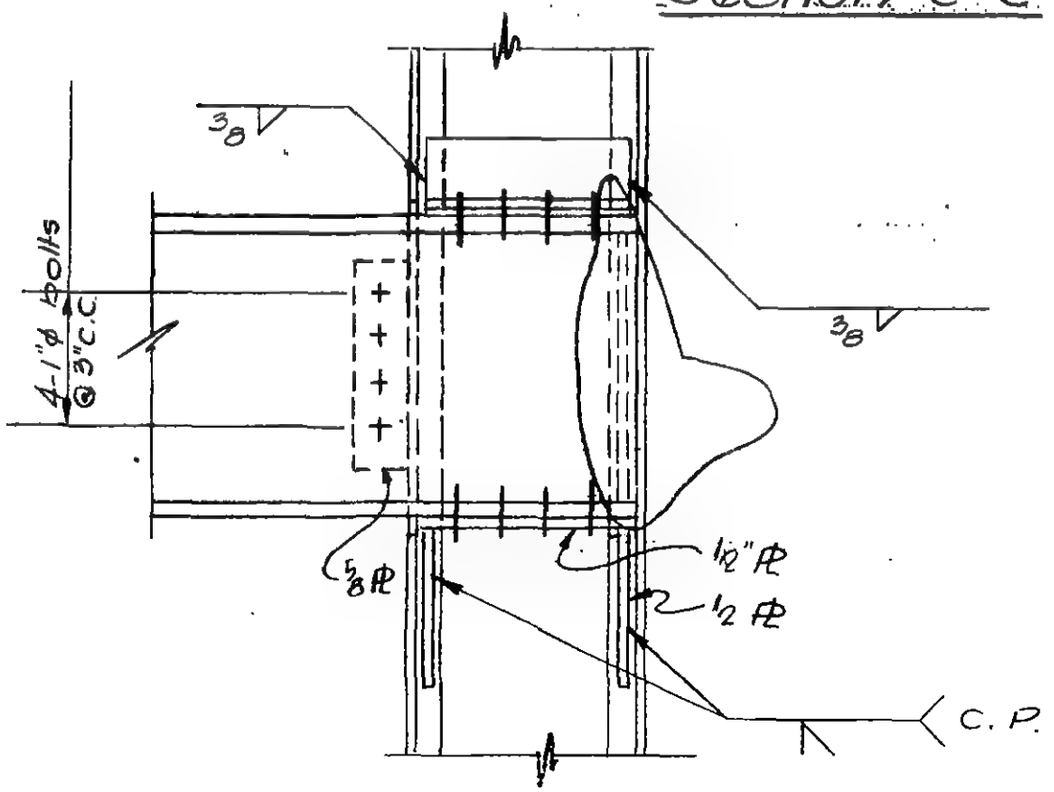

Section b-b

6-ABI-109

WORTHINGTON, SKILLING, HELLE & JACKSON — Civil & Structural Engineers

PROJECT: THE WORLD TRADE CENTER | TITLE: CONNECTION DETAIL 303 A,B | DATE: 6-5-67

REVISIONS

7-28-67
9-15-67
11-10-67

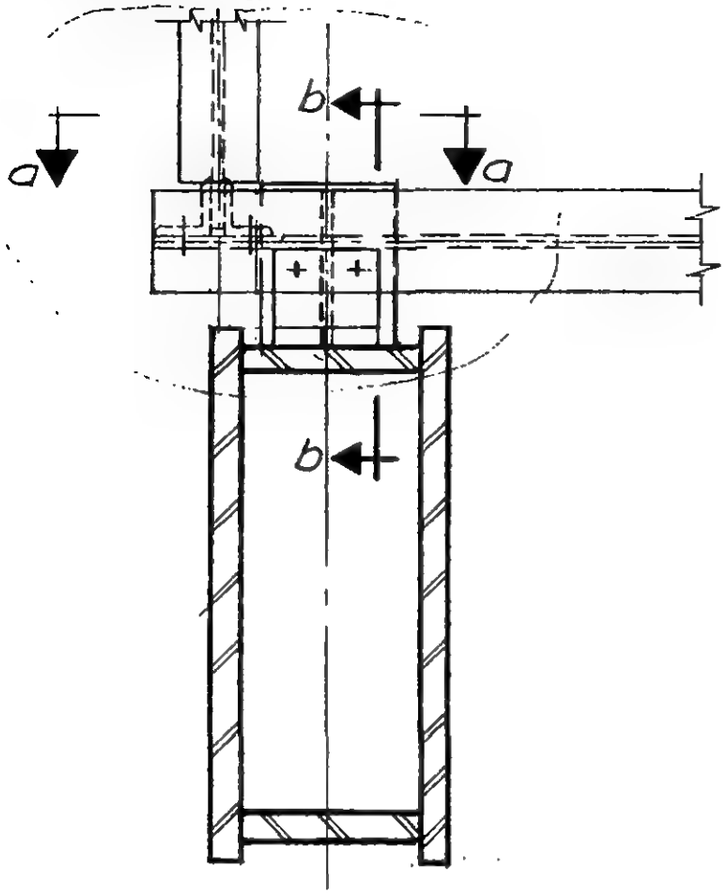

Plan

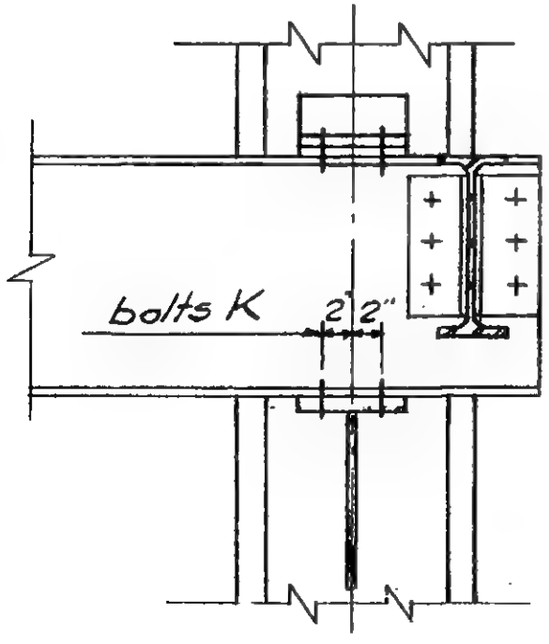

Section a-a

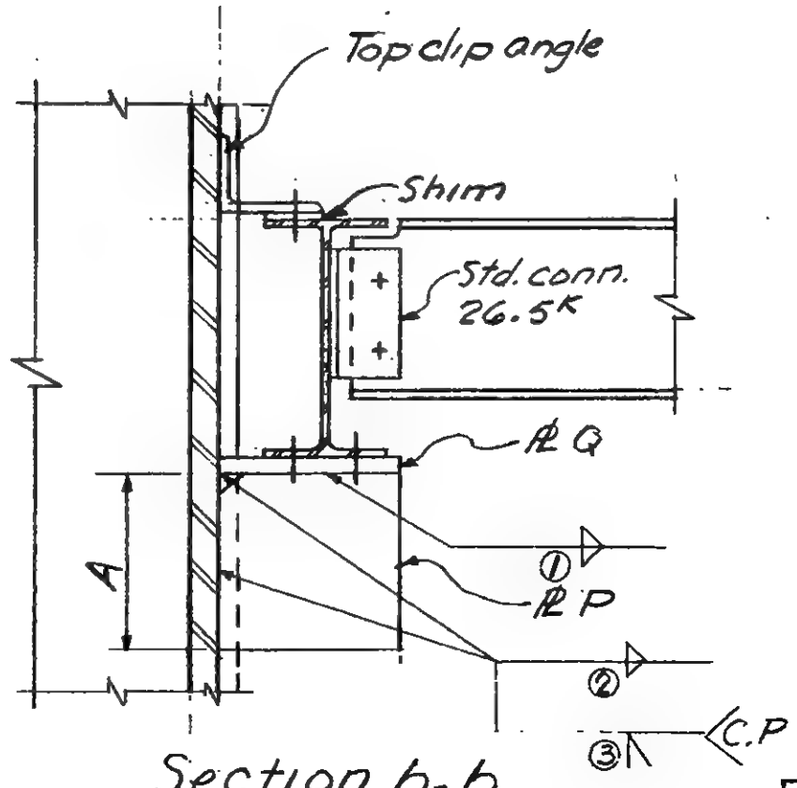

Section b-b

LICENSED PROFESSIONAL ENGINEER
LESLIE E. ROBERTSON
No. 34360
UNIVERSITY OF THE STATE OF NEW YORK

6-AB1-110

WORTHINGTON, SKILLING, HELLE & JACKSON — Civil & Structural Engineers

PROJECT	TITLE	DATE
THE WORLD TRADE CENTER	CONNECTION DETAIL 303 A, B	6-5-67

REVISIONS

-28-67
9-15-67
11-10-67

12-8-67

Use Alt. for beam no. 2186 on Secondary Level above floor 33 Tower A at col. 601

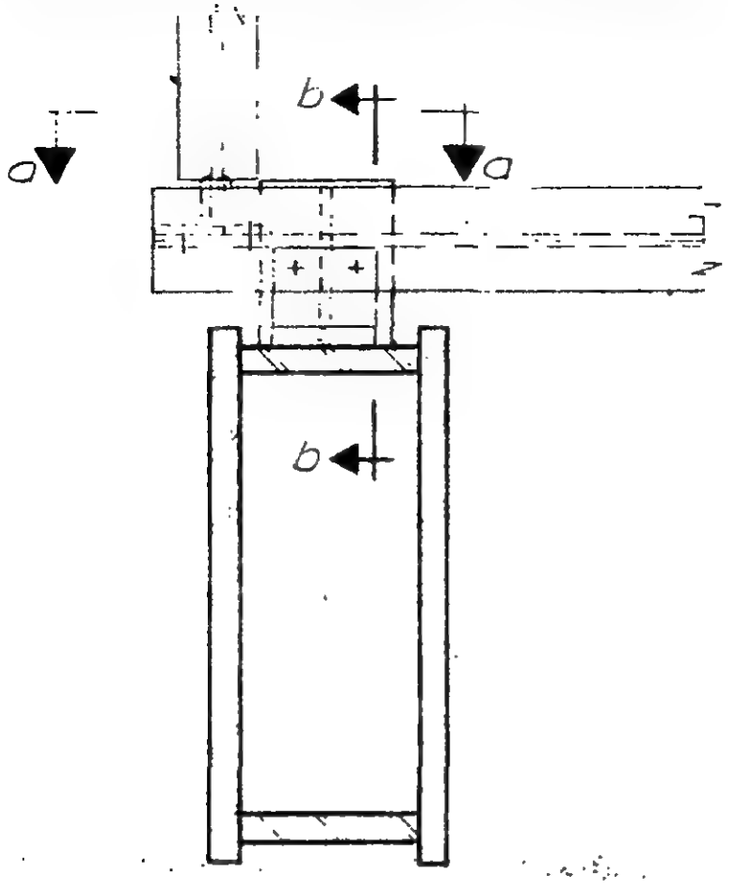

Plan

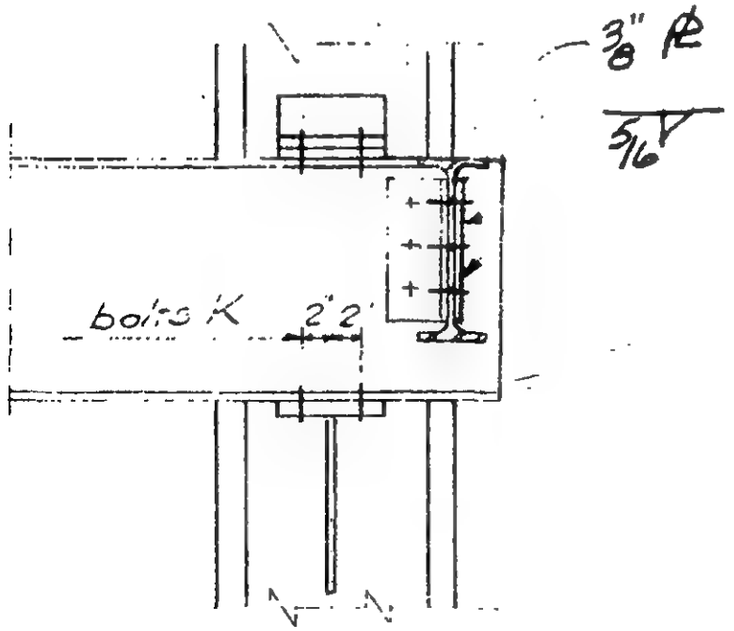

Section a-a

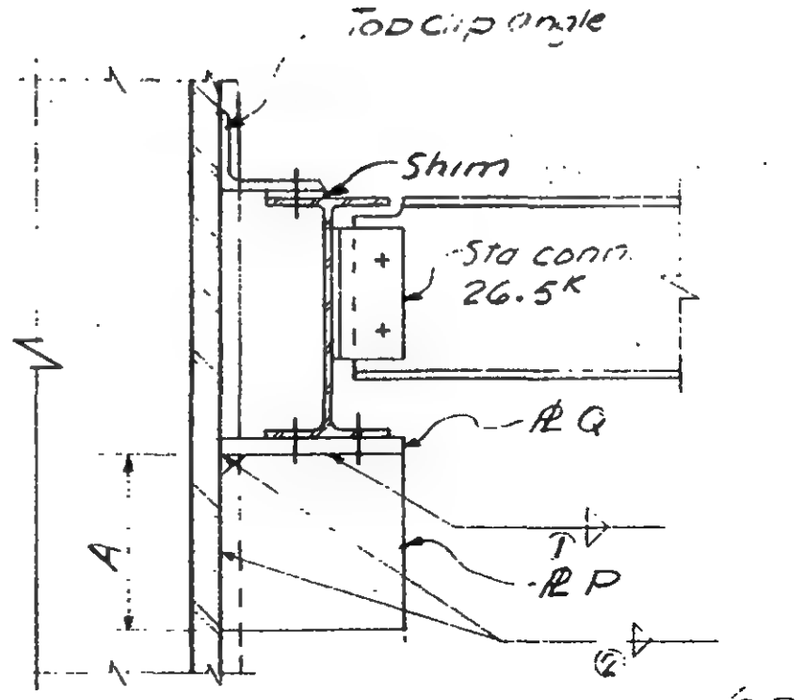

Section b-b

6-AB1-110 Alt.

LICENSED PROFESSIONAL ENGINEER
LESLIE E. ROBERTSON
No. 34360
UNIVERSITY OF THE STATE OF NEW YORK

SKILLING - HELLE - CHRISTIANSEN - ROBERTSON Structural & Civil Engineers

PROJECT THE WORLD TRADE CENTER | TITLE SCHEDULE FOR DETAIL 303 A, B | DATE 9-15-67

REVISIONS

	303A	303B				
PLATES						
P	1/2"	5/8"				
Q	1/2"	5/8"				
DIMENSIONS						
A	1'-0"	1'-0"				
BOLTS						
K	4-3/4"ϕ	4-3/4"ϕ				
WELDS						
①	3/8	5/16				
②	3/8	—				
③	—	C.P.				

6-ABI-110.1

SKILLING - HELLE - CHRISTIANSEN - ROBERTSON Structural & Civil Engineers

PROJECT THE WORLD TRADE CENTER | TITLE CONNECTION DETAIL 303 D | DATE 1-24-68

REVISIONS

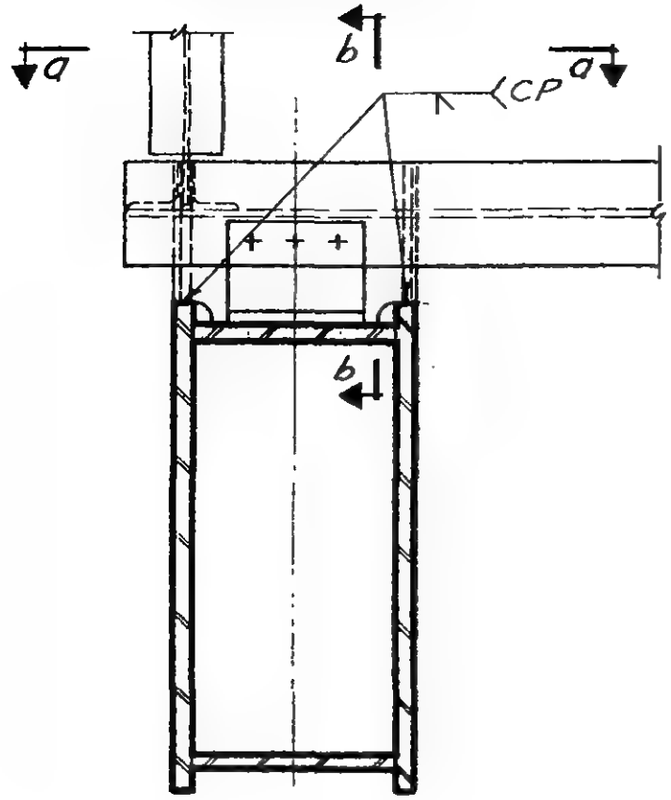

Plan

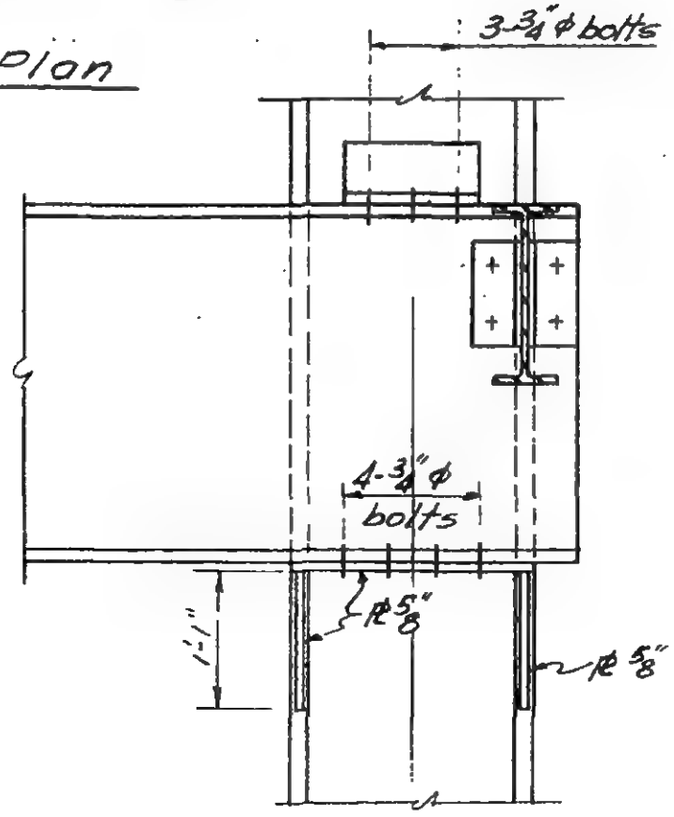

Section a-a

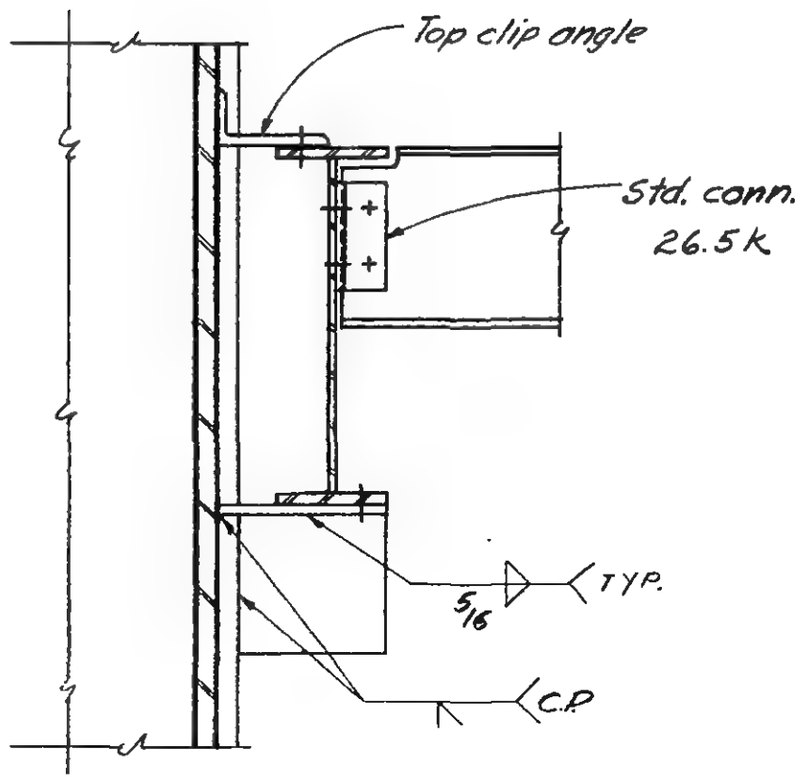

Section b-b

LICENSED PROFESSIONAL ENGINEER
LESLIE E. ROBERTSON
No. 34360
UNIVERSITY OF THE STATE OF NEW YORK

G-AB1-110.2

WORTHINGTON, SKILLING, HELLE & JACKSON — Civil & Structural Engineers

PROJECT: THE WORLD TRADE CENTER | TITLE: CONNECTION DETAIL , 304A | DATE: 6-5-67

REVISIONS
9-15-67
11-10-67
11-14-67

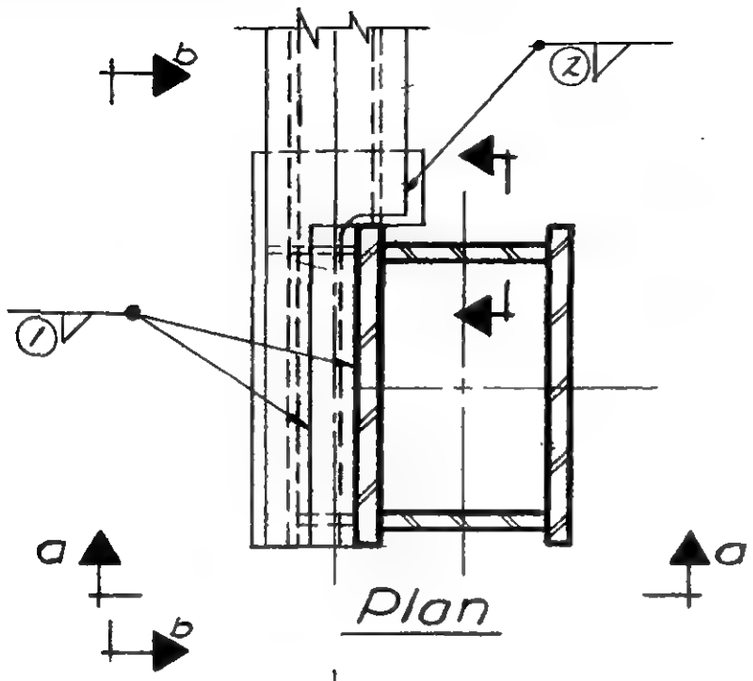

Plan

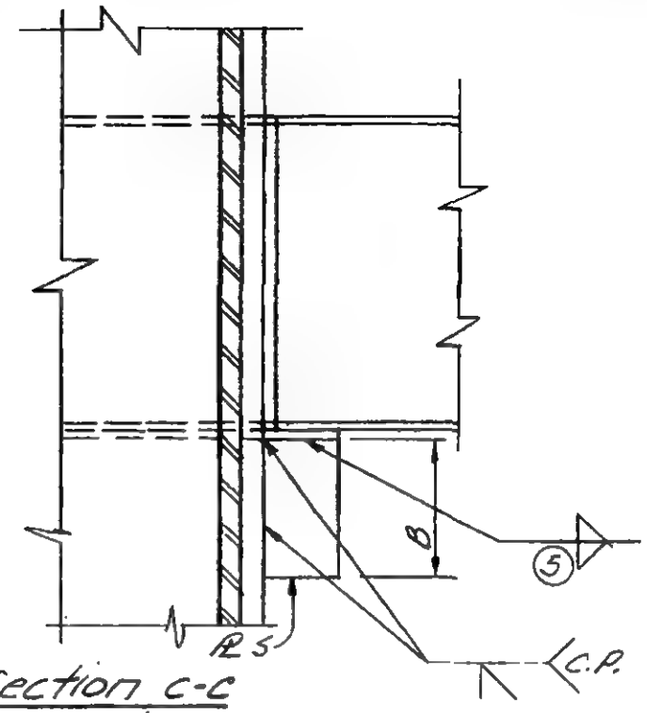

Section C-C

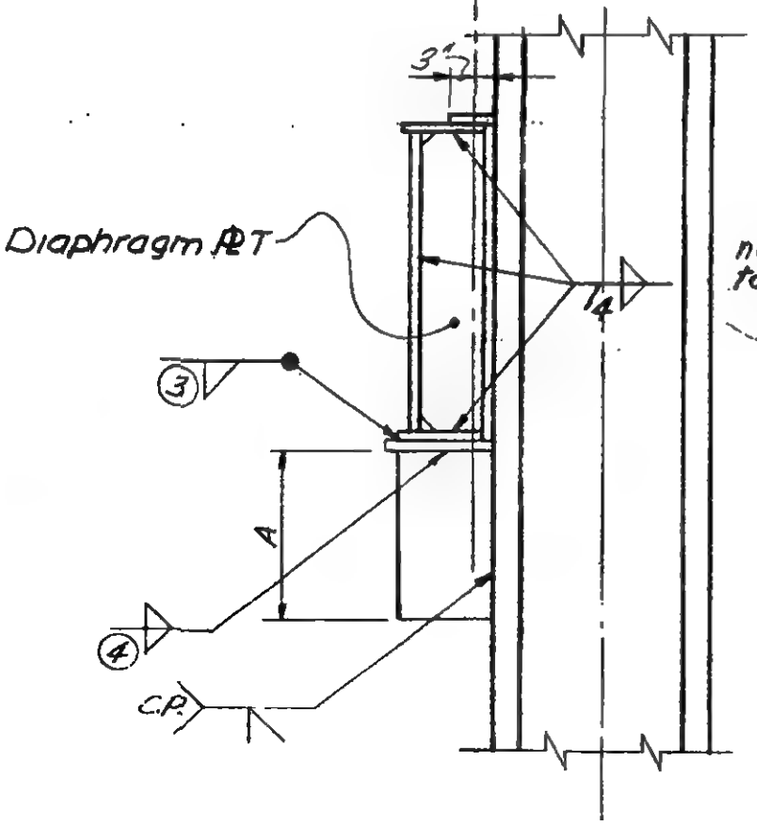

Section a-a

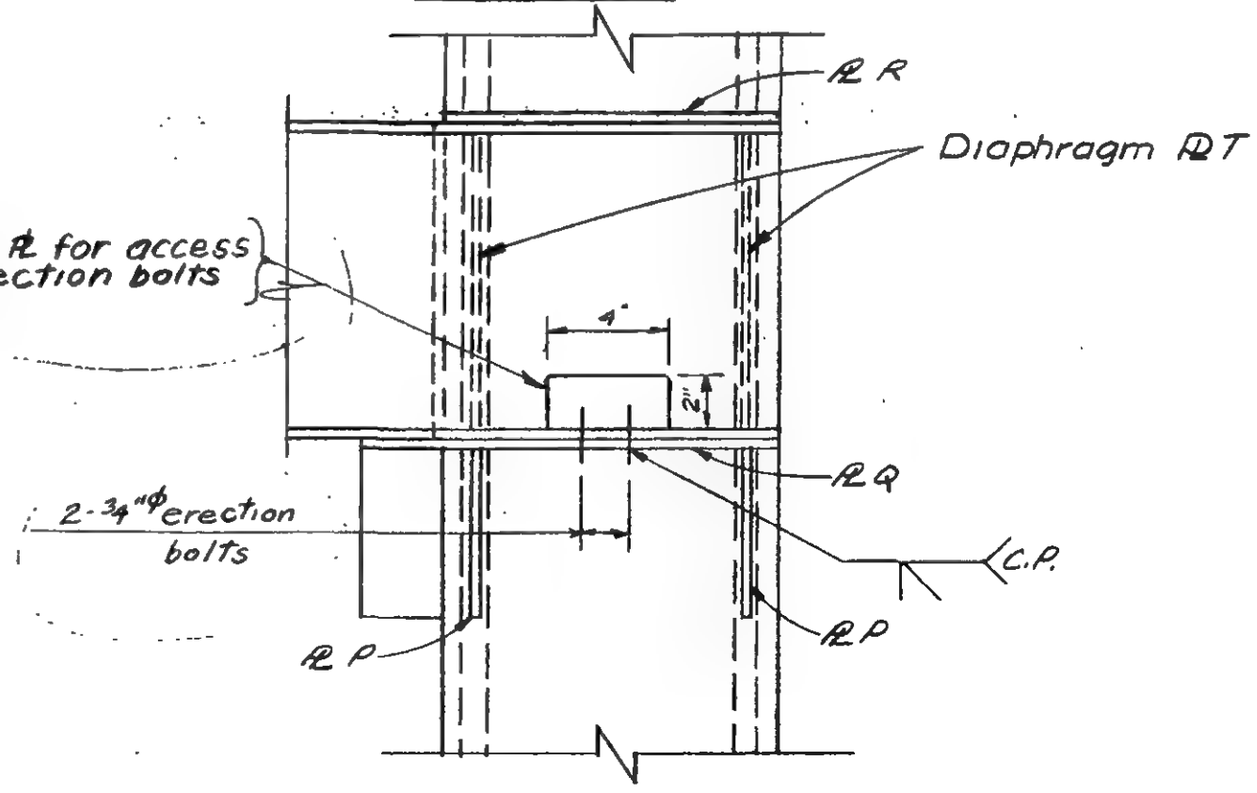

Section b-b

LICENSED PROFESSIONAL ENGINEER
LESLIE E. ROBERTSON
No. 34360
UNIVERSITY OF THE STATE OF NEW YORK

G-AB1-111

SKILLING - HELLE - CHRISTIANSEN - ROBERTSON Structural & Civil Engineers

PROJECT THE WORLD TRADE CENTER | TITLE SCHEDULE FOR DETAIL 304A | DATE 9-15-67

REVISIONS

11-10-67

	304A
PLATE	
P	1/2"
Q	1/2"
R	3/8"
S	5"x5/8"
T	3/8
DIMENSION	
A	0'-10"
B	0'-10"
WELD	
①	5/16
②	5/16
③	5/16
④	5/16
⑤	5/16

6-AB1-111.1

WORTHINGTON, SKILLING, HELLE & JACKSON — Civil & Structural Engineers

PROJECT WORLD TRADE CENTER | TITLE CONNECTION DETAIL 305 | DATE 7/20/67

REVISIONS

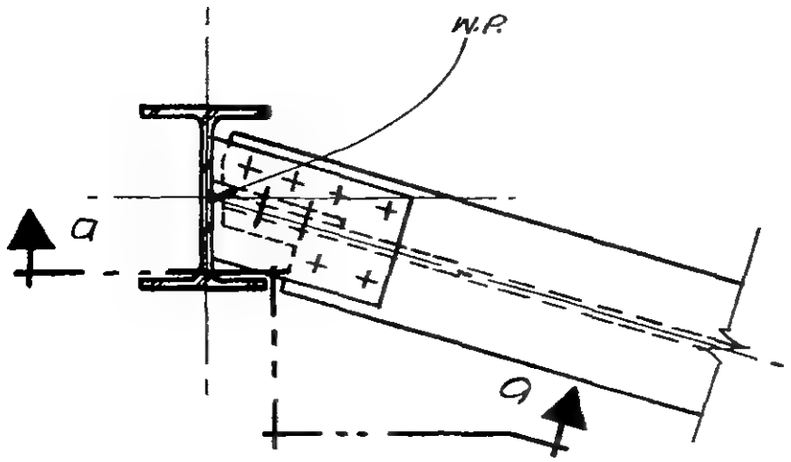

PLAN

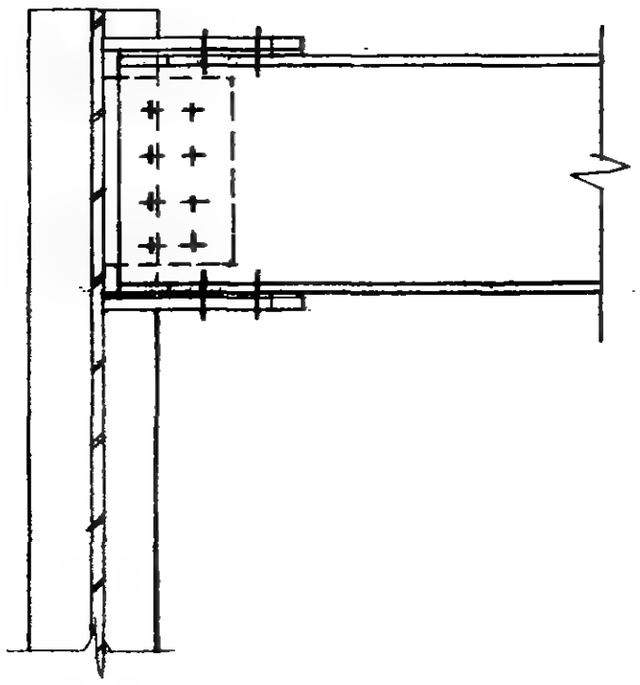

SECTION a-a

LICENSED PROFESSIONAL ENGINEER
LESLIE E. ROBERTSON
No. 34360
UNIVERSITY OF THE STATE OF NEW YORK

SKILLING - HELLE - CHRISTIANSEN - ROBERTSON — Structural & Civil Engineers

PROJECT THE WORLD TRADE CENTER | TITLE CONNECTION DETAIL 306 A,B,C | DATE 6-5-67

REVISIONS
9-15-67
10-2-67
11-10-67

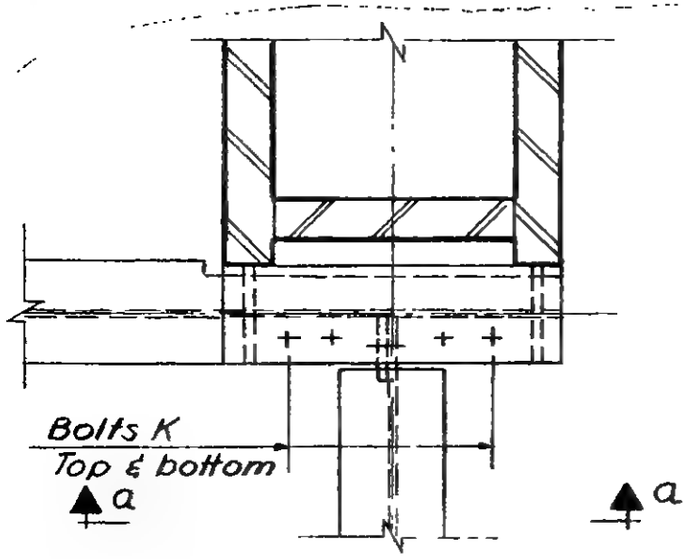

Plan
Detail 306 A

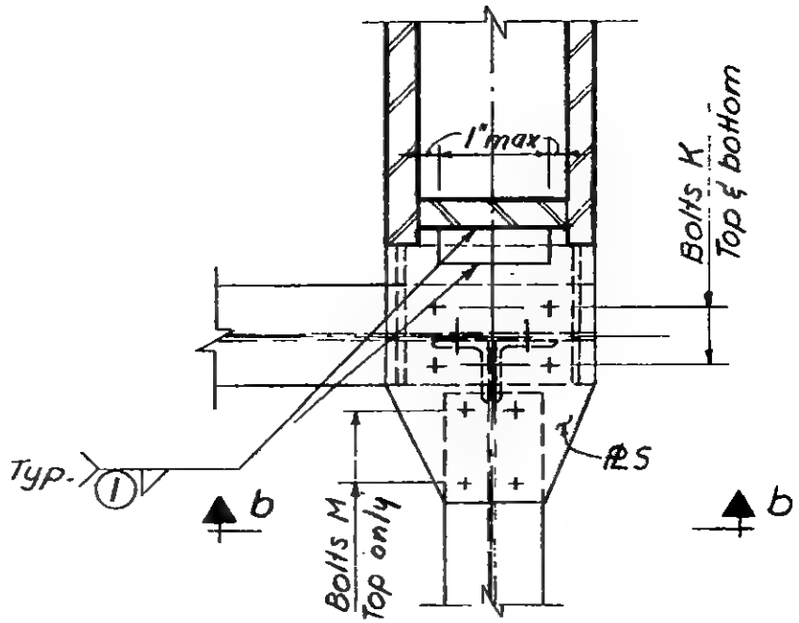

Plan
Detail 306 B & C

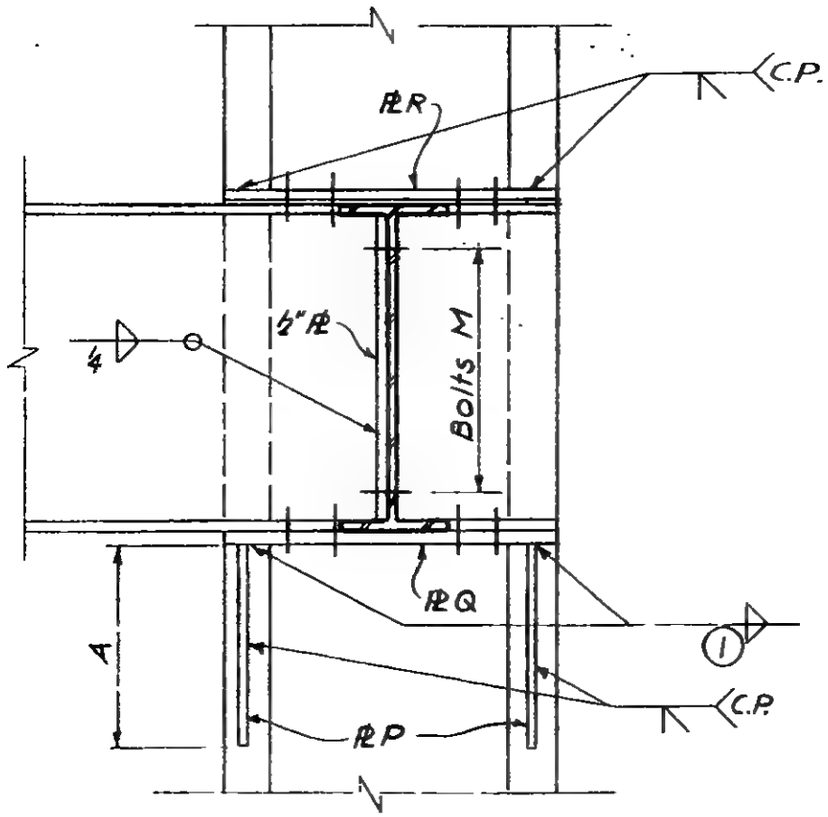

Section a-a

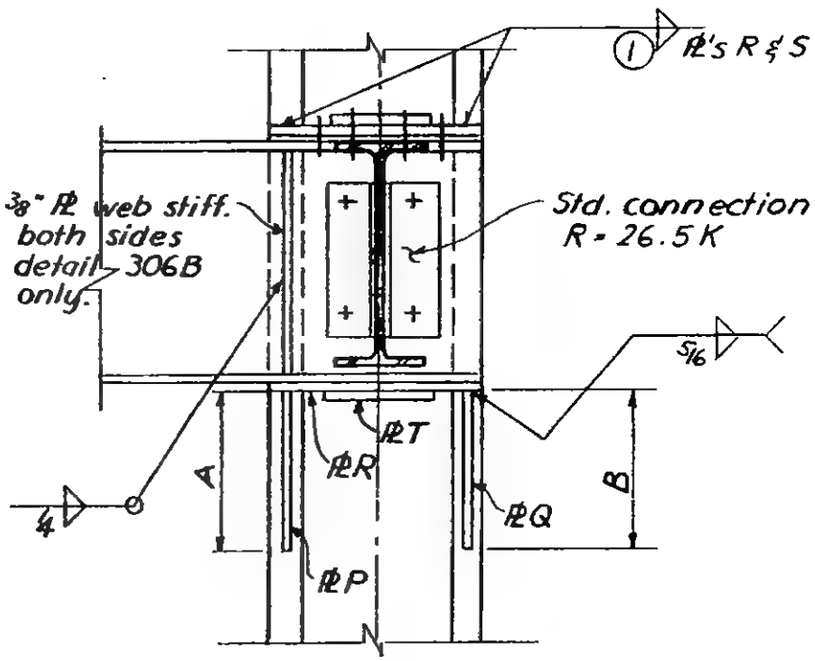

Section b-b

LICENSED PROFESSIONAL ENGINEER
LESLIE E. ROBERTSON
No. 34360
UNIVERSITY OF THE STATE OF NEW YORK

6-ABI-113

SKILLING - HELLE - CHRISTIANSEN - ROBERTSON Structural & Civil Engineers

PROJECT THE WORLD TRADE CENTER | TITLE SCHEDULE FOR DETAIL 306 A, B, C, D | DATE 9-15-67

REVISIONS
10-2-67
10-31-67
11-10-67

REF. DWG.	6-ABI-113	6-ABI-113	6-ABI-113	6-ABI-113.2		
	306 A	306 B	306 C	306 D		
PLATES				See dwg.		
P	3/4"	3/4"	1/2"			
Q	3/4"	—	1/2"			
R	1/2"	3/4"	1/2"			
S	—	1/2"	1/2"			
T	—	3/8"	3/8"			
DIMENSIONS						
A	1'-0"	1'-2"	1'-0"			
B	—	—	1'-0"			
BOLTS						
K	4 - 7/8" ϕ	4 - 3/4" ϕ	4 - 3/4" ϕ			
L	—	—	—			
M	8 - 3/4" ϕ	4 - 7/8" ϕ	4 - 7/8" ϕ			
WELDS						
①	5/16	1/4	1/4			

6-ABI-113.1

SKILLING - HELLE - CHRISTIANSEN - ROBERTSON Structural & Civil Engineers

PROJECT	TITLE	DATE
THE WORLD TRADE CENTER	CONNECTION DETAIL 306 D	11-10-67

REVISIONS

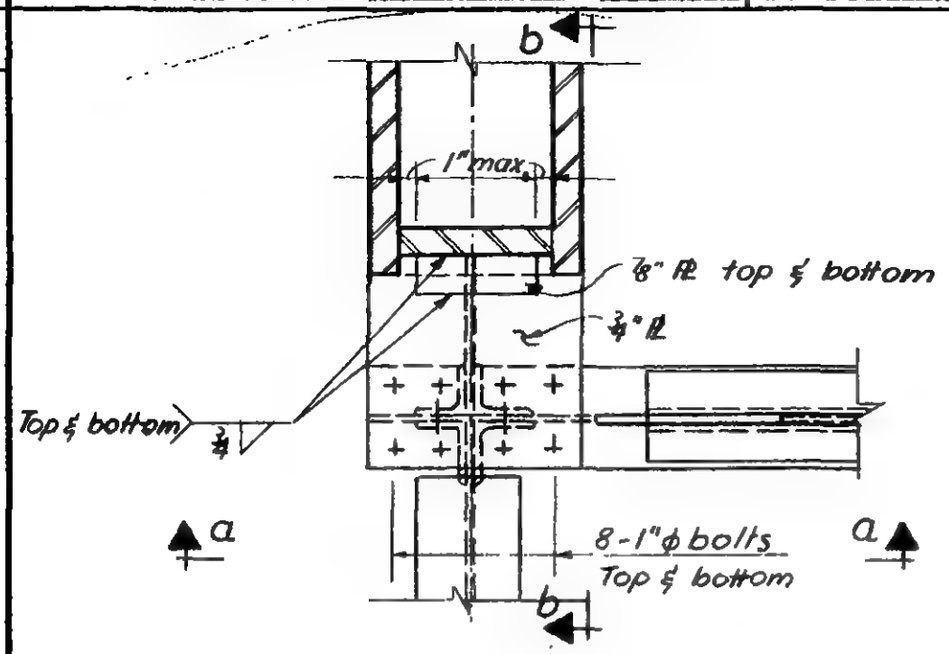

Plan

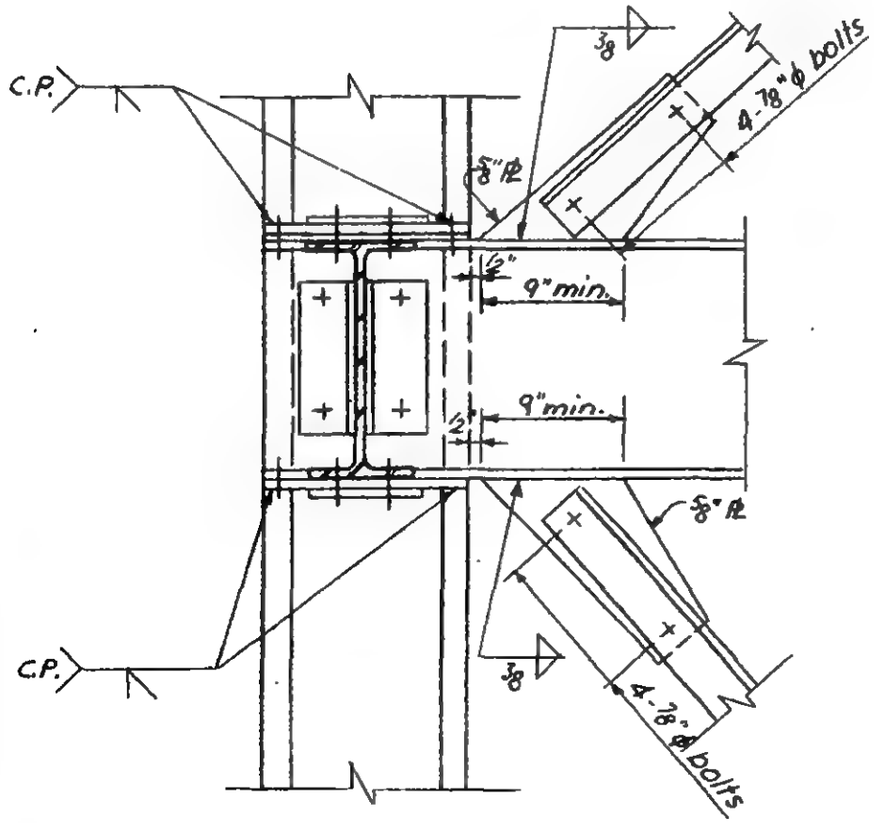

Section a-a

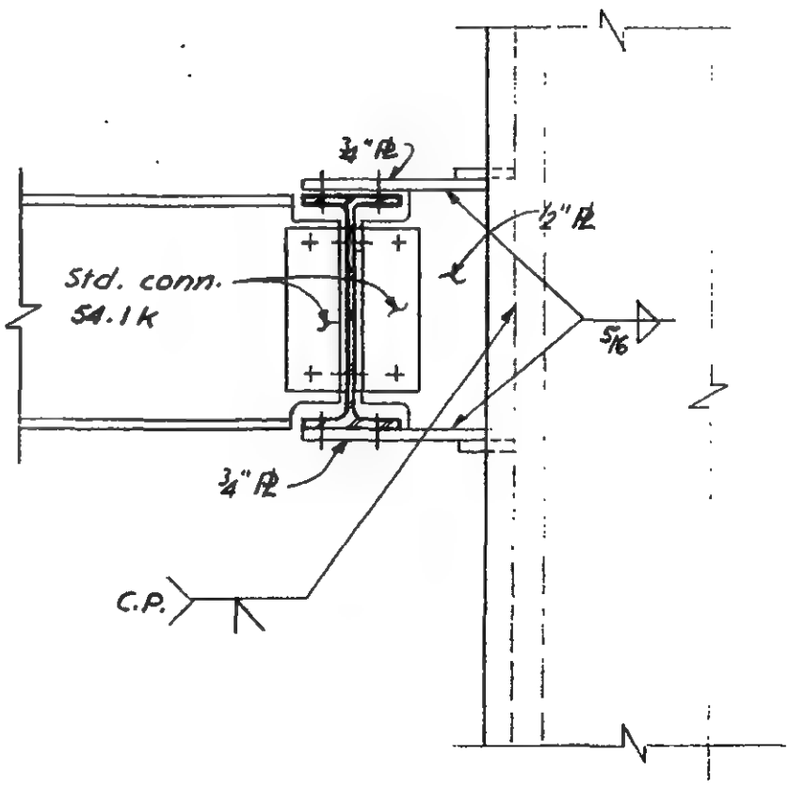

Section b-b

LICENSED PROFESSIONAL ENGINEER
LESLIE E. ROBERTSON
No. 34360
UNIVERSITY OF THE STATE OF NEW YORK

6-ABI-113.2

WORTHINGTON, SKILLING, HELLE & JACKSON — Civil & Structural Engineers

PROJECT THE WORLD TRADE CENTER | TITLE CONNECTION DETAIL 307 A,B | DATE 5-9-67

REVISIONS

7-5-67
7-28-67

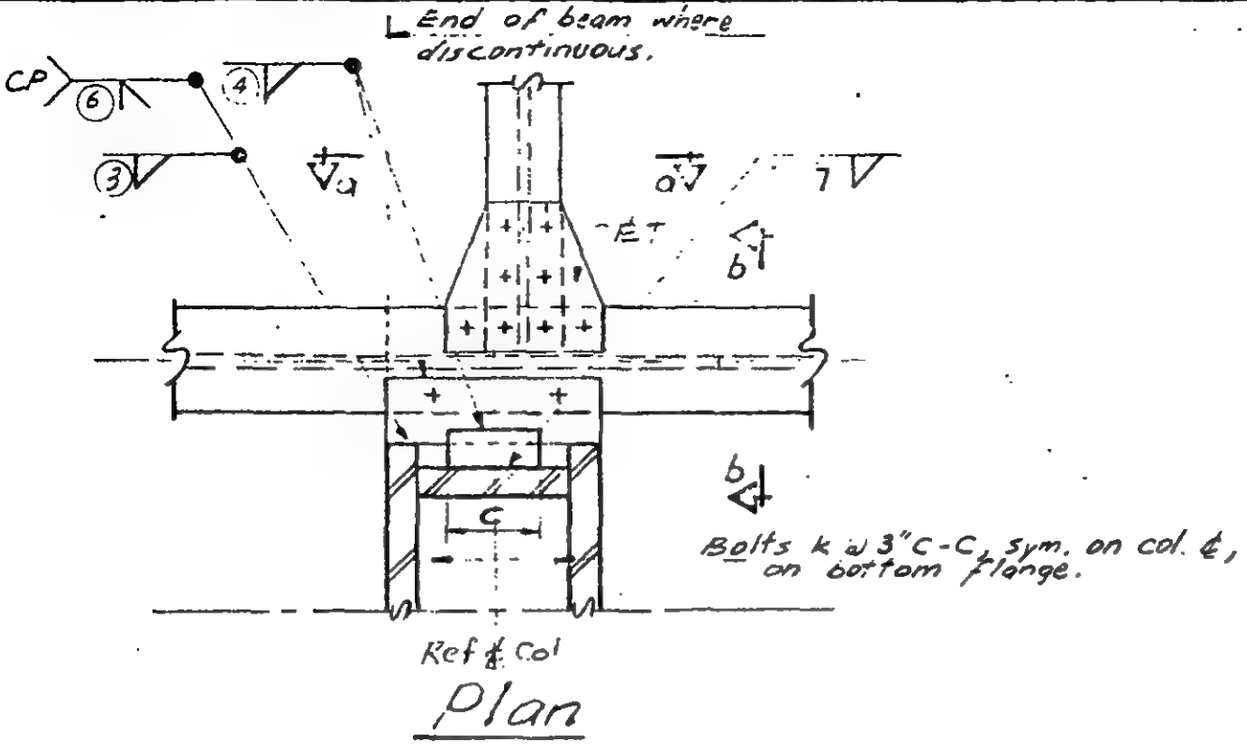

Plan

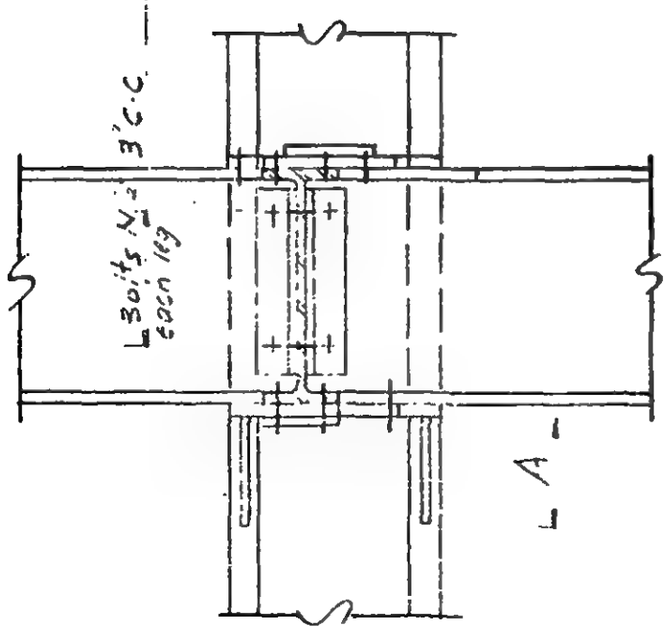

Section a-a

Bolts L @ 3"C-C each flange sym. on beam ℄

Bolts M @ 3"C-C each flange

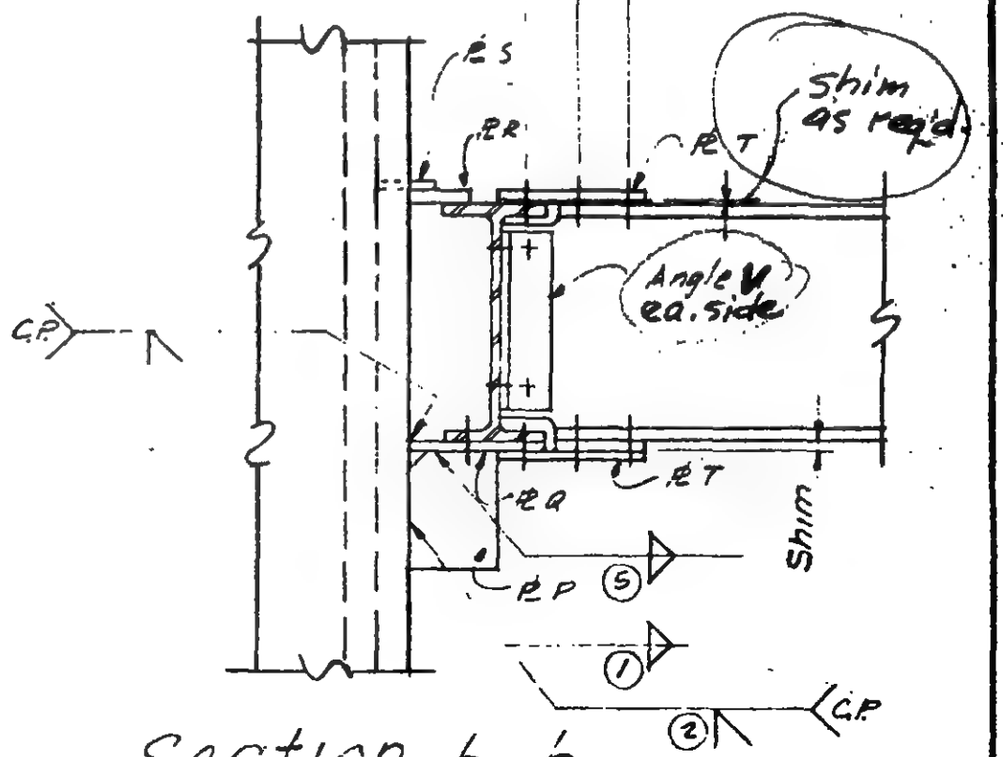

Section b-b

6-AB1-114

WORTHINGTON, SKILLING, HELLE & JACKSON — Civil & Structural Engineers

PROJECT: THE WORLD TRADE CENTER | TITLE: SCHEDULE FOR DETAIL 307 A-G | DATE: 7-25-67

REVISIONS
-26-67
8-5-67

REF. DWG.	G-AB1-114	G-AB1-114	G-AB1-114.2	G-AB1-114.2	G-AB1-114.2	G-AB1-114.2
	307 A	307 B	307 C	307 D	307 E	307 F, G
PLATES						
P	3/4"	24" x 1/2"	5/8"	5/8"	5/8"	1/2"
Q	3/4	7" x 1"	5/8"	5/8"	5/8"	1"
R	5/16	1 1/2" x 5/8"	5/16"	5/16"	5/16"	1"
S	—	24" x 3/8"	5/16	5/16"	—	—
T	—	3/8"	—	—	—	—
U	—	—	5/16"	5/16"	—	—
ANGLES						
V	4 x 3 1/2 x 5/16 x 0'-9"	4 x 3 1/2 x 5/16 x 0'-9"	4 x 3 1/2 x 5/16	4 x 3 1/2 x 5/16	4 x 3 1/2 x 5/16	4 x 3 1/2 x 5/16
DIMENSIONS						
A	1'-0"	1'-4"	1'-2"	1'-2"	1'-4"	1'-2
C	—	0'-8"	—	—	—	—
BOLTS						
K	4-3/4"Φ(A325)	—	—	—	—	—
L	—	6-1 1/8"Φ(A325)	8-3/4"Φ	8-3/4"Φ	2-3/4"Φ	12-1"Φ
M	—	6-1 1/8"Φ(A325)	4-7/8"Φ	4-7/8"Φ	—	4-7/8"Φ
N	3-3/4"Φ(A325)	3-3/4"Φ(A325)	3-3/4"Φ	3-3/4"Φ	3-3/4"Φ	3-3/4"Φ
WELDS						
①	—	—	5/16	5/16	—	—
②	C.P.	C.P.	5/16	5/16	—	—
③	—	3/8	5/16	5/16	—	—
④	5/16	—	5/16	5/16	5/16	5/16
⑤	5/16	3/8	5/16	5/16	—	—
⑥	C.P.	C.P	—	—	—	—
⑦	12	12	—	—	—	—

LESLIE E. ROBERTSON REGISTERED PROFESSIONAL ENGINEER No. 34360 STATE OF THE STATE OF NEW YORK

WORTHINGTON, SKILLING, HELLE & JACKSON · Civil & Structural Engineers

PROJECT THE WORLD TRADE CENTER | TITLE CONNECTION DETAIL 307 C, D, E, F, G, H & I | DATE 7-28-67

REVISIONS
8-5-67
9-15-67
11-10-67

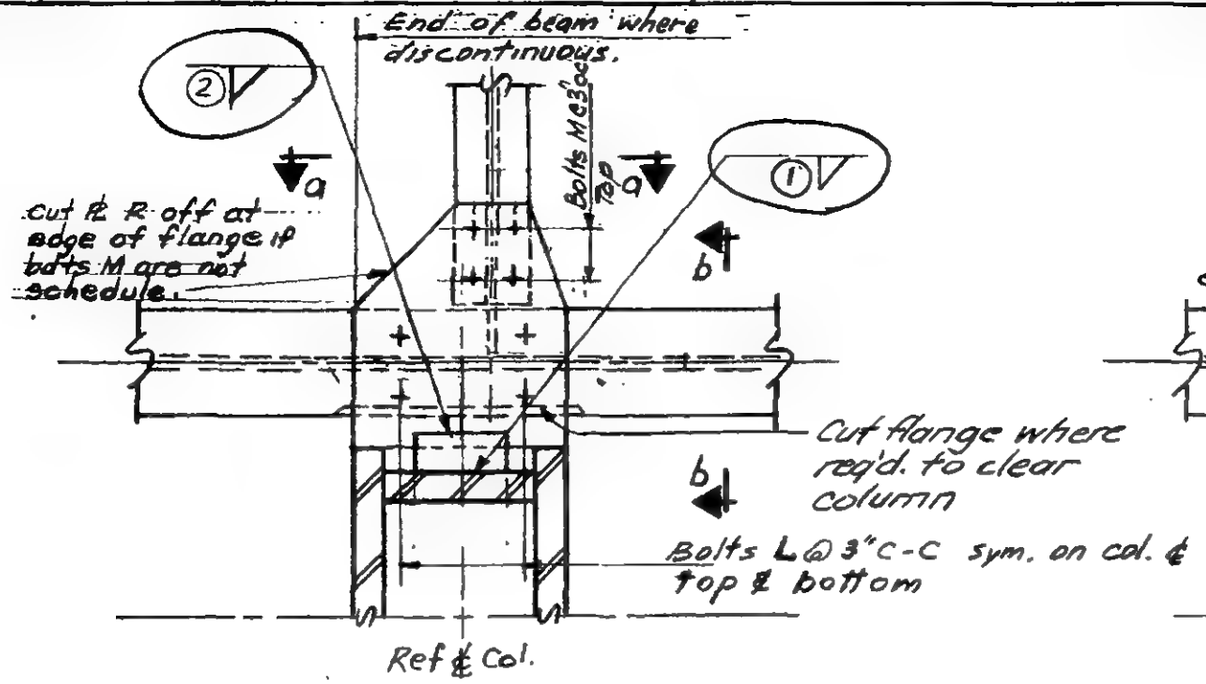

Plan

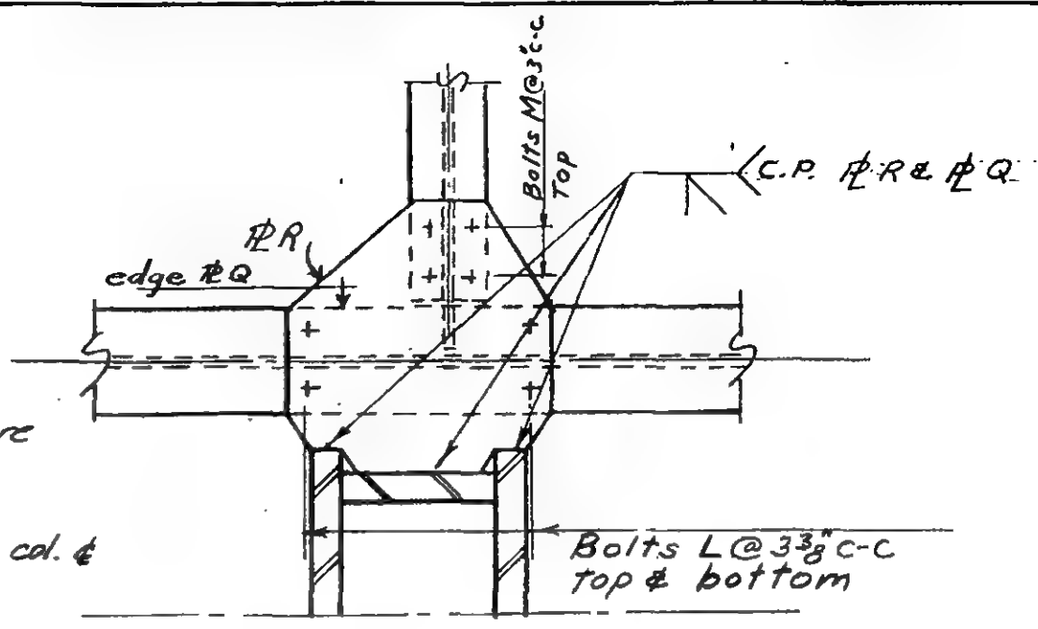

Plan Detail F, G & H only

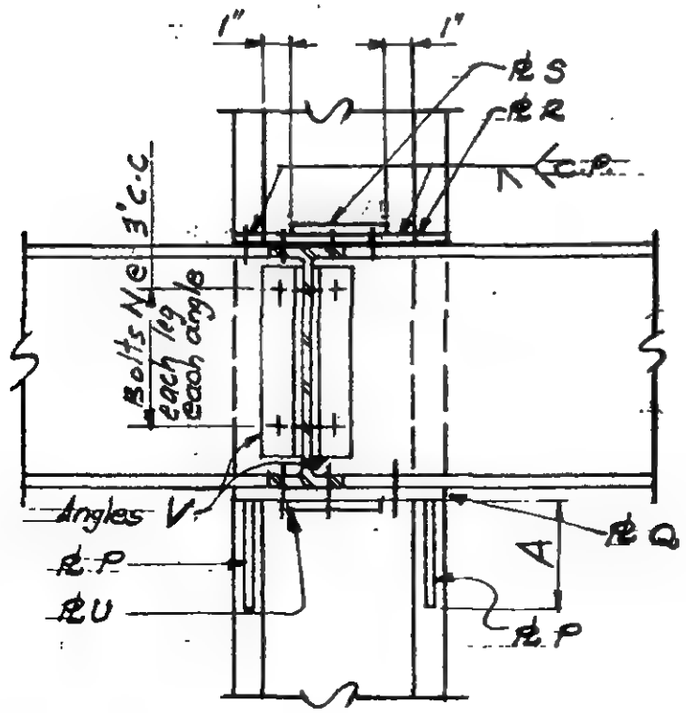

Section a-a

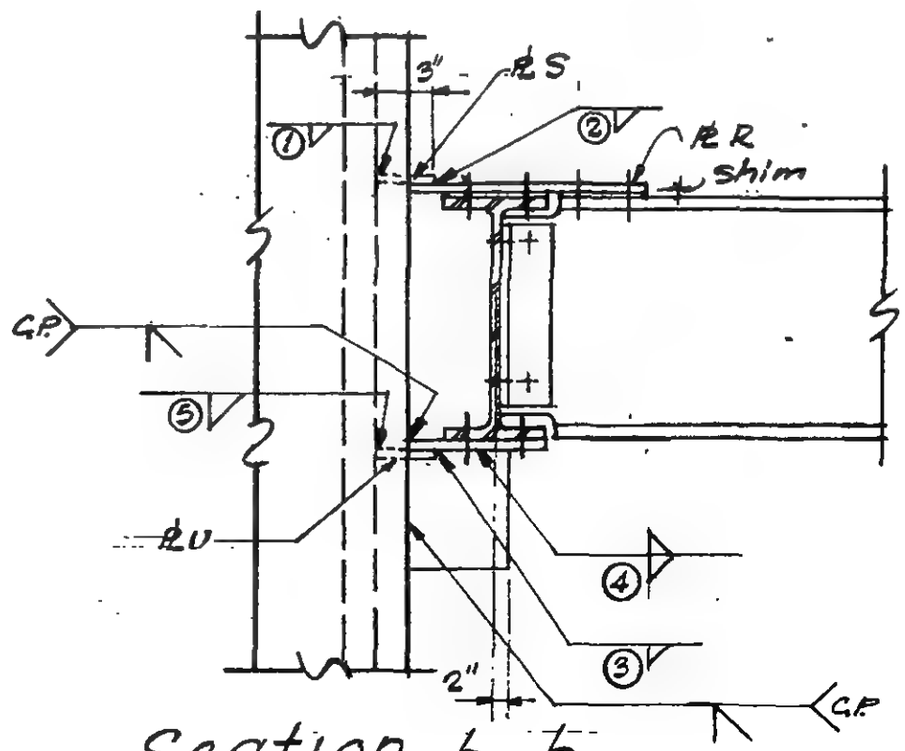

Section b-b

6-AB1-114.2

SKILLING - HELLE - CHRISTIANSEN - ROBERTSON Structural & Civil Engineers

PROJECT THE WORLD TRADE CENTER | TITLE SCHEDULE FOR DETAIL 307H & I | DATE 8-5-67

REVISIONS
1 9-15-67
11-10-67

	307H	307I
PLATES		
P	1/2"	1/2"
Q	1"	1/2"
R	1"	1/2"
S	—	3/8"
T	—	—
U	—	3/8"
ANGLES		
V	4x3 1/2 x 5/16	4x3 1/2 x 5/16
DIMENSIONS		
A	1'-2"	0'-10"
C	—	—
BOLTS		
K	—	—
L	12-1"ϕ	7-3/4"ϕ (one row)
M	4-7/8"ϕ	4-7/8"ϕ
N	3-1"ϕ	3-3/4"ϕ
WELDS		
(1)	—	5/16
(2)	—	5/16
(3)	—	5/16
(4)	5/16	—
(5)	—	5/16
(6)	—	—
(7)	—	—

6-AB1-114.3

SKILLING - HELLE - CHRISTIANSEN - ROBERTSON Structural & Civil Engineers

PROJECT THE WORLD TRADE CENTER | TITLE CONNECTION DETAIL 307 J | DATE 12-21-67

REVISIONS

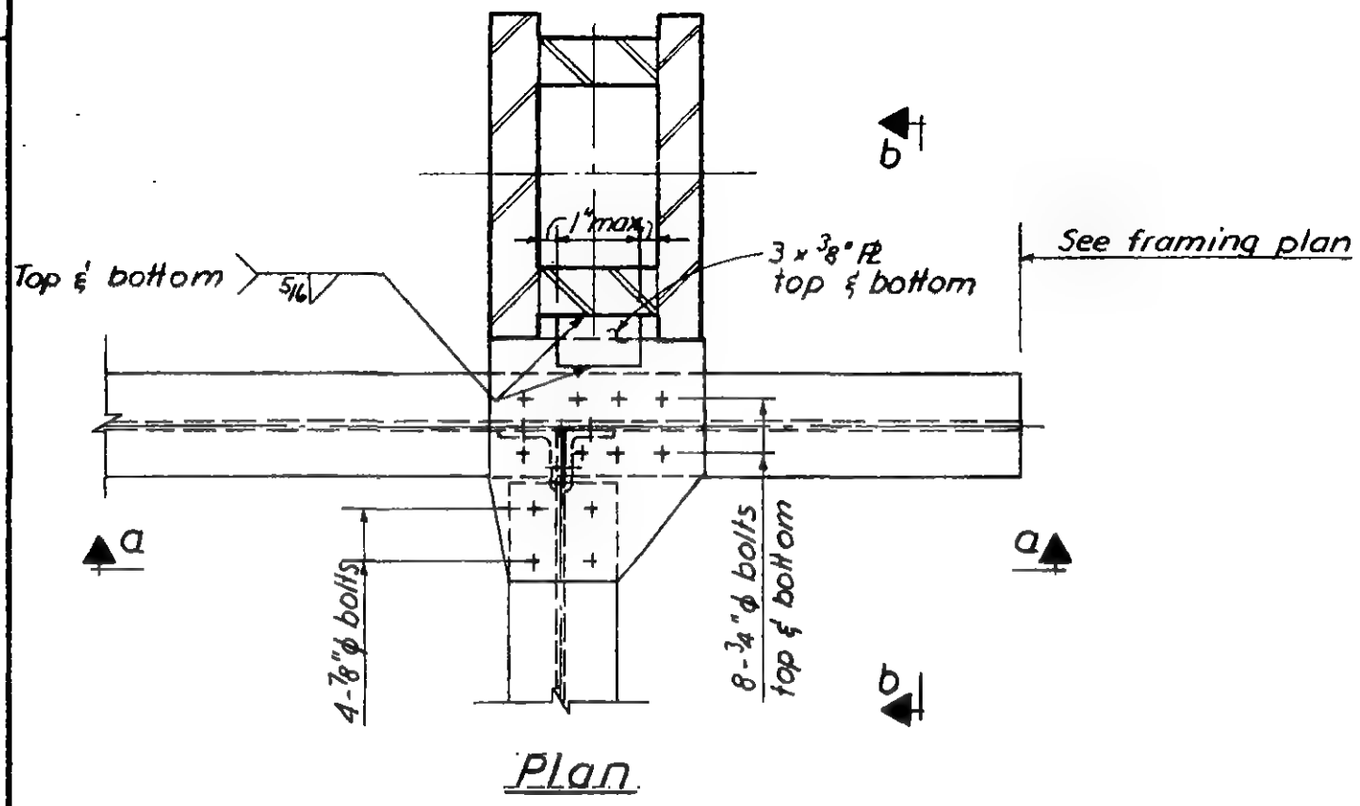

Plan

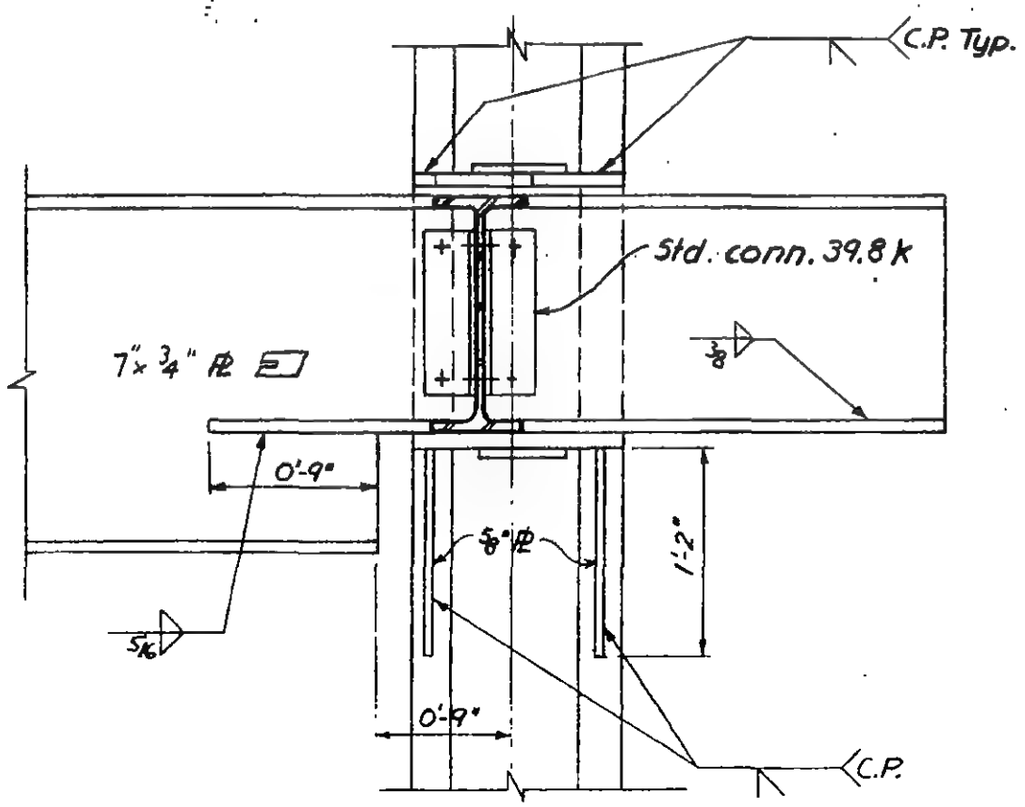

Section a-a

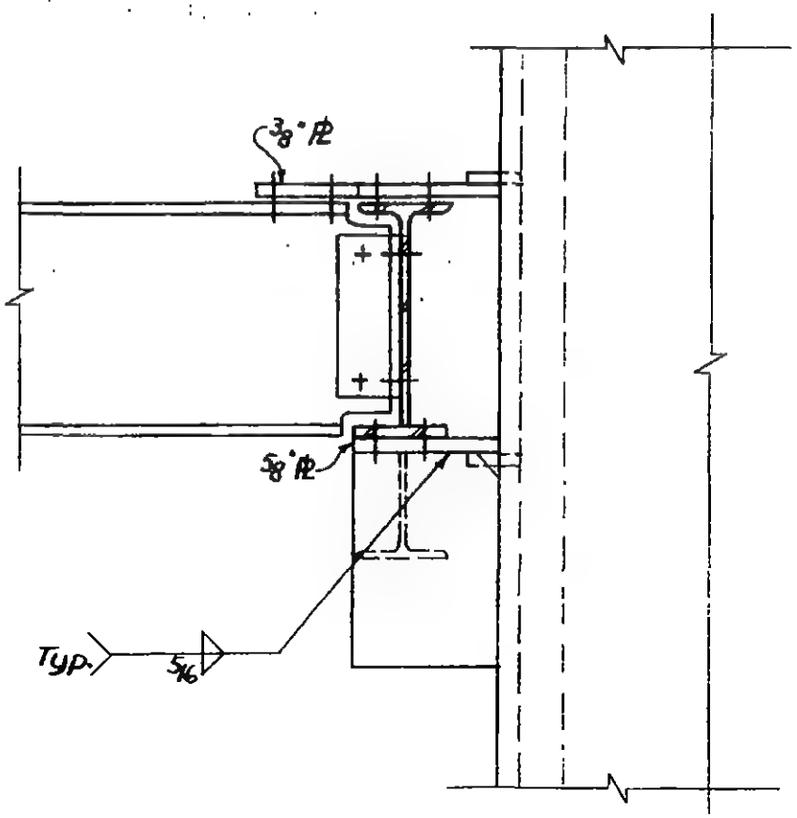

Section b-b

6-ABI-114.4

LICENSED PROFESSIONAL ENGINEER
LESLIE E. ROBERTSON
No. 34360
UNIVERSITY OF THE STATE OF NEW YORK

SKILLING - HELLE - CHRISTIANSEN - ROBERTSON Structural & Civil Engineers

PROJECT THE WORLD TRADE CENTER | TITLE CONNECTION DETAIL 308A | DATE 6-5-67

REVISIONS
9-15-67
11-10-67

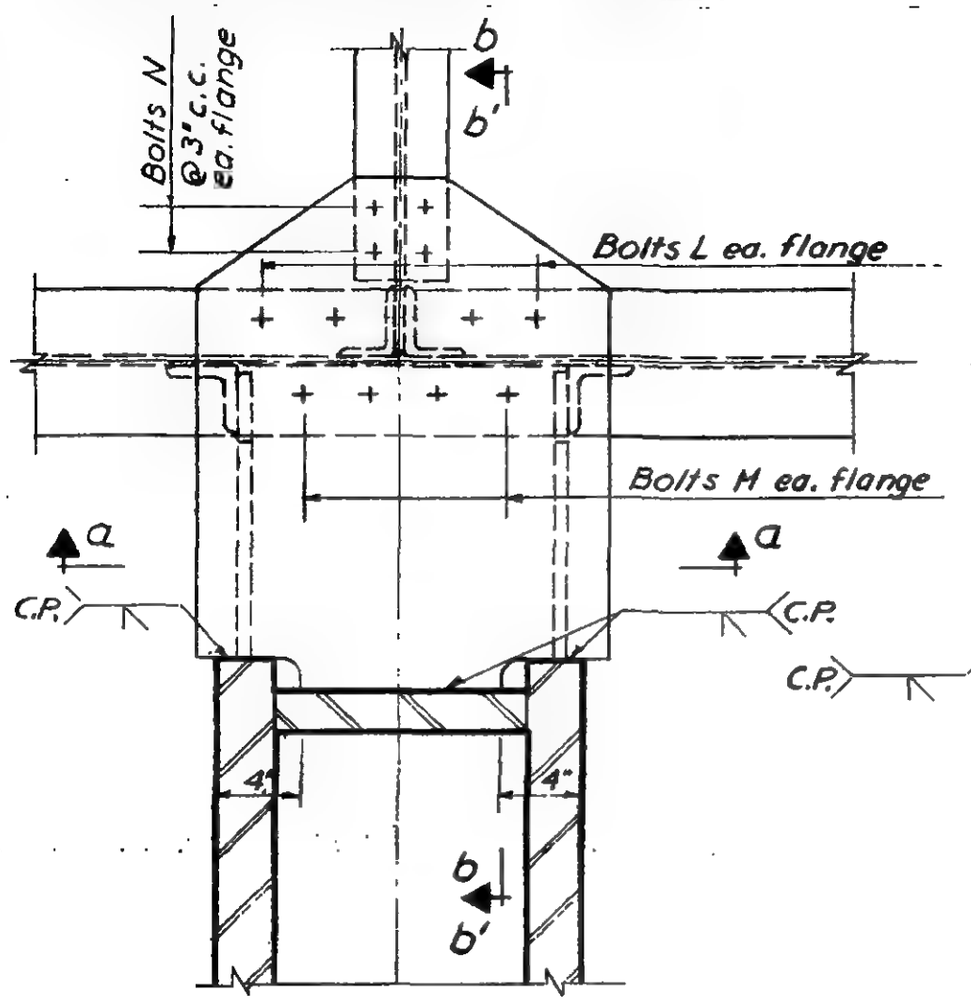

Plan

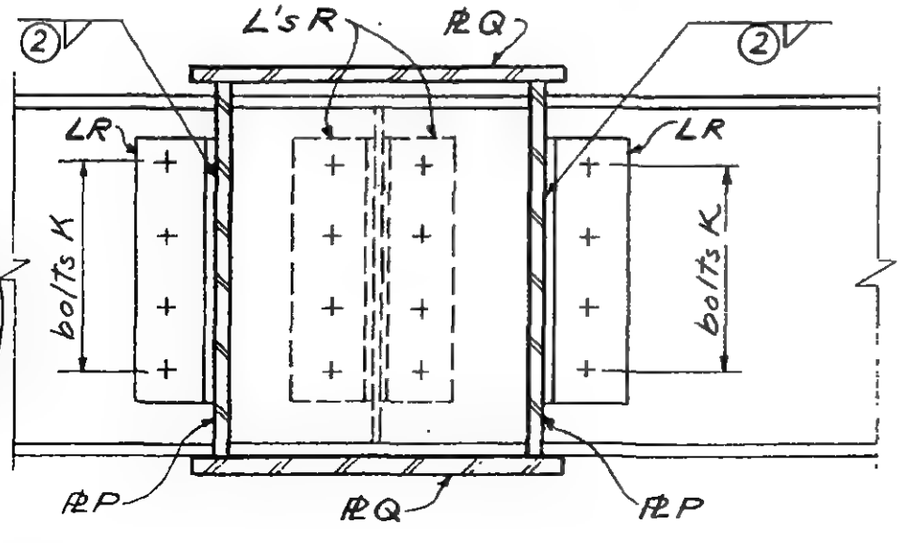

Section a-a

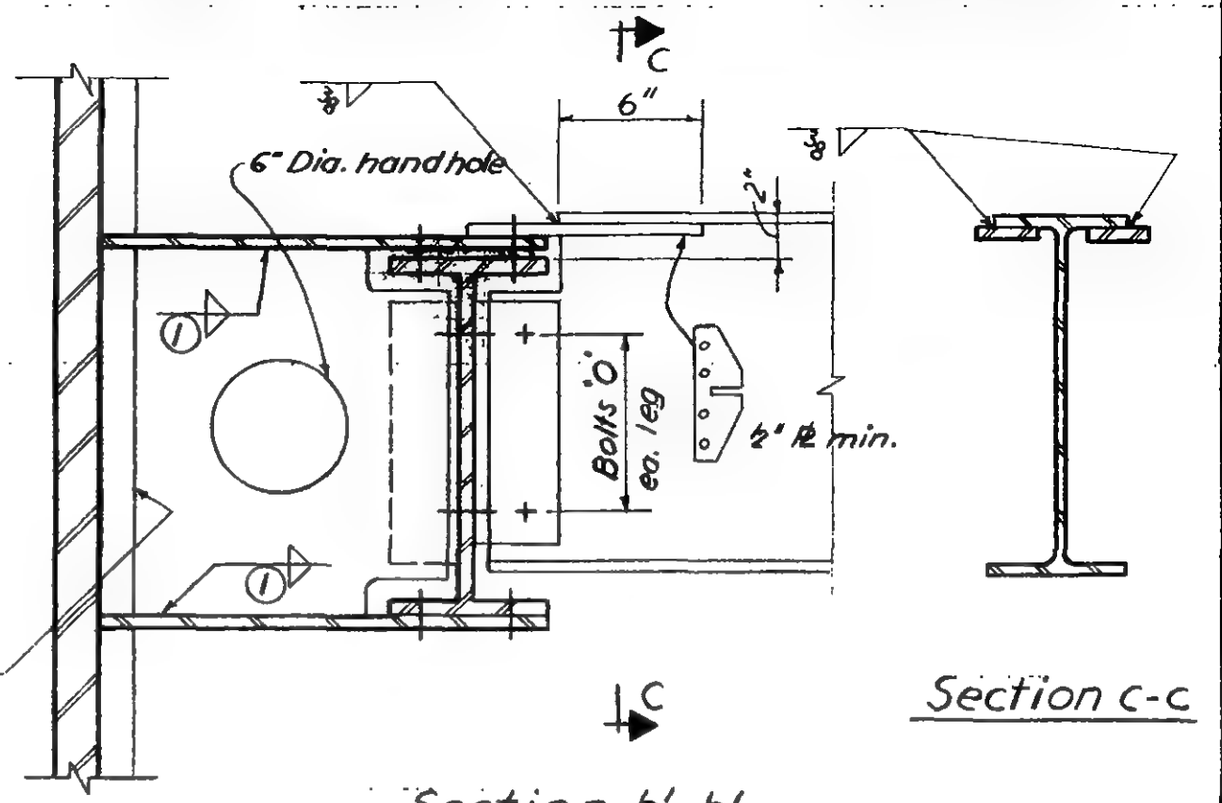

Section c-c

Section b'-b'
for beams at different elevations

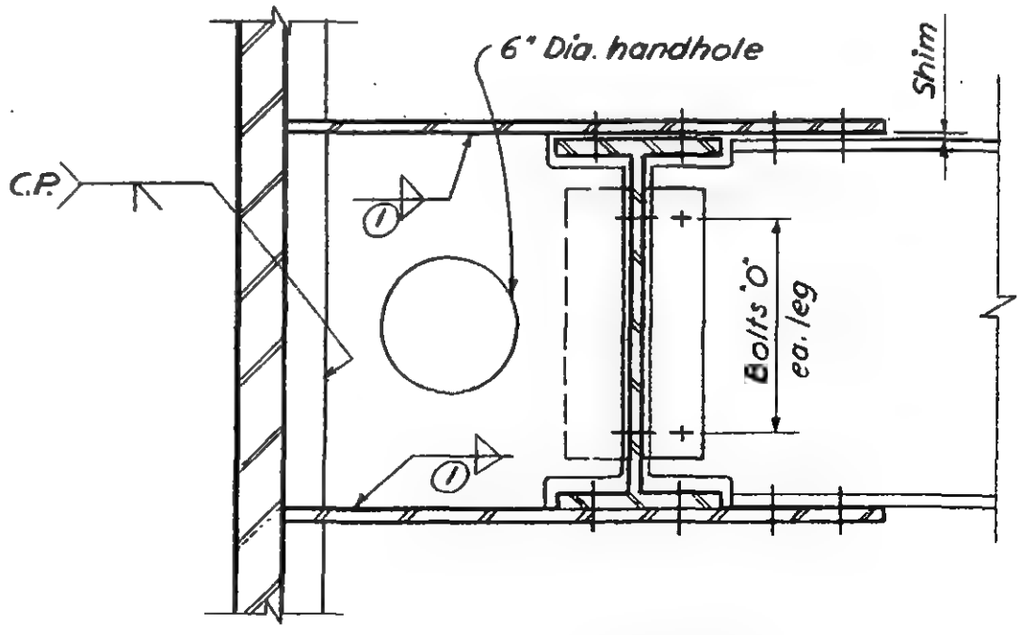

Section b-b
Beams at same elevation

LICENSED PROFESSIONAL ENGINEER
LESLIE E. ROBERTSON
No. 34360
UNIVERSITY OF THE STATE OF NEW YORK

6-ABI-115

SKILLING - HELLE - CHRISTIANSEN - ROBERTSON Structural & Civil Engineers

PROJECT THE WORLD TRADE CENTER | TITLE SCHEDULE FOR DETAIL 308A | DATE 9-15-67

REVISIONS

	308A
PLATES	
P	3/4"
Q	5/8"
ANGLES	
R	4×3 1/2×3/8×0'-11 1/2"
BOLTS	
K	4-7/8"ϕ
L	5-1 1/8"ϕ (A-490)
M	4-1 1/8"ϕ (A490)
N	4-3/4"ϕ
"O"	4-3/4"ϕ
WELDS	
①	5/16
②	5/16

LICENSED PROFESSIONAL ENGINEER
LESLIE E. ROBERTSON
No. 34360
UNIVERSITY OF THE STATE OF NEW YORK

6-ABI-115.1

WORTHINGTON, SKILLING, HELLE & JACKSON — Civil & Structural Engineers

PROJECT: THE WORLD TRADE CENTER | TITLE: CONNECTION DETAIL 309 A | DATE: 6-5-67

REVISIONS
9-15-67

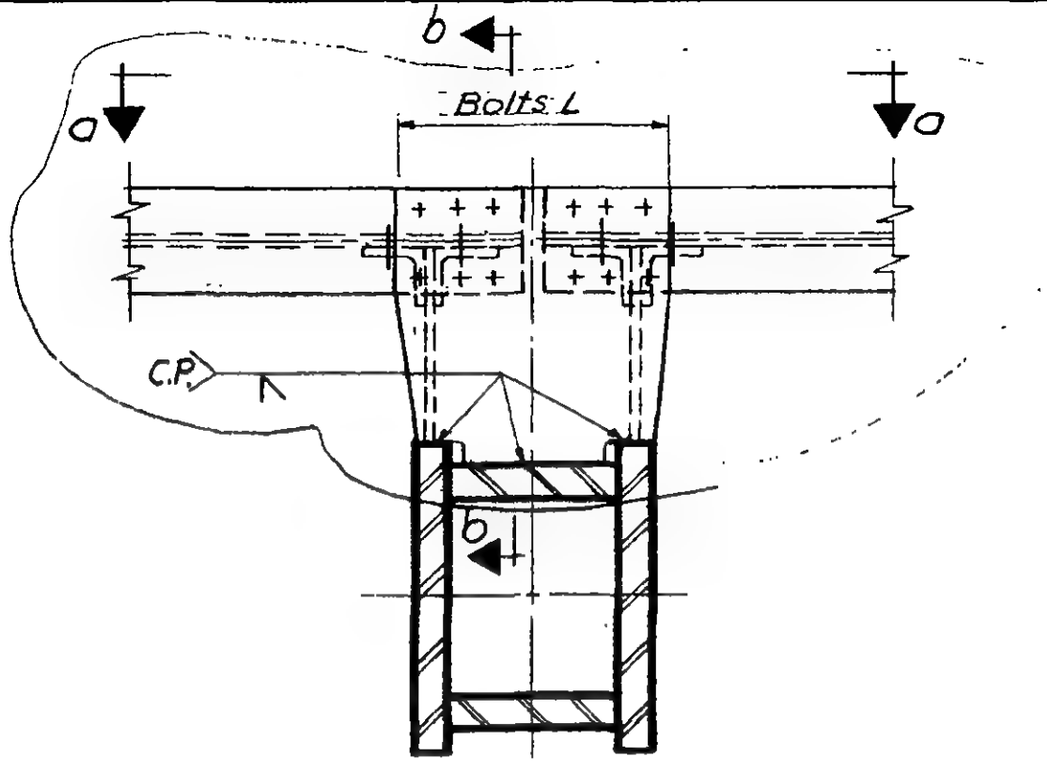

Plan

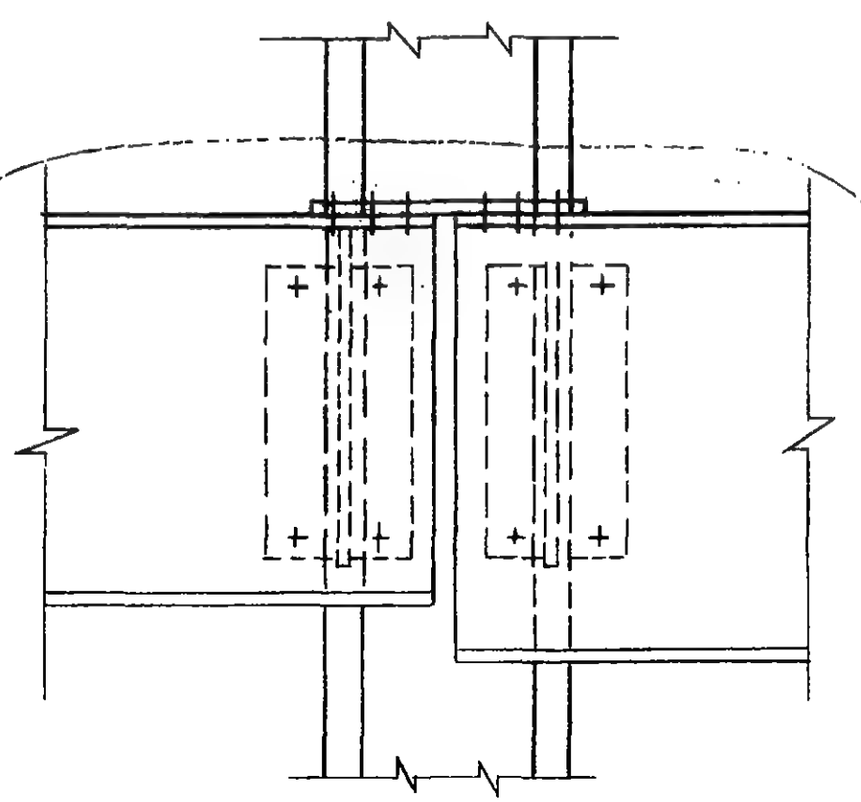

Section a-a

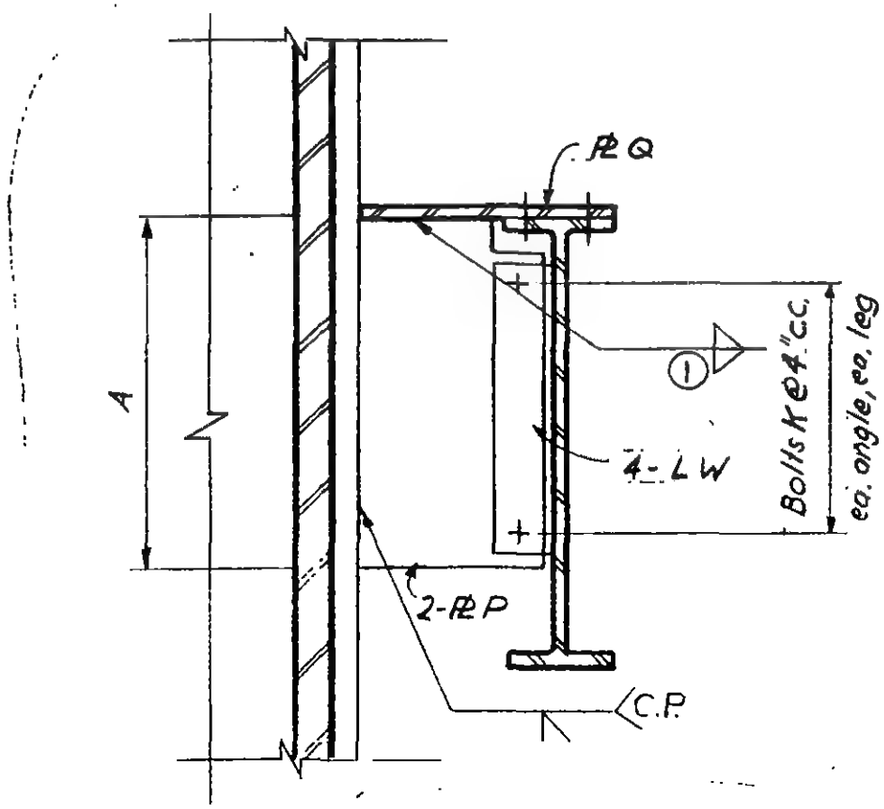

Section b-b

LICENSED PROFESSIONAL ENGINEER
LESLIE E. ROBERTSON
No. 34360
UNIVERSITY OF THE STATE OF NEW YORK

6-AB1-116

SKILLING - HELLE - CHRISTIANSEN - ROBERTSON Structural & Civil Engineers

PROJECT THE WORLD TRADE CENTER | TITLE SCHEDULE FOR DETAIL 309A | DATE 9-15-67

REVISIONS

	309A
PLATES	
P	3/4"
Q	1"
ANGLES	
W	4 x 3 1/2 x 5/16
BOLTS	
K	4 - 3/4" ϕ
L	12 - 1 1/8" ϕ (A490)
DIMENSIONS	
A	1'-8"
WELDS	
①	3/8"

LICENSED PROFESSIONAL ENGINEER LESLIE E. ROBERTSON No. 34360 UNIVERSITY OF THE STATE OF NEW YORK

6-AB1-116.1

WORTHINGTON, SKILLING, HELLE & JACKSON — Civil & Structural Engineers

PROJECT THE WORLD TRADE CENTER | TITLE CONNECTION DETAIL 310 A | DATE 5-1-67

REVISIONS

6-30-67

7-28-67

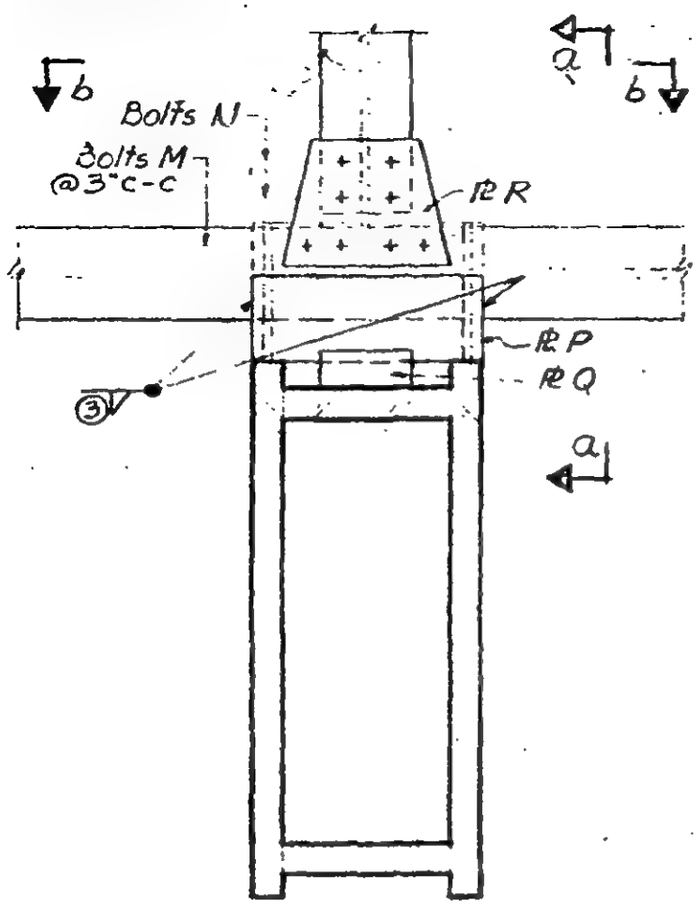

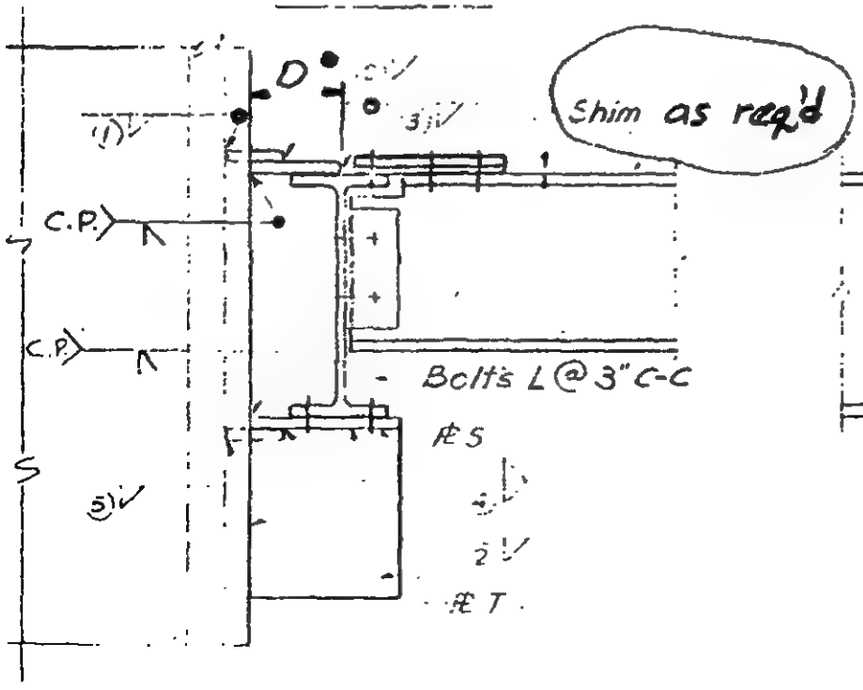

SECTION a-a

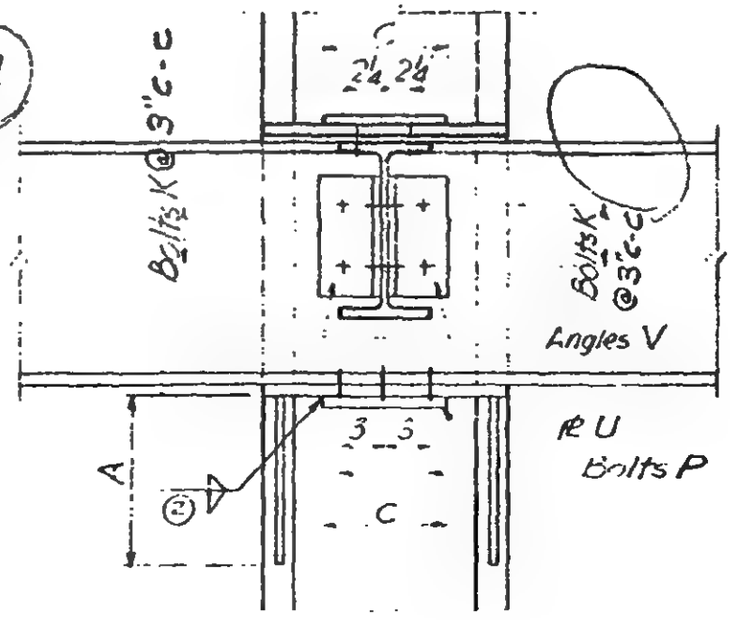

SECTION b-b

6-ABI-117

LICENSED PROFESSIONAL ENGINEER
LESLIE E. ROBERTSON
No. 34360
UNIVERSITY OF THE STATE OF NEW YORK

SKILLING - HELLE - CHRISTIANSEN - ROBERTSON Structural & Civil Engineers

PROJECT THE WORLD TRADE CENTER | TITLE SCHEDULE FOR DETAIL 310 A-(F) | DATE 6-30-67

REVISIONS
7-28-67
10-2-67
12-21-67

REF. DWGS.	6-ABI-117	6-ABI-117.2	6-ABI-117.2	6-ABI-117.2	6-ABI-117.2	6-ABI-117.2
	310 A	310 B	310 C	310 D	310 E	310 F
PLATES						
P	8" x 3/4" x 1'-2"	—	—	—	—	—
Q	4" x 1/2" x 0'-8"	5/16"	1/2"	—	1/2"	3/4"
R	1/2"	5/16"	3/8"	5/16"	5/8"	1"
S	12 1/2" x 3/4" x 1'-2"	5/8"	3/4"	3/4"	5/8"	5/8"
T	12 1/2" x 5/8"	8" x 5/8"	8" x 3/4"	8" x 3/4"	8" x 5/8"	8" - 1/2"
U	4" x 1/2" x 0'-8"	5/16"	3/8"	—	1/2"	1/2"
ANGLES						
V	4 x 3 1/2 x 5/16 x 0'-8 1/2"	4 x 3 1/2 x 5/16	4 x 3 1/2 x 5/16	4 x 3 1/2 x 5/16	4 x 3 1/2 x 5/16	4 x 3 1/2 x 5/16
DIMENSIONS						
A	12"	1'-2"	1'-2"	1'-2"	1'-4"	1'-2"
C	8"	—	—	—	—	—
D	8"	—	—	—	—	—
BOLTS						
K	2 - 3/4" ϕ (A325)	3 - 3/4" ϕ	3 - 3/4" ϕ	3 - 3/4" ϕ	3 - 3/4" ϕ	3 - 3/4" ϕ
L	2 - 3/4" ϕ (A325)	3 - 3/4" ϕ	3 - 3/4" ϕ	3 - 3/4" ϕ	3 - 3/4" ϕ	3 - 3/4" ϕ
M	4 - 7/8" ϕ (A325)	—	—	—	—	—
N	4 - 7/8" ϕ (A325)	4 - 7/8" ϕ	6 - 7/8" ϕ	—	4 - 3/4" ϕ	4 - 1" ϕ
P	6 - 3/4" ϕ (A325)	8 - 3/4" ϕ	8 - 3/4" ϕ	4 - 3/4" ϕ	4 - 3/4" ϕ	4 - 3/4" ϕ
WELDS						
①	1/2	5/16	1/2	—	7/16	11/16
②	7/16	5/16	1/2	—	7/16	11/16
③	3/8	5/16	5/16	—	7/16	5/16
④	1/2	5/16	5/16	5/16	3/8	3/8
⑤	1/2	5/16	3/8	—	7/16	5/16

LICENSED PROFESSIONAL ENGINEER LESLIE E. ROBERTSON No. 34360 UNIVERSITY OF THE STATE OF NEW YORK

6-ABI-117.1

WORTHINGTON, SKILLING, HELLE & JACKSON — Civil & Structural Engineers

PROJECT: THE WORLD TRADE CENTER | TITLE: CONNECTION DETAIL 310 B, C, D, E, F, G, I | DATE: 7-28-67

REVISIONS

10-2-67
2-9-68

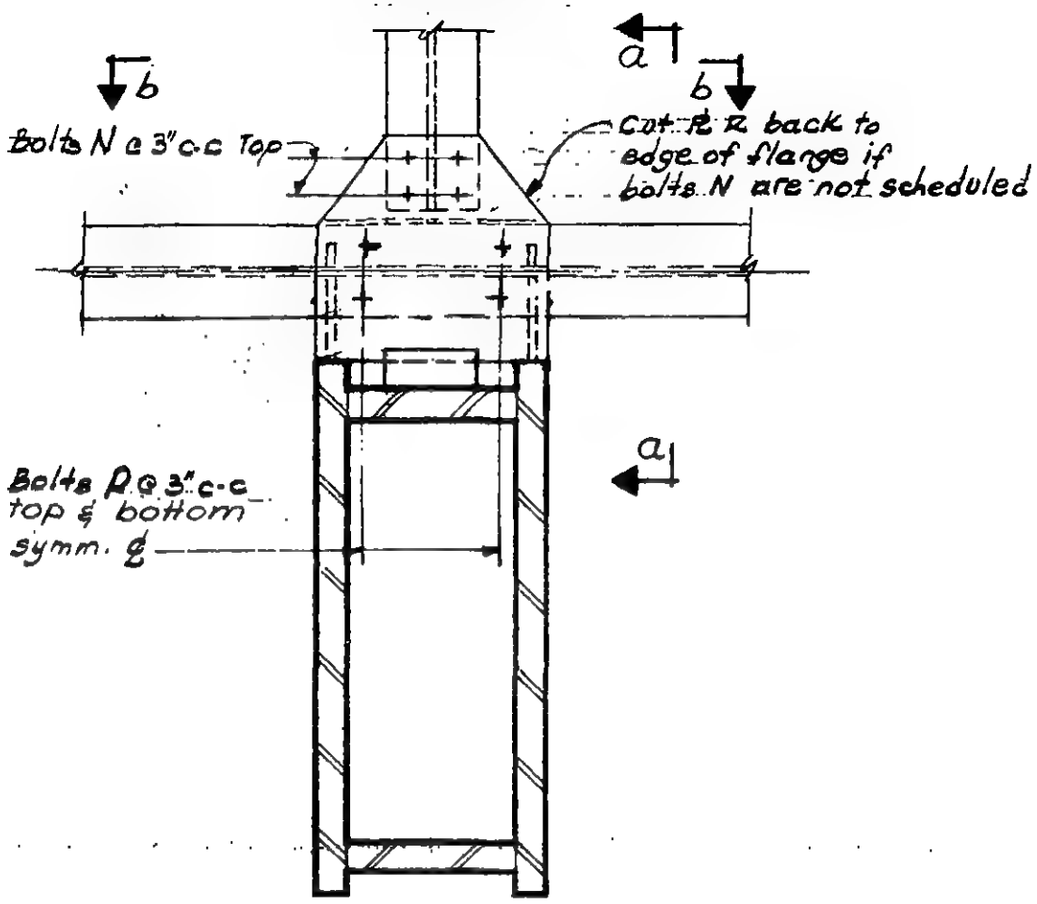

PLAN

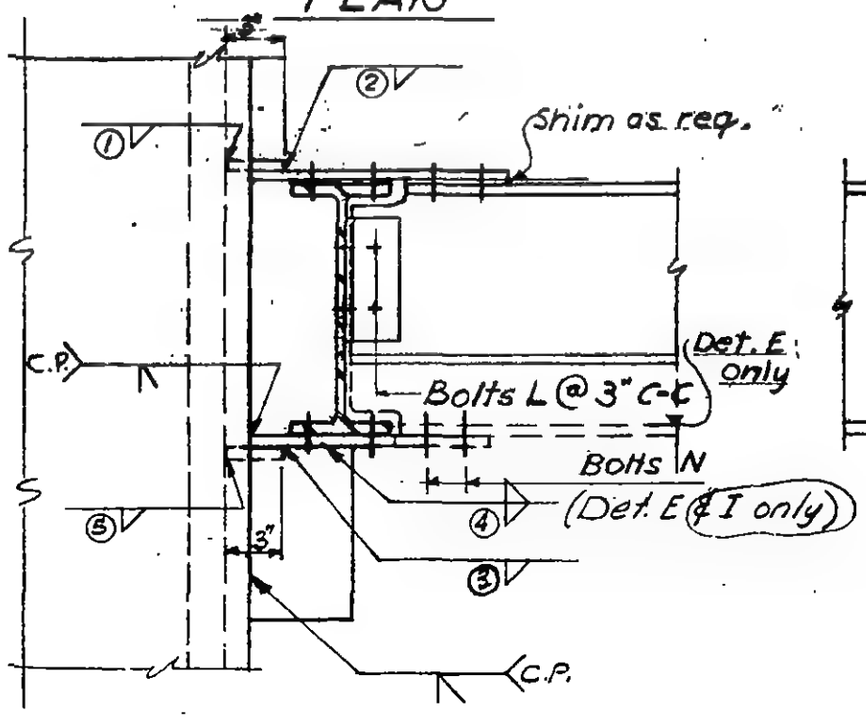

SECTION a-a

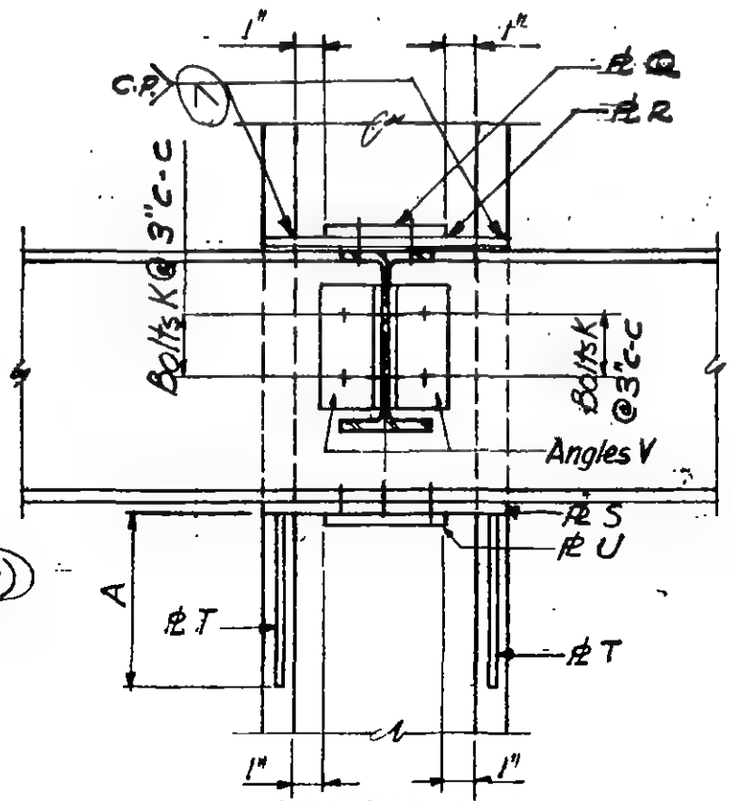

SECTION b-b

LICENSED PROFESSIONAL ENGINEER — LESLIE E. ROBERTSON — No. 34960 — UNIVERSITY OF THE STATE OF NEW YORK

6-ABI-1172

WORTHINGTON, SKILLING, HELLE & JACKSON — Civil & Structural Engineers

PROJECT: THE WORLD TRADE CENTER | TITLE: CONNECTION DETAIL 3/0 B, C, D, E, F, G | DATE: 7-28-67

VISIONS

10-2-67

12-8-67

Use alt. for
beam no. 857
col. 906 elev. 284'
& beam no. 1811
col. 904 elev. 284

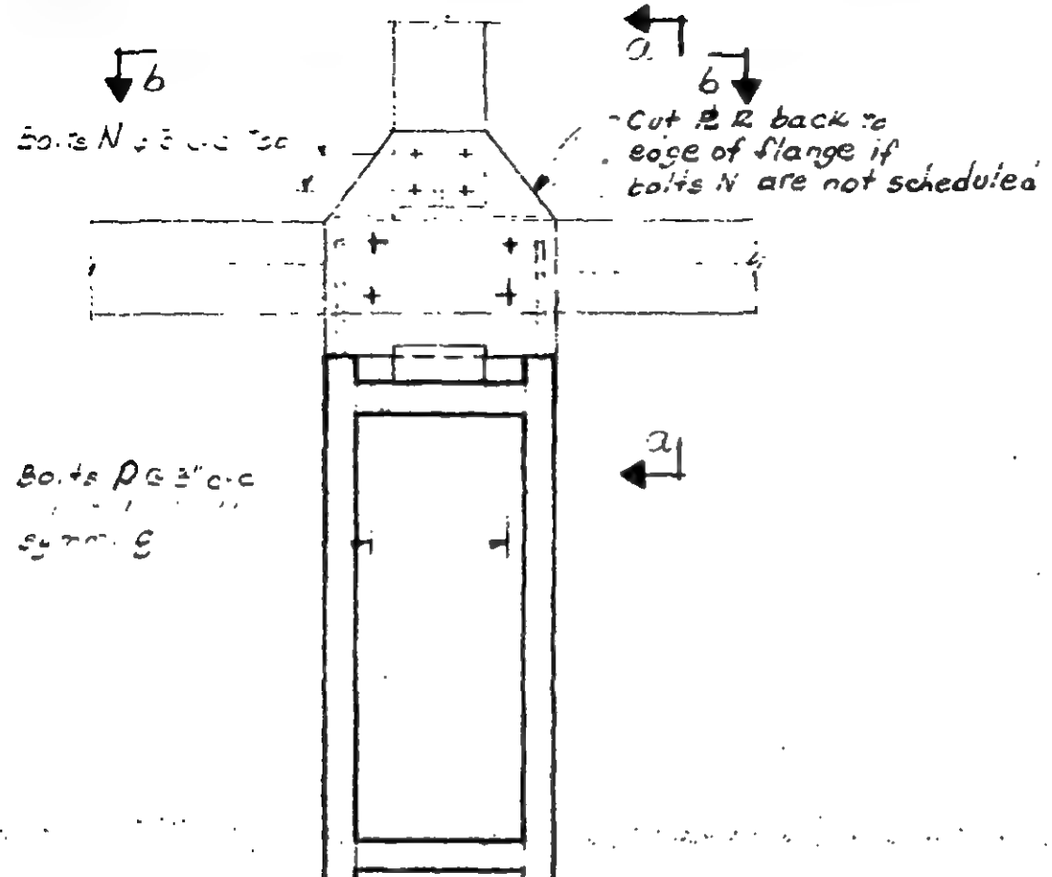

PLAN

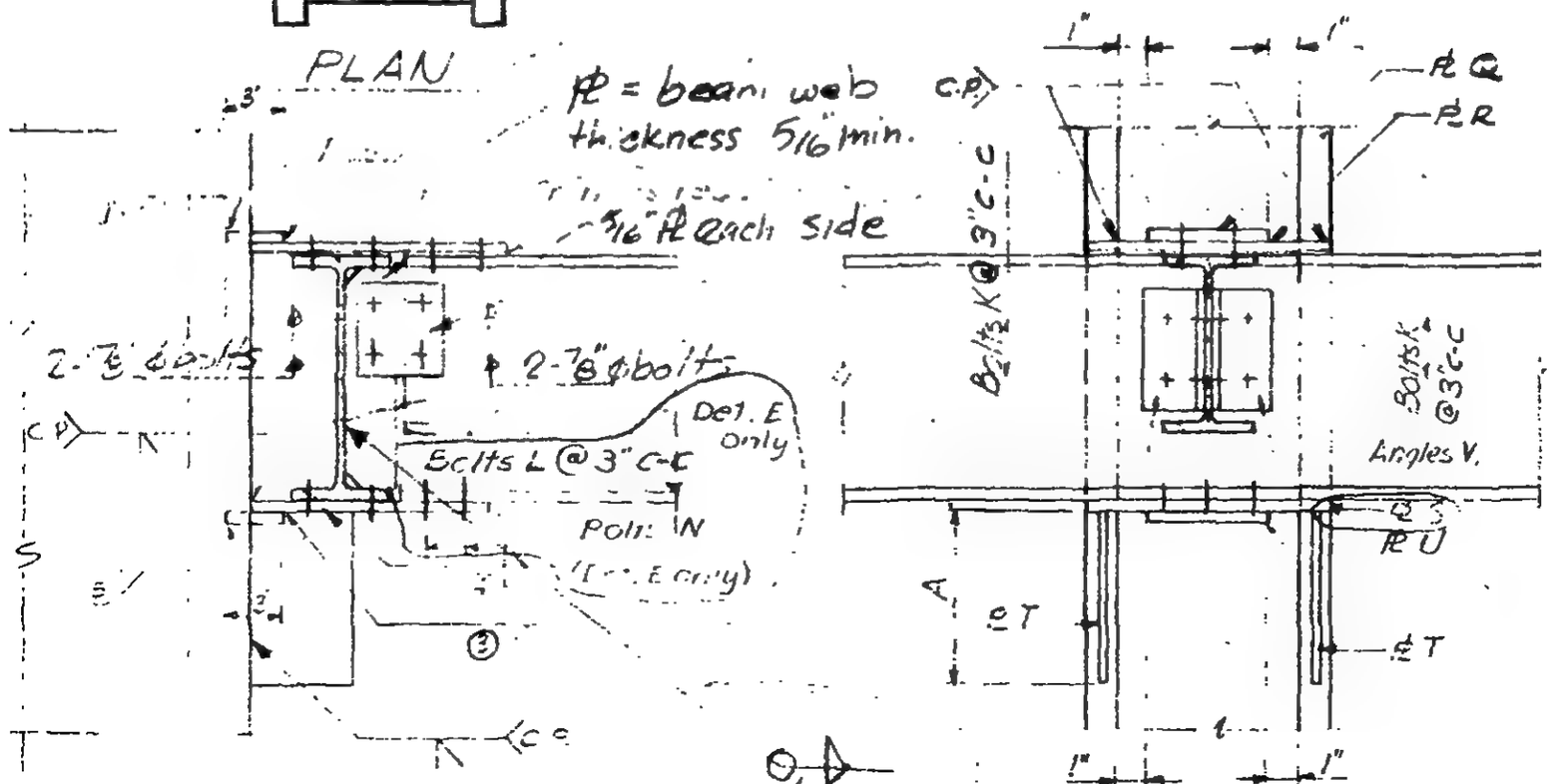

SECTION a-a

SECTION b-b

Alternate
C-4B1-1172

REGISTERED PROFESSIONAL ENGINEER
LESLIE E. ROBERTSON
No. 34360
CITY OF THE STATE OF NEW YORK

SKILLING - HELLE - CHRISTIANSEN - ROBERTSON Structural & Civil Engineers

PROJECT THE WORLD TRADE CENTER | TITLE SCHEDULE FOR DETAIL 3106/I | DATE 10-2-67

REVISIONS

2-9-68

REF. DWGS.	6-ABI-117.2	6-ABI-117.2
	3106	3101
PLATES		
P	—	—
Q	3/8	3/8
R	5/8"	1"
S	1/2"	1"
T	1/2"	7/8"
U	—	3/8"
ANGLES		
V	4 - 3 1/2 x 5/16	4 x 3 1/2 x 3/8
DIMENSIONS		
A	1'-2"	1'-2"
BOLTS		
K	3 - 3/4" ϕ	3 - 7/8" ϕ
L	3 - 3/4" ϕ	3 - 7/8" ϕ
M	—	—
N	4 - 7/8" ϕ	8 - 7/8" ϕ
P	4 - 3/4" ϕ	8 - 7/8" ϕ
WELDS		
①	5/16	3/8
②	5/16	3/8
③	—	3/8
④	3/8	5/16
⑤	—	3/8

LICENSED PROFESSIONAL ENGINEER LESLIE E. ROBERTSON No. 34360 UNIVERSITY OF THE STATE OF NEW YORK

6-ABI-117.3

SKILLING - HELLE - CHRISTIANSEN - ROBERTSON Structural & Civil Engineers

PROJECT THE WORLD TRADE CENTER | TITLE CONNECTION DETAIL 310 J | DATE 4-17-68

REVISIONS

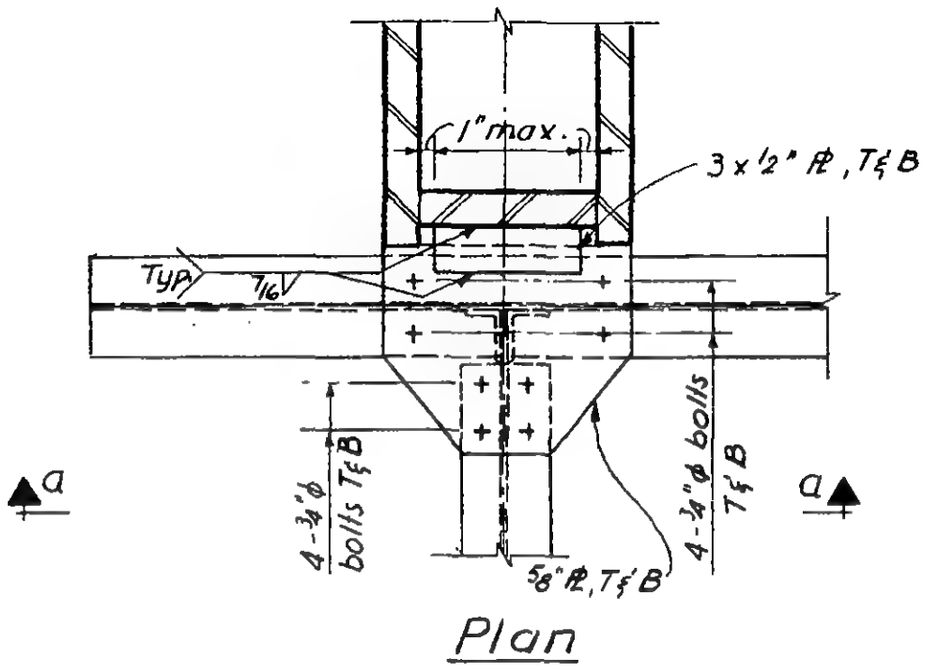

Plan

Wherever suitable reuse previously scheduled (Detail 310E) plates and bolts.

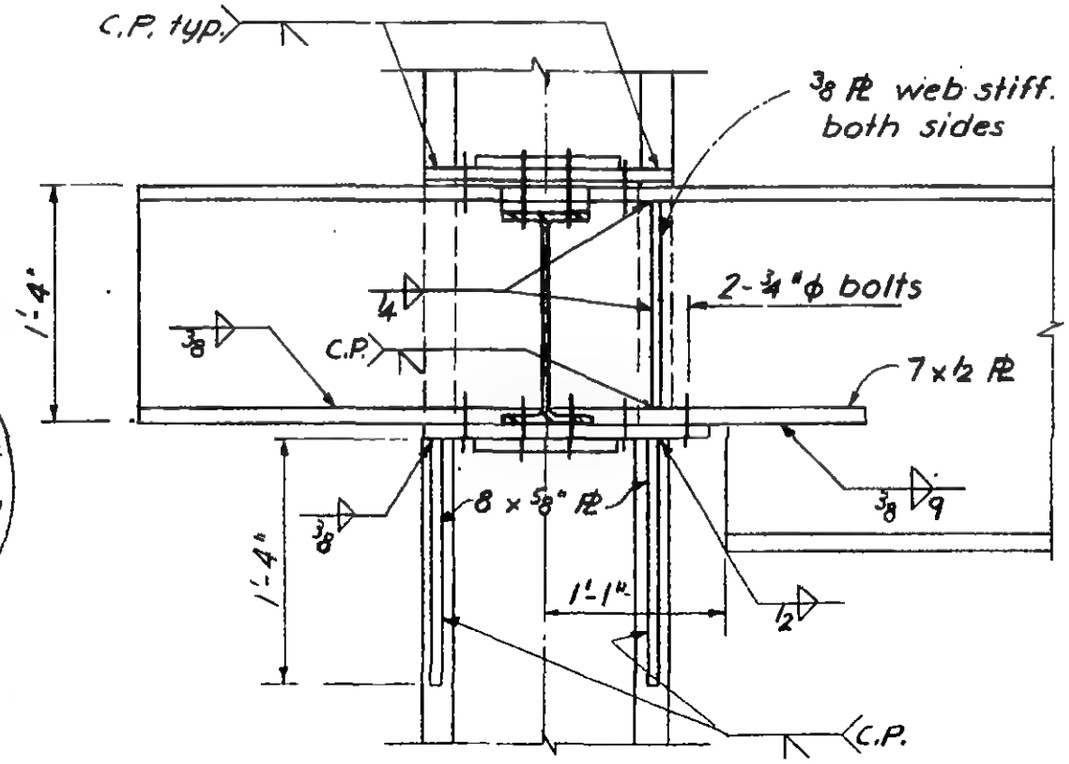

Section a-a

LICENSED PROFESSIONAL ENGINEER LESLIE E. ROBERTSON No. 34360 STATE OF NEW YORK

6-AB1-117.4

WORTHINGTON, SKILLING, HELLE & JACKSON — Civil & Structural Engineers

PROJECT: THE WORLD TRADE CENTER | TITLE: CONNECTION DETAIL 311 A, B, C, D | DATE: 6-5-67

REVISIONS

9-15-67
10-5-67
11-10-67

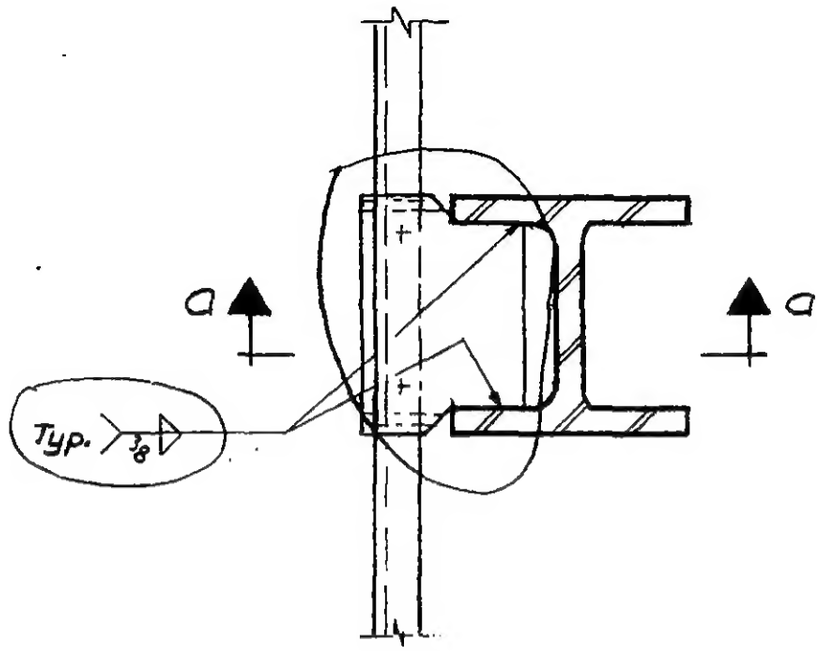

Plan (A)

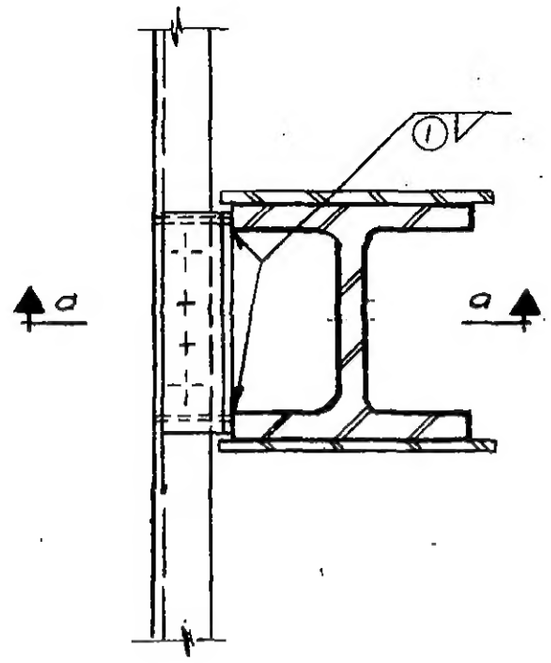

Plan (B,C,D)

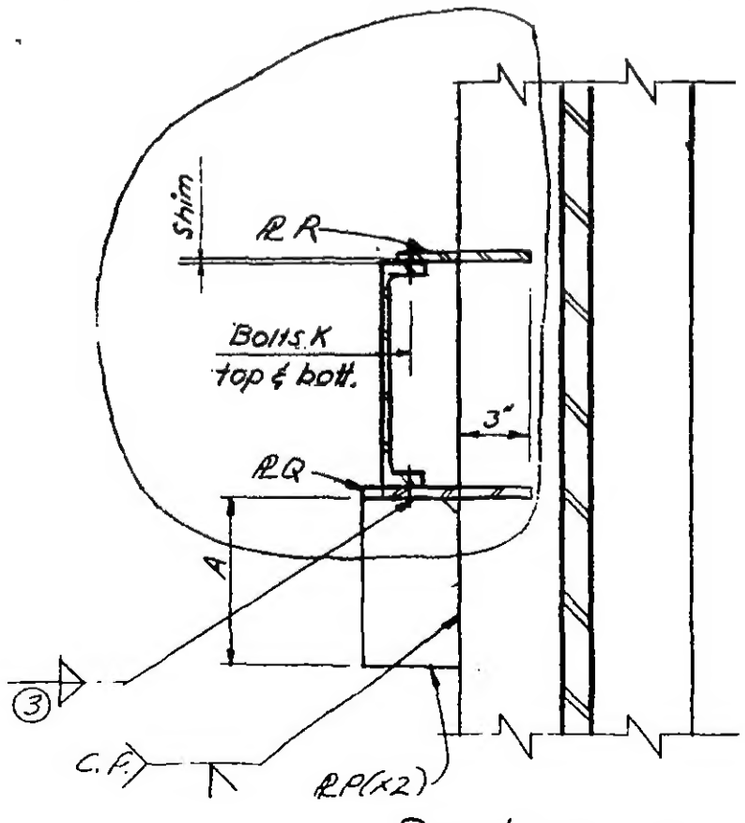

Section a-a

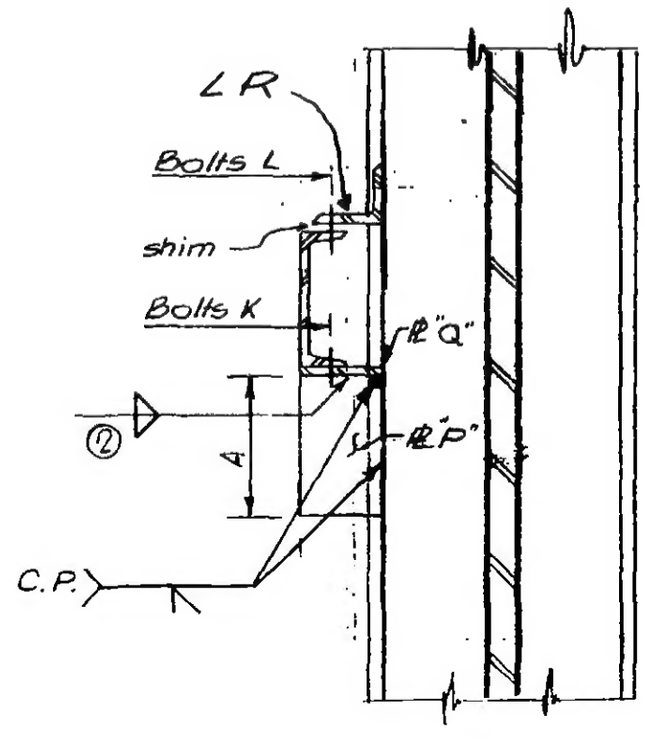

Section a-a

6-AB1-118

SKILLING - HELLE - CHRISTIANSEN - ROBERTSON Structural & Civil Engineers

PROJECT THE WORLD TRADE CENTER | TITLE SCHEDULE FOR DETAIL 311 A, B, C, D | DATE 9-15-67

REVISIONS
10-5-67
11-10-67

	311 A	311 B	311 C	311 D
PLATES				
P	6" x 5/8"	3/4"	3/4"	5/8"
Q	5/8"	3/4"	3/4"	5/8"
R	5/8"	—	—	—
ANGLES R	—	5 x 3 x 3/8	5 x 3 x 3/8	5 x 3 x 3/8
DIMENSION				
L	1'-[illegible]"	0'-10"	0'-11"	1'-0"
BOLTS				
K	4 - 1" ϕ	4 - 3/4" ϕ	4 - 3/4" ϕ	4 - 3/4" ϕ
L	—	2 - 3/4" ϕ	2 - 3/4" ϕ	2 - 3/4" ϕ
WELDS				
①	5/16"	1/4"	1/4"	1/4"
②	5/16"	5/16"	5/16"	5/16"
③	5/16"	—	—	—

LICENSED PROFESSIONAL ENGINEER
LESLIE E. ROBERTSON
No. 34360
UNIVERSITY OF THE STATE OF NEW YORK

G-ABI-118.1

WORTHINGTON, SKILLING, HELLE & JACKSON — Civil & Structural Engineers

PROJECT: THE WORLD TRADE CENTER | TITLE: CONNECTION DETAIL 3/2 A | DATE: 6-12-67

REVISIONS
7-28-67

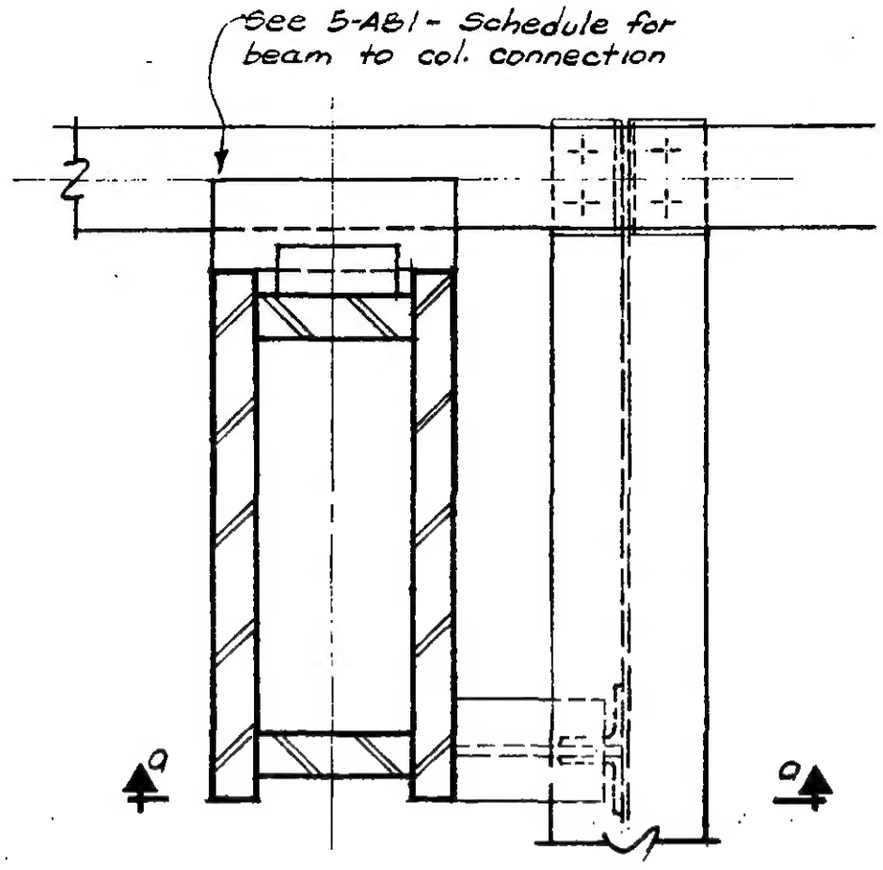

PLAN

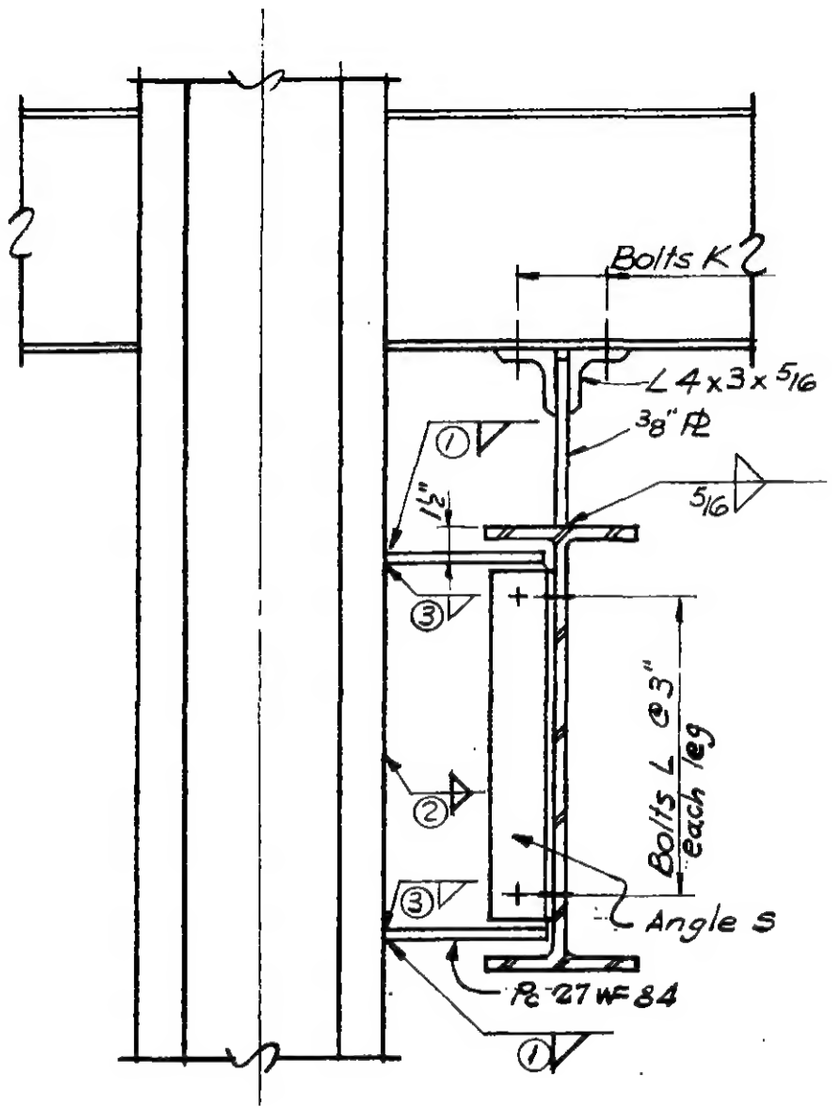

SECTION a-a

LICENSED PROFESSIONAL ENGINEER
LESLIE E. ROBERTSON
No. 34360
UNIVERSITY OF THE STATE OF NEW YORK

6-AB1-119

WORTHINGTON, SKILLING, HELLE & JACKSON — Civil & Structural Engineers

PROJECT THE WORLD TRADE CENTER | TITLE SCHEDULE FOR DETAIL 312A | DATE 7-28-67

REVISIONS

	312 A
ANGLE	
S	4 x 3½ x 5/16
BOLTS	
K	4 - ¾" ø
L	8 - ⅞" ø
WELDS	
①	½
②	7/16
③	½

LICENSED PROFESSIONAL ENGINEER
LESLIE E. ROBERTSON
No. 34360
UNIVERSITY OF THE STATE OF NEW YORK

6-ABI-119.1